SPERRY
FLIGHT SYSTEMS

COMMERCIAL DIVISION
PHOENIX, ARIZONA

Type ADT-222B
Air Data Test System
Part No. 4047505-XXX

Ground Equipment Manual

Volume II of II

REVISED 1 JULY 1982
1 NOVEMBER 1981

PRINTED IN U.S.A.

PUB. NO. 31-4322-03

THIS SHEET LIFTER
MUST BE PLACED ON
TOP OF CONTENTS

GRAPHIC PRODUCTS
Chicago, Illinois 60609

THIS SHEET LATER
MUST BE PLACED ON
TOP OF CONTENTS

GRAPHIC PRODUCTS

SPERRY
FLIGHT SYSTEMS

COMMERCIAL DIVISION
PHOENIX, ARIZONA

Type ADT-222B
Air Data Test System
Part No. 4047505-XXX

Ground Equipment Manual

Volume II of II

PRINTED IN U.S.A.

PUB. NO. 31-4322-03

REVISED 1 JULY 1982
1 NOVEMBER 1981

Honeywell

NOTICE

Products and components identified with the name Sperry are products and components of Honeywell Inc., Sperry Commercial Flight Systems Division, Phoenix, Arizona.

Digitized by the Internet Archive
in 2025

https://archive.org/details/manualsplus_06171

LIST OF EFFECTIVE PAGES FOR VOLUME II

SUBJECT	PAGE	DATE
Title		Jul 1/82
List of Effective Pages		
	1	Jul 1/82
	2	Jul 1/82
	3	Jul 1/82
	4	Dec 7/81
	5	Nov 1/81
	6	Jul 1/82
	7	Jul 1/82
	8	Jul 1/82
	9	Jul 1/82
	10	Jul 1/82
Record of Revisions		Nov 1/81
List of Illustrations		
	1	Nov 1/81
	2	Nov 1/81
	3	Nov 1/81
	4	Nov 1/81
List of Tables		Jul 1/82
MAINTENANCE	4-0	Nov 1/81
Contents	4-0	Nov 1/81
Introduction	4-1	
	1	Nov 1/81
	2 Blank	Nov 1/81
Performance Verification	4-2	
	1	Nov 1/81
	2	Nov 1/81
	3	Jul 1/82
	4 Blank	Jul 1/82
	5	Nov 1/81
	6	Nov 1/81
	7	Nov 1/81
	8	Nov 1/81
	9	Nov 1/81
	10	Nov 1/81
	11	Nov 1/81
	12	Jul 1/82
	13	Nov 1/81
	14	Jul 1/82
	15	Nov 1/81
	16	Nov 1/81
	17	Nov 1/81
	18	Nov 1/81
	19	Jul 1/82
	20	Jul 1/82
	21	Nov 1/81
	22	Nov 1/81
	23	Nov 1/81
	24	Nov 1/81
	25	Jul 1/82
	26	Nov 1/81
	27	Nov 1/81
	28	Nov 1/81
	29	Jul 1/82
	30	Nov 1/81
	31	Nov 1/81
	32	Nov 1/81
	33	Nov 1/81
	34	Nov 1/81
	35	Nov 1/81
	36	Jul 1/82
	37	Nov 1/81
	38	Nov 1/81
	39	Nov 1/81
	40	Nov 1/81
	41	Jul 1/82
	42	Nov 1/81
	43	Nov 1/81
	44	Nov 1/81
	45	Nov 1/81
	46	Nov 1/81
	47	Nov 1/81
	48	Nov 1/81
	49	Nov 1/81

This manual was released for distribution July 25/82.

SUBJECT	PAGE	DATE
Performance Verification (cont)	4-2	
	50	Nov 1/81
	51	Nov 1/81
	52	Jul 1/82
	53	Jul 1/82
	54	Jul 1/82
	55	Jul 1/82
	56	Nov 1/81
	57	Jul 1/82
	58	Nov 1/81
	59	Nov 1/81
	60	Nov 1/81
	61	Nov 1/81
	62	Jul 1/82
	63	Nov 1/81
	64	Nov 1/81
Theory of Operation	4-3	
	1	Nov 1/81
	2	Nov 1/81
	3	Nov 1/81
	4	Nov 1/81
	5	Nov 1/81
	6	Nov 1/81
	7	Nov 1/81
	8 Blank	Nov 1/81
	9	Nov 1/81
	10 Blank	Nov 1/81
	11	Nov 1/81
	12	Nov 1/81
	13	Nov 1/81
	14	Nov 1/81
	15	Nov 1/81
	16	Nov 1/81
	17	Nov 1/81
	18	Nov 1/81
	19	Nov 1/81
	20	Nov 1/81
	21	Nov 1/81
	22 Blank	Nov 1/81
	23	Nov 1/81
	24	Nov 1/81
	25	Nov 1/81
	26 Blank	Nov 1/81
	26.1	Nov 1/81
	26.2 Blank	Nov 1/81
	27	Nov 1/81
	28 Blank	Nov 1/81
	28.1	Nov 1/81
	28.2 Blank	Nov 1/81
	29	Nov 1/81
	30 Blank	Nov 1/81
	30.1	Nov 1/81
	30.2 Blank	Nov 1/81
	31	Nov 1/81
	32 Blank	Nov 1/81
	33	Nov 1/81
	34 Blank	Nov 1/81
	35	Nov 1/81
	36 Blank	Nov 1/81
	37	Nov 1/81
	38 Blank	Nov 1/81
	39	Nov 1/81
	40 Blank	Nov 1/81
	41	Nov 1/81
	42 Blank	Nov 1/81
	43	Nov 1/81
	44	Nov 1/81
	45	Nov 1/81
	46	Nov 1/81
	47	Nov 1/81
	48 Blank	Nov 1/81
	49	Nov 1/81
	50 Blank	Nov 1/81
	51	Nov 1/81
	52	Nov 1/81
	53	Nov 1/81
	54 Blank	Nov 1/81
	55	Nov 1/81
	56 Blank	Nov 1/81
	57	Nov 1/81
	58 Blank	Nov 1/81
	59	Nov 1/81
	60	Nov 1/81
	61	Nov 1/81
	62	Nov 1/81
	63	Nov 1/81
	64 Blank	Nov 1/81
	65	Nov 1/81
	66 Blank	Nov 1/81
	67	Nov 1/81
	68	Nov 1/81
	69	Nov 1/81
	70 Blank	Nov 1/81
	71	Nov 1/81
	72 Blank	Nov 1/81
	73	Nov 1/81
	74 Blank	Nov 1/81
	75	Nov 1/81
	76	Nov 1/81

SUBJECT	PAGE	DATE
Theory of Operation (cont)	4-3	
	77	Nov 1/81
	78	Nov 1/81
	79	Nov 1/81
	80 Blank	Nov 1/81
Troubleshooting	4-4	
	1	Nov 1/81
	2	Nov 1/81
	3	Nov 1/81
	4	Nov 1/81
	5	Nov 1/81
	6	Jul 1/82
	7	Jul 1/82
	8	Jul 1/82
	9	Nov 1/81
	10	Nov 1/81
	11	Nov 1/81
	12	Nov 1/81
	13	Nov 1/81
	14 Blank	Nov 1/81
	15	Nov 1/81
	16 Blank	Nov 1/81
	17	Nov 1/81
	18 Blank	Nov 1/81
	19	Nov 1/81
	20 Blank	Nov 1/81
	21	Nov 1/81
	22 Blank	Nov 1/81
	23	Nov 1/81
	24 Blank	Nov 1/81
	25	Nov 1/81
	26 Blank	Nov 1/81
	27	Nov 1/81
	28 Blank	Nov 1/81
	29	Nov 1/81
	30 Blank	Nov 1/81
	31	Nov 1/81
	32 Blank	Nov 1/81
	33	Nov 1/81
	34 Blank	Nov 1/81
	35	Nov 1/81
	36 Blank	Nov 1/81
	37	Nov 1/81
	38 Blank	Nov 1/81
	39	Nov 1/81
	40 Blank	Nov 1/81
	41	Nov 1/81
	42 Blank	Nov 1/81
	43	Nov 1/81
	44 Blank	Nov 1/81
	45	Nov 1/81
	46 Blank	Nov 1/81
	47	Nov 1/81
	48 Blank	Nov 1/81
	49	Nov 1/81
	50 Blank	Nov 1/81
	51	Nov 1/81
	52 Blank	Nov 1/81
	53	Nov 1/81
	54 Blank	Nov 1/81
	55	Nov 1/81
	56 Blank	Nov 1/81
	57	Nov 1/81
	58 Blank	Nov 1/81
	59	Nov 1/81
	60 Blank	Nov 1/81
	61	Nov 1/81
	62 Blank	Nov 1/81
	63	Nov 1/81
	64 Blank	Nov 1/81
	65	Nov 1/81
	66 Blank	Nov 1/81
	67	Nov 1/81
	68 Blank	Nov 1/81
	69	Nov 1/81
	70 Blank	Nov 1/81
	71	Nov 1/81
	72 Blank	Nov 1/81
	73	Nov 1/81
	74 Blank	Nov 1/81
	75	Nov 1/81
	76 Blank	Nov 1/81
	77	Nov 1/81
	78 Blank	Nov 1/81
	79	Nov 1/81
	80 Blank	Nov 1/81
	81	Nov 1/81
	82 Blank	Nov 1/81
	83	Nov 1/81
	84 Blank	Nov 1/81
	85	Nov 1/81
	86 Blank	Nov 1/81
	87	Nov 1/81
	88 Blank	Nov 1/81
	89	Nov 1/81
	90 Blank	Nov 1/81
	91	Nov 1/81

SUBJECT	PAGE	DATE
Troubleshooting (cont)	4-4	
	92 Blank	Nov 1/81
	93	Nov 1/81
	94 Blank	Nov 1/81
	95	Nov 1/81
	96 Blank	Nov 1/81
	97	Nov 1/81
	98 Blank	Nov 1/81
	99	Nov 1/81
	100 Blank	Nov 1/81
	101	Nov 1/81
	102 Blank	Nov 1/81
	103	Nov 1/81
	104 Blank	Nov 1/81
	105	Nov 1/81
	106 Blank	Nov 1/81
	107	Nov 1/81
	108 Blank	Nov 1/81
	109	Nov 1/81
	110 Blank	Nov 1/81
	111	Nov 1/81
	112 Blank	Nov 1/81
	113	Nov 1/81
	114 Blank	Nov 1/81
	115	Nov 1/81
	116 Blank	Nov 1/81
	117	Nov 1/81
	118 Blank	Nov 1/81
	119	Nov 1/81
	120 Blank	Nov 1/81
	121	Nov 1/81
	122 Blank	Nov 1/81
	123	Dec 7/81
	124 Blank	Dec 7/81
	125	Nov 1/81
	126 Blank	Nov 1/81
	127	Nov 1/81
	128 Blank	Nov 1/81
	129	Nov 1/81
	130 Blank	Nov 1/81
	131	Nov 1/81
	132 Blank	Nov 1/81
	133	Nov 1/81
	134 Blank	Nov 1/81
	134.1 Added	Dec 7/81
	134.2 Blank Added	Dec 7/81
	135	Dec 7/81
	136 Blank	Dec 7/81
	137	Nov 1/81
	138 Blank	Nov 1/81
	139	Nov 1/81
	140 Blank	Nov 1/81
	141	Nov 1/81
	142 Blank	Nov 1/81
	143	Nov 1/81
	144 Blank	Nov 1/81
	145	Nov 1/81
	146 Blank	Nov 1/81
	146.1 Added	Dec 7/81
	146.2 Blank Added	Dec 7/81
	147	Nov 1/81
	148 Blank	Nov 1/81
	149	Nov 1/81
	150 Blank	Nov 1/81
	151	Nov 1/81
	152 Blank	Nov 1/81
	153	Nov 1/81
	154 Blank	Nov 1/81
	155	Nov 1/81
	156 Blank	Nov 1/81
	157	Nov 1/81
	158 Blank	Nov 1/81
	159	Nov 1/81
	160 Blank	Nov 1/81
	161	Nov 1/81
	162 Blank	Nov 1/81
	163	Nov 1/81
	164 Blank	Nov 1/81
	165	Nov 1/81
	166 Blank	Nov 1/81
	167	Nov 1/81
	168 Blank	Nov 1/81
	169	Nov 1/81
	170 Blank	Nov 1/81
	171	Nov 1/81
	172 Blank	Nov 1/81
	173	Nov 1/81
	174 Blank	Nov 1/81
	175	Nov 1/81
	176 Blank	Nov 1/81
	177	Nov 1/81
	178 Blank	Nov 1/81
	179	Nov 1/81
	180 Blank	Nov 1/81
	181	Nov 1/81

SUBJECT	PAGE	DATE
Troubleshooting (cont)	4-4	
	182 Blank	Nov 1/81
	183	Nov 1/81
	184 Blank	Nov 1/81
	184.1	Nov 1/81
	184.2 Blank	Nov 1/81
	185	Nov 1/81
	186 Blank	Nov 1/81
	187	Nov 1/81
	188 Blank	Nov 1/81
	189	Nov 1/81
	190 Blank	Nov 1/81
	191	Nov 1/81
	192	Nov 1/81
	193	Nov 1/81
	194	Nov 1/81
	195	Nov 1/81
	196	Nov 1/81
	197	Nov 1/81
	198	Nov 1/81
	199	Nov 1/81
	200	Nov 1/81
	201	Nov 1/81
	202	Nov 1/81
	203	Nov 1/81
	204	Nov 1/81
	205	Nov 1/81
	206	Nov 1/81
	207	Nov 1/81
	208	Nov 1/81
	209	Nov 1/81
	210	Nov 1/81
	211	Nov 1/81
	212	Nov 1/81
	213	Nov 1/81
	214	Nov 1/81
	215	Nov 1/81
	216	Nov 1/81
	217	Nov 1/81
	218	Nov 1/81
	219	Nov 1/81
	220	Nov 1/81
	221	Nov 1/81
	222	Nov 1/81
	223	Nov 1/81
	224	Nov 1/81
	225	Nov 1/81
	226	Nov 1/81
	227	Nov 1/81
	228	Nov 1/81
	229	Nov 1/81
	230	Nov 1/81
	231	Nov 1/81
	232	Nov 1/81
	233	Nov 1/81
	234	Nov 1/81
	235	Nov 1/81
	236	Nov 1/81
	237	Nov 1/81
	238	Nov 1/81
	239	Nov 1/81
	240	Nov 1/81
	241	Nov 1/81
	242	Nov 1/81
	243	Nov 1/81
	244	Nov 1/81
	245	Nov 1/81
	246	Nov 1/81
	247	Nov 1/81
	248	Nov 1/81
	249	Nov 1/81
	250	Nov 1/81
	251	Nov 1/81
	252	Nov 1/81
	253	Nov 1/81
	254	Nov 1/81
	255	Nov 1/81
	256	Nov 1/81
	257	Nov 1/81
	258	Nov 1/81
	259	Nov 1/81
	260	Nov 1/81
	261	Nov 1/81
	262	Nov 1/81
	263	Nov 1/81
	264	Nov 1/81
	265	Nov 1/81
	266	Nov 1/81
	267	Nov 1/81
	268	Nov 1/81
	269	Nov 1/81
	270	Nov 1/81
	271	Nov 1/81
	272	Nov 1/81
	273	Nov 1/81

SUBJECT	PAGE	DATE
Troubleshooting (cont)	4-4	
	274	Nov 1/81
	275	Nov 1/81
	276	Nov 1/81
	277	Nov 1/81
	278	Nov 1/81
	279	Nov 1/81
	280	Nov 1/81
	281	Nov 1/81
	282	Nov 1/81
	283	Nov 1/81
	284	Nov 1/81
	285	Nov 1/81
	286	Nov 1/81
	287	Nov 1/81
	288	Nov 1/81
	289	Nov 1/81
	290	Nov 1/81
	291	Nov 1/81
	292	Nov 1/81
	293	Nov 1/81
	294	Nov 1/81
	295	Nov 1/81
	296	Nov 1/81
	297	Nov 1/81
	298	Nov 1/81
	299	Nov 1/81
	300	Nov 1/81
	301	Nov 1/81
	302	Nov 1/81
	303	Nov 1/81
	304	Nov 1/81
	305	Nov 1/81
	306	Nov 1/81
	307	Nov 1/81
	308	Nov 1/81
	309	Nov 1/81
	310	Nov 1/81
	311	Nov 1/81
	312	Nov 1/81
	313	Nov 1/81
	314	Nov 1/81
	315	Nov 1/81
	316	Nov 1/81
	317	Nov 1/81
	318	Nov 1/81
	319	Nov 1/81
	320	Nov 1/81
	321	Nov 1/81
	322	Nov 1/81
	323	Nov 1/81
	324	Nov 1/81
	325	Nov 1/81
	326	Nov 1/81
	327	Nov 1/81
	328	Nov 1/81
	329	Nov 1/81
	330	Nov 1/81
	331	Nov 1/81
	332	Nov 1/81
Adjustment and Calibration	4-5	
	1	Jul 1/82
	2 Blank	Jul 1/82
	3 Added	Jul 1/82
	4 Added	Jul 1/82
	5 Added	Jul 1/82
	6 Added	Jul 1/82
	7 Added	Jul 1/82
	8 Added	Jul 1/82
	9 Added	Jul 1/82
	10 Added	Jul 1/82
	11 Added	Jul 1/82
	12 Added	Jul 1/82
	13 Added	Jul 1/82
	14 Added	Jul 1/82
	15 Added	Jul 1/82
	16 Added	Jul 1/82
	17 Added	Jul 1/82
	18 Added	Jul 1/82
	19 Added	Jul 1/82
	20 Added	Jul 1/82
	21 Added	Jul 1/82
	22 Added	Jul 1/82
	23 Added	Jul 1/82
	24 Added	Jul 1/82
	25 Added	Jul 1/82
	26 Added	Jul 1/82
	27 Added	Jul 1/82
	28 Added	Jul 1/82
	29 Added	Jul 1/82
	30 Added	Jul 1/82
	31 Added	Jul 1/82
	32 Added	Jul 1/82

SUBJECT	PAGE	DATE
Adjustment and Calibration (cont)	4-5	
	33 Added	Jul 1/82
	34 Added	Jul 1/82
	35 Added	Jul 1/82
	36 Added	Jul 1/82
	37 Added	Jul 1/82
	38 Added	Jul 1/82
	39 Added	Jul 1/82
	40 Added	Jul 1/82
	41 Added	Jul 1/82
	42 Added	Jul 1/82
	43 Added	Jul 1/82
	44 Added	Jul 1/82
	45 Added	Jul 1/82
	46 Added	Jul 1/82
	47 Added	Jul 1/82
	48 Added	Jul 1/82
	49 Added	Jul 1/82
	50 Added	Jul 1/82
	51 Added	Jul 1/82
	52 Added	Jul 1/82
	53 Added	Jul 1/82
	54 Added	Jul 1/82
	55 Added	Jul 1/82
	56 Added	Jul 1/82
	57 Added	Jul 1/82
	58 Added	Jul 1/82
	59 Added	Jul 1/82
	60 Added	Jul 1/82
	61 Added	Jul 1/82
	62 Added	Jul 1/82
	63 Added	Jul 1/82
	64 Added	Jul 1/82
	65 Added	Jul 1/82
	66 Added	Jul 1/82
	67 Added	Jul 1/82
	68 Added	Jul 1/82
	69 Added	Jul 1/82
	70 Added	Jul 1/82
	71 Added	Jul 1/82
	72 Added	Jul 1/82
	73 Added	Jul 1/82
	74 Added	Jul 1/82
	75 Added	Jul 1/82
	76 Added	Jul 1/82
	77 Added	Jul 1/82
	78 Added	Jul 1/82
	79 Added	Jul 1/82
	80 Added	Jul 1/82
	81 Added	Jul 1/82
	82 Added	Jul 1/82
	83 Added	Jul 1/82
	84 Added	Jul 1/82
	85 Added	Jul 1/82
	86 Added	Jul 1/82
	87 Added	Jul 1/82
	88 Added	Jul 1/82
	89 Added	Jul 1/82
	90 Added	Jul 1/82
	91 Added	Jul 1/82
	92 Added	Jul 1/82
	93 Added	Jul 1/82
	94 Added	Jul 1/82
	95 Added	Jul 1/82
	96 Added	Jul 1/82
	97 Added	Jul 1/82
	98 Added	Jul 1/82
	99 Added	Jul 1/82
	100 Added	Jul 1/82
Repair	4-6	
	1	Nov 1/81
	2	Nov 1/81
	3	Nov 1/81
	4	Nov 1/81
	5	Nov 1/81
	6	Nov 1/81
	7	Nov 1/81
	8 Blank	Nov 1/81
Special Tools, Fixtures, and Equipment	4-7	
	1	Jul 1/82
	2	Nov 1/81
ILLUSTRATED PARTS LIST	5-0	Nov 1/81
Contents	5-0	Nov 1/81
Introduction	5-1	
	1	Nov 1/81
	2	Nov 1/81

SUBJECT	PAGE	DATE
Introduction (cont)	5-1	
	3	Nov 1/81
	4	Nov 1/81
	5	Nov 1/81
	6	Nov 1/81
	7	Nov 1/81
	8	Nov 1/81
	9	Nov 1/81
	10	Nov 1/81
	11	Nov 1/81
	12	Nov 1/81
	13	Nov 1/81
	14	Nov 1/81
	15	Nov 1/81
	16	Nov 1/81
	17	Nov 1/81
	18 Blank	Nov 1/81
Numerical Index	5-2	
	1	Nov 1/81
	2	Nov 1/81
	3	Nov 1/81
	4	Nov 1/81
	5	Nov 1/81
	6	Nov 1/81
	7	Nov 1/81
	8	Nov 1/81
	9	Nov 1/81
	10	Nov 1/81
	11	Nov 1/81
	12	Nov 1/81
	13	Nov 1/81
	14	Nov 1/81
	15	Nov 1/81
	16	Nov 1/81
	17	Nov 1/81
	18	Nov 1/81
	19	Nov 1/81
	20	Nov 1/81
	21	Nov 1/81
	22	Nov 1/81
	23	Nov 1/81
	24	Nov 1/81
	25	Nov 1/81
	26	Nov 1/81
	27	Nov 1/81
	28	Nov 1/81
	29	Nov 1/81
	30	Nov 1/81
	31	Nov 1/81
	32	Nov 1/81
	33	Nov 1/81
	34	Nov 1/81
	35	Nov 1/81
	36	Nov 1/81
	37	Nov 1/81
	38	Nov 1/81
Equipment Designator Index	5-3	
	1	Nov 1/81
	2	Nov 1/81
	3	Nov 1/81
	4	Nov 1/81
	5	Nov 1/81
	6	Nov 1/81
	7	Nov 1/81
	8	Nov 1/81
	9	Nov 1/81
	10	Nov 1/81
	11	Nov 1/81
	12	Nov 1/81
	13	Nov 1/81
	14	Nov 1/81
	15	Nov 1/81
	16	Nov 1/81
	17	Nov 1/81
	18	Nov 1/81
	19	Nov 1/81
	20	Nov 1/81
Detailed Parts List	5-4	
	1	Nov 1/81
	2	Nov 1/81
	3	Nov 1/81
	4	Jul 1/82
	5	Nov 1/81
	6	Nov 1/81
	7	Nov 1/81
	8	Nov 1/81
	9	Nov 1/81
	10	Jul 1/82
	11	Nov 1/81

SUBJECT	PAGE	DATE
Detailed Parts List (cont)	5-4	
	12	Nov 1/81
	13	Nov 1/81
	14	Jul 1/82
	15	Nov 1/81
	16 Blank	Nov 1/81
	17	Nov 1/81
	18	Nov 1/81
	19	Nov 1/81
	20 Blank	Nov 1/81
	21	Nov 1/81
	22 Blank	Nov 1/81
	23	Nov 1/81
	24	Nov 1/81
	25	Nov 1/81
	26	Jul 1/82
	27	Nov 1/81
	28	Nov 1/81
	29	Nov 1/81
	30	Nov 1/81
	31	Jul 1/82
	32	Nov 1/81
	33	Nov 1/81
	34	Nov 1/81
	35	Nov 1/81
	36	Nov 1/81
	37	Nov 1/81
	38	Nov 1/81
	39	Nov 1/81
	40	Nov 1/81
	41	Nov 1/81
	42	Nov 1/81
	43	Nov 1/81
	44	Nov 1/81
	45	Jul 1/82
	46	Nov 1/81
	47	Nov 1/81
	48	Nov 1/81
	49	Nov 1/81
	50 Blank	Nov 1/81
	51 Blank	Nov 1/81
	52	Nov 1/81
	53	Nov 1/81
	54	Nov 1/81
	55	Nov 1/81
	56	Nov 1/81
	57	Nov 1/81
	58	Nov 1/81
	59	Nov 1/81
	60	Nov 1/81
	61	Jul 1/82
	62	Nov 1/81
	63	Nov 1/81
	64	Nov 1/81
	65	Nov 1/81
	66	Nov 1/81
	67	Nov 1/81
	68	Nov 1/81
	69	Nov 1/81
	70	Nov 1/81
	71	Jul 1/82
	72	Nov 1/81
	73	Nov 1/81
	74	Nov 1/81
	75 Blank	Nov 1/81
	76	Nov 1/81
	77	Nov 1/81
	78	Jul 1/82
	79	Nov 1/81
	80	Nov 1/81
	81	Nov 1/81
	82	Nov 1/81
	83	Nov 1/81
	84	Nov 1/81
	85	Nov 1/81
	86	Nov 1/81
	87	Nov 1/81
	88	Nov 1/81
	89	Nov 1/81
	90	Nov 1/81
	91	Nov 1/81
	92	Nov 1/81
	93	Nov 1/81
	94	Nov 1/81
	95	Nov 1/81
	96 Blank	Nov 1/81
	97 Blank	Nov 1/81
	98	Nov 1/81
	99	Nov 1/81
	100	Nov 1/81
	101	Nov 1/81
	102	Nov 1/81
	103	Nov 1/81
	104	Nov 1/81

SUBJECT	PAGE	DATE
Detailed Parts List (cont)	5-4	
	105	Nov 1/81
	106	Jul 1/82
	107 Blank	Nov 1/81
	108	Nov 1/81
	109	Nov 1/81
	110	Nov 1/81
	111	Nov 1/81
	112	Nov 1/81
	113	Nov 1/81
	114	Nov 1/81
	115	Nov 1/81
	116	Nov 1/81

RECORD OF REVISIONS FOR VOLUME II

Retain this record in front of manual. On receipt of revision, insert revised pages in the manual, and enter revision number, date inserted, and initial.

Revision Number	Revision Date	Insertion Date	By	Revision Number	Revision Date	Insertion Date	By
1	Dec 7/81	Dec 10/81	S				
2	Jul 1/82	Jul 20/82	S				

LIST OF ILLUSTRATIONS
FOR VOLUME II

Figure No.	Title	Chapter/Section	Page
4-1	ADT-222B Simplified Block Diagram	4-3	1
4-2	ADT-222B Pressure Control Valve Schematic	4-3	4
4-3	Pressure Conrol Valve Suspension System	4-3	5
4-4	Vibrating Diaphragm Pressure Sensor	4-3	6
4-5	P_s/P_t Inner Loop Card A12/A13 Block Diagram	4-3	9
4-6	Sensor Response Curve	4-3	11
4-7	Control Valve Flapper - No Contact Gain Curve	4-3	12
4-8	Control Valve Flapper - Inlet Contact Gain Curve	4-3	13
4-9	Control Valve Flapper - Exhaust Gain Curve	4-3	14
4-10	Outer Loop Block Diagram (Simplified)	4-3	17
4-11	Outer Loop Block Diagram	4-3	21
4-12	Altitude/Airspeed (H/V_C) Functional Block Diagram	4-3	25
4-13	P_s/Q_c Functional Block Diagram	4-3	27
4-14	P_s/P_t Functional Block Diagram	4-3	29
4-15	H/V_C Control Mode for P_s Saturation	4-3	31
4-16	P_s/Q_c Control Mode for P_s Saturation	4-3	33
4-17	P_s/P_t Control Mode for P_s Saturation	4-3	35
4-18	H/V_C Control Mode for P_t Saturation	4-3	37
4-19	P_s/Q_c Control Mode for P_t Saturation	4-3	39

Figure No.	Title	Chapter/Section	Page
4-20	P_s/P_t Control Mode for P_t Saturation	4-3	41
4-21	Auto Slew - Example 1	4-3	45
4-22	Auto Slew - Example 2	4-3	46
4-23	Digital Processor Block Diagram	4-3	49
4-24	Processor I/O Block Diagram	4-3	51
4-25	Clock Phase Relationships	4-3	52
4-26	Processor Instruction Formats	4-3	53
4-27	Processor Instruction Operation	4-3	55
4-28	Control and Scratch Pad Card A5 Block Diagram	4-3	57
4-29	Program and Sensor Memory Card A6 Block Diagram	4-3	59
4-30	Control, D/A, and CAD Card A7 Block Diagram	4-3	61
4-31	Scratch Pad/Calibration Memory Card A8 Block Diagram	4-3	63
4-32	Clock and F/C Card A9 Block Diagram	4-3	67
4-33	P_t Inner Loop Card A12 Block Diagram	4-3	71
4-34	P_s Inner Loop Card A13 Block Diagram	4-3	73
4-35	Front Panel Multiplexer Card A14 Block Diagram	4-3	75
4-36	Display Cards A15 and A16 Block Diagram	4-3	77
4-37	Power Supply A17 Block Diagram	4-3	78
4-38	Test Point Locations (A12 and A13)	4-4	2
4-39	Timing and Control Card A1 Schematic	4-4	15
4-40	Program Control Card A2 Schematic	4-4	25

Figure No.	Title	Chapter/Section	Page
4-41	Arithmetic A/B Card A3, A4 Schematic	4-4	35
4-42	Control and Scratch Pad Card A5 Schematic	4-4	51
4-43	Program and Sensor Memory Card A6 Schematic	4-4	61
4-44	Control, D/A, and CAD Card A7 Schematic	4-4	79
4-45	Scratch Pad/Calibration Memory Card A8 Schematic	4-4	89
4-46	Clock and F/C Card A9 Schematic	4-4	113
4-47	P_t Inner Loop Card A12 Schematic	4-4	123
4-48	P_s Inner Loop Card A13 Schematic	4-4	135
4-49	Front Panel Multiplexer Card A14 Schematic	4-4	147
4-50	Display Card A15, A16 Schematic	4-4	169
4-51	Power Supply A17 Schematic	4-4	175
4-52	Sensor Assembly Card A18, A19 Schematic	4-4	185
4-53	Calibration Cable	4-7	2
5-1	Air Data Tester Assembly	5-4	1
5-2	Air Data Tester Assembly	5-4	5
5-3	Front Panel Assembly	5-4	15
5-4	Front Panel Multiplex Electronic Components Assembly	5-4	21
5-5	Display Assembly	5-4	26
5-6	Display Circuit Card Assembly	5-4	27
5-7	Manifold Assembly	5-4	30
5-8	Manifold Assembly	5-4	32
5-9	Rack	5-4	34
5-10	Card Rack Holder	5-4	37

Figure No.	Title	Chapter/Section	Page
5-11	Power Supply	5-4	39
5-12	Heat Sink Electronic Components Assembly	5-4	44
5-13	TR Electronic Components Assembly	5-4	48
5-14	Power Supply Circuit Card Assembly	5-4	52
5-15	Test Rear Panel	5-4	60
5-16	Power Cord Assembly	5-4	64
5-17	Timing Control Circuit Card Assembly	5-4	66
5-18	Program Control Circuit Card Assembly	5-4	68
5-19	Arithmetic A or B Circuit Card Assembly	5-4	70
5-20	Control and Scratch Pad Circuit Card Assembly	5-4	72
5-21	Program and Sensor Memory Board CCA	5-4	76
5-22	Control and D/A and Central Address Circuit Card Assembly	5-4	80
5-23	Scratch Pad/Cal Memory Circuit Card Assembly	5-4	84
5-24	Clock/Freq to Count Circuit Card Assembly	5-4	88
5-25	ASCII Interface Option	5-4	92
5-26	P_t Inner Loop Circuit Card Assembly	5-4	98
5-27	P_s Inner Loop Circuit Card Assembly	5-4	108

LIST OF TABLES FOR VOLUME II

Table No.	Title	Chapter/Section	Page
4-1	Schwien Manometer Specifications	4-2	2
4-2	ADT-222B Specifications	4-2	2
4-3	ADT-321 Specifications	4-2	3
4-4	Integrated Test Specification	4-2	5
4-5	Gain Curve Determinants	4-3	15
4-6	Bit Function Assignments	4-3	15
4-7	Switch Gain Multipliers	4-3	16
4-8	Level 1 Troubleshooting: Self Test	4-4	3
4-9	Level 1 Troubleshooting: Measure Mode	4-4	5
4-10	Level 1 Troubleshooting: Control Mode	4-4	7
4-11	Sensor Connections	4-4	9
4-12	Command Switch Continuity	4-4	13
4-13	Card Rack Wire List	4-4	141
4-14	Power Supply Wire List	4-4	266
4-15	Display Wire List	4-4	284
4-16	Front Panel Assembly Wire List	4-4	288
4-17	Calibration Procedures	4-5	3
4-18	Recommended Spare Subassemblies	4-6	1
4-19	Materials	4-6	2
4-20	Valve Electrical Terminations	4-6	6
5-1	List of Manufacturers	5-1	3
5-2	Optional Part Number Sources	5-1	9

CHAPTER 4
MAINTENANCE

CHAPTER 4
MAINTENANCE

Table of Contents

Chapter-Section	Subject	Page
4-1	INTRODUCTION	1
4-2	PERFORMANCE VERIFICATION	
	1. Verification Interval	1
	2. Test Equipment Accuracy	1
	3. Test Procedure	3
4-3	THEORY OF OPERATION	
	1. General	1
	2. Functional Operation	4
	3. Detailed Operation	47
4-4	TROUBLESHOOTING	
	1. General	1
	2. Level 1 Fault Isolation	1
	3. Level 2 Fault Isolation	9
	4. Schematic Diagrams	13
	5. Wire Lists	189
4-5	ADJUSTMENT AND CALIBRATION	
	1. General	1
	2. Calibration Procedures	1
4-6	REPAIR	
	1. Recommended Spare Parts	1
	2. Disassembly	2
	3. Repair	4
	4. Assembly	5
4-7	SPECIAL TOOLS, FIXTURES, AND TEST EQUIPMENT	1

Section 1. Introduction

This manual assumes no specific maintenance philosophy. The user should decide to what extent he should test, calibrate, repair, and provision the ADT-222B based on his assessment of his available resources and his usage of the system.

The ADT-222B should be tested periodically in accordance with section 2 of this chapter, and calibrated as necessary to correct out-of-tolerance conditions discovered during testing. If a failure is detected, either by BIT or during the performance verification tests, refer to section 4 of this chapter for troubleshooting procedures to isolate faults to the malfunctioning circuit or subassembly. The troubleshooting procedures indicate what additional diagnostic tests and calibration or repair actions are necessary to correct the fault.

PRODUCTION CRITICAL

Sperry has identified as PRODUCTION CRITICAL continuity between terminal E6 (see 5-5, figure 5-2, item 79) and ADT-222B chassis. If, in the course of maintenance, the nut securing terminal is loosened, it must be retightened to a torque of 8 pound-inches. This prevents a condition that may cause electrical shock by ensuring that chassis is grounded.

Sperry does not specify a finite verification cycle for the ADT-222B, as most customers prefer to establish their own. The verification period is normally derived by each customer, considering any unique test requirements and his experience with the equipment. As a baseline, Sperry recommends that the equipment be checked upon initial installation and rechecked on a 30-day cycle until the user obtains sufficient confidence to extend the period.

Section 2. Performance Verification

1. Verification Interval

To maintain a high level of confidence that the ADT-222B is performing in accordance with the specifications, it is necessary to perform periodic verification tests of the system's performance. Determine the verification intervals commensurate with your usage of the ADT-222B and your required level of confidence. A drift rate of accuracy specification over a 90-day period has been established for the ADT-222B sensors; Sperry guarantees that the system retains the accuracy specified in Chapter 1, section 3 for a period of 6 months after delivery. It is recommended that during your initial 6 months operation of the ADT-222B, you conduct the performance verification tests every 30 days and retain the test records. By comparing the shifts in test data over this period, you can establish the drift rate for your system and adjust the test interval to fit your requirements.

2. Test Equipment Accuracy

The performance specifications listed in Chapter 1, section 3 can only be maintained if you use the Schwien manometer specified by the test and calibration procedures. If a slight degradation of the accuracy specifications is acceptable to your requirements, however, other test equipment can be used to test and calibrate the ADT-222B. Keep in mind that the accuracy of the ADT-222B is only as good as the equipment used to calibrate it.

NOTICE

Limiting the accuracy verification to the pressure ranges required for UUT test does not affect performance of the ADT-222B in any way and does not affect the equipment's guarantee, when operated within the established ranges.

Accuracy verification and minor calibration of P_S and P_t pressure only over the ranges required to support the UUT (air data computer, etc) will reduce both verification and calibration times. Verification of the ADT-222B can be accomplished using the procedures presented in this manual, but excluding the pressure test points outside the required ranges. A nameplate listing the ranges over which the accuracy is verified should be located on the front panel in a prominent place.

Either another ADT-222B or a Sperry ADT-321 Air Data Pressure Standard can be used for the calibration of your ADT-222B with only slight degradation of the accuracy specifications.

If another ADT-222B, or an ADT-321, is to be used to test and calibrate your system, it should be used as a transfer standard. The transfer standard is first calibrated on the specified pressure standard (Schwien manometer) and is then used to calibrate your ADT-222B. The most important factor in the

performance of a transfer standard is its capability to repeat measurements. Regardless of its specified accuracy, if the transfer standard has high repeatability (low error between separate measurements of the same pressure), it can be used with its calibration charts to achieve a measurement accuracy approaching that of the Schwien manometer.

For the sake of comparison, the specifications for the Schwien manometer are listed in table 4-1. The applicable specifications for the ADT-222B and ADT-321 are listed in tables 4-2 and 4-3, respectively.

If an ADT-222B is used to test or calibrate your system, it can be used in exactly the same way as the Schwien manometer. The test and calibration procedures are the same. If an ADT-321 is used, however, the procedures are not the same. Since the ADT-321 is a measurement device only, your system must provide the pressure control to obtain the pressures specified in the procedures. To do this, you have to operate your system so that the required value is displayed on the ADT-321. In all other aspects, the procedure is the same.

Schwien Precision Manometer Model 1025EX100
Schwien Engineering Inc

Range	0.3 to 100.0 inch Hg
Accuracy	±0.0003 inch Hg ± 0.003% of reading
Resolution	±0.0001 inch Hg
Offset	±0.0005 inch Hg (automatic null) Zero (manual null at pressure)

Schwien Manometer Specifications
Table 4-1

Display Units	Range	Accuracy	Repeatability
P_s (inches Hg)	0.32 to 40.000	±0.003	±0.0015
Pt (inches Hg)	0.500 to 32.000	±0.003	±0.0015
	32.001 to 65.000	±0.004	±0.002
	65.001 to 90.000	±0.006	±0.003
	90.001 to 100.000	±0.010	±0.005
Resolution (P_s and Pt)		0.001 inch Hg	

ADT-222B Specifications
Table 4-2

Display Units	Range	Accuracy	Repeatability
P_s (inches Hg)	0.32 to 32.000	±0.002	±0.001
P_t (inches Hg)	0.500 to 60.000 60.000 to 90.000	±0.004 ±0.005	±0.002 ±0.0025
Resolution (P_s and P_t)	0.001 inch Hg		

ADT-321 Specifications
Table 4-3

3. Test Procedure

The performance verification test procedure is contained in the integrated test specification (IT) for the ADT-222B. The IT is used by Sperry for final acceptance testing of the ADT-222B. Consequently, successful attainment of the requirements of the IT constitutes verification that the ADT-222B is properly calibrated and operating in accordance with factory specifications. The IT is shown in table 4-4.

NOTICE

Procedures in table 4-4 are based on Sperry Integrated Test Specification, IT4047505-901, revision D(R).

1. SCOPE

This integrated test specification establishes the test requirements for the ADT-222B Air Data test system, Part No. 4047505-2XX, -4XX, in order to assure that the complete system is operating properly.

2. DELETED

3. GENERAL INFORMATION

The ADT-222B Air Data test system provides both pressure measurement and Pressure Control of the static pressure (P_S) and the total pressure (P_T). Pressure readouts and digital control input commands are presented in inches of mercury, millibars, or altitude and airspeed as selected by the operator. Precision digital rate control can be commanded by the operator in units of feet per minute, meters per minute, knots per minute, kilometers per hour per minute, millibars per minute, or milli-inches of mercury per second. The ADT-222B also provides control of Q_C transients during pressure rates in the P_S/Q_C and Altitude/Airspeed Modes. In addition, sinusoidal pressure waves can be generated by feeding an audio signal generator into the dynamic input connector on the back panel of the ADT-222B.

The following table shows dash numbers for the ADT-222B.

ADT-222B TOP ASSEMBLY

DRAWING STRUCTURE
INDEX DRAWING

Part Number		Description		
4047505-100		Basic		
4047505-200		Front Ports	Fixed Orifice Venting	
4047505-400		Rear Ports	Fixed Orifice Venting	
-ABC		Dash Number Code		
4047505	-211	No Options	Air	115V
	-212	No Options	Air	230V
Front Ports	-213	No Options	N2	115V
and	-214	No Options	N2	230V
Fixed Orifice	-221	ASCII Option	Air	115V
Venting	-222	ASCII Option	Air	230V
(Fouent)	-223	ASCII Option	N2	115V
	-224	ASCII Option	N2	230V
4047505	-411	No Options	Air	115V
	-412	No Options	Air	230V
Rear Ports	-413	No Options	N2	115V
and	-414	No Options	N2	230V
Fixed Orifice	-421	ASCII Option	Air	115V
Venting	-422	ASCII Option	Air	230V
	-423	ASCII Option	N2	115V
	-424	ASCII Option	N2	230V
A		Porting and Venting		
2XX		Front Ports and Fixed Orifice Venting		
4XX		Rear Ports and Fixed Orifice Venting		

ADT-22B TOP ASSEMBLY (cont)

DRAWING STRUCTURE
INDEX DRAWING

B	Option Description
1	No Options
2	ASCII Option

C	Calibration and Power
1	Air and 115 Volts
2	Air and 230 Volts
3	Nitrogen and 115 Volts
4	Nitrogen and 230 Volts

4. POWER AND SIGNAL REQUIREMENTS

4.1 Power Sources.

4.1.1 Part No. 4047505-2X1, -2X3, -4X1, -4X3: 115 volts rms ±10%, 45 to 440 Hz single phase power with safety ground, 1.5 amperes or greater.

4.1.2 Part No. 4047505-2X2, -2X4, -4X2, -4X4: 230 volts rms ±10%, 45 to 440 Hz single phase power with safety ground, 0.75 ampere or greater.

4.2 Signal Sources. Square wave signal generator with 1 volt peak-to-peak and 15 volts peak-to-peak at 0.1 Hz.

5. TEST EQUIPMENT

110 inches of mercury Schwein Manometer (or equivalent)*

Vacuum Pumps (one Sargent Welch No. 1373B 300 L/min) and (two 50 L/min Edwards Speedivac 2)

Signal Generator, Wavetek VCG Model III; or equivalent

Two 30 cubic inch volume tanks, SPN 4022677

Two 200 cubic inch volume tanks, SPN 4050313-2

Pressure Source; Dry Air for Part No. 4047505-2X1, -2X2, -4X1, -4X2, or Dry Nitrogen for Part No. 4047505-2X3, -2X4, -4X3, -4X4.

* In the event that a field service depot or an ADT-222 customer does not have access to a primary pressure standard such as a Schwien manometer, a pressure transfer standard such as an ADT-321 may be used to calibrate an ADT-222B throughout its control pressure range ($.5 \leq Ps \leq 32$ in. Hg Abs and $1.5 \leq Pt \leq 90$ in. Hg Abs). This procedure will not allow calibration throughout the full measure range of the ADT-222. ($.32 Ps \leq 40$ in. Hg Abs and $.5 \leq Pt \leq 100$ in. Hg Abs). If calibration through the full measure range is actually required, the ADT-222B must be sent to the nearest 100 in. Hg Schwien manometer location and calibrated normally. This field calibration procedure may not be used during initial manufacture at Sperry Flight Systems.

6. TEST SETUP

6.1 Initial Switch Settings.

Switch Description	Position
Ps SHUTOFF	Off (Down)
Pt SHUTOFF	Off (Down)
DYNAMIC INPUT LIGHTS	Off (Front Panel)

6.2.1 Unit Under Test (UUT) Connections (Figure 1). The UUT Line Cord shall be connected to the appropriate power source (see 4.1). The green wire shall be grounded before connecting unit to power source. Turn off the green power switch immediately if it comes on when unit is plugged in. See Test No. 1.

6.2.2 Vacuum Connection. All tests are performed using the dual 50 liter/min vacuum pumps except for the load test using a single 300 liter/min vacuum pump.

6.2.2.1 Dual Vacuum Pump Operation. Connect vacuum pumps (Edwards Speedivac 2 or equivalent, 50 liter/min) to Vt and Vs fittings provided at rear of UUT. Each fitting is to be connected to a separate pump. Use 3/8 I.D. minimum hose with a maximum length of 10 feet.

6.2.2.2 Single Vacuum Pump Operation. Connect single vacuum pump 300 liter/min free air displacement (Sargent Welch Model No. 1373, or equivalent) to a minimum 3/8 I.D. tee at the pump. Use two 3/8 I.D. minimum hose with a maximum length of 10 feet to connect the tee to Vt and Vs fittings provided at the rear of UUT.

6.2.3 Pressure Connection. Connect a pressure supply of clean dry air or dry N2 to the P_{in} fitting at the rear of the UUT. The pressure shall be pre-regulated to 50 lbs/in^2 ± 5 (Gage Pressure). See paragraph 5 for proper supply.

NOTE 1: Static and pitot pressure ports are located on the front (as shown) for Part No. 4047505-2XX. Static and pitot pressure ports for Part No. 4047505-4XX are located on the rear panel.

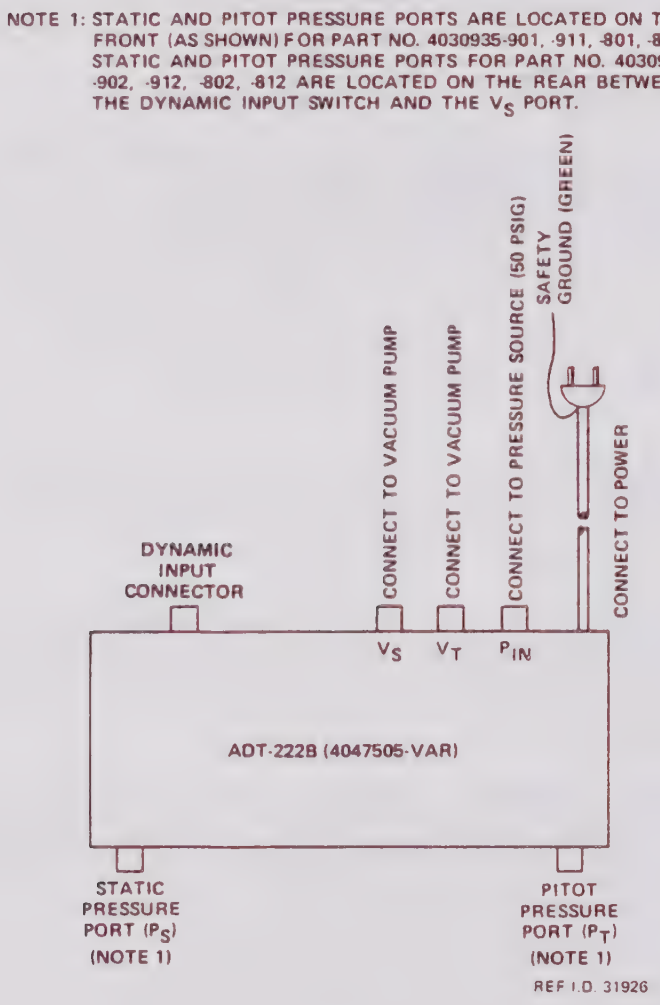

Figure 1
ADT-222B Test Connections

7. TEST REQUIREMENTS

Column	Description
Test No.	Tests are normally numbered in sequence. If any tests are added in future revisions, such as after Test 4, these added tests may be numbered 4.1, 4.2, 4.3.
Switch Pos	Perform switch settings in order specified. When an item is entered in Work Steps column opposite a switch setting other than the first, or when there is an additional space between switches, perform this work before setting any other switches.
Work Steps	When work step items are entered opposite first switch pos, perform all switch setting other than first setting or when there is an additional space between switches, perform work step item before setting any other switches.
Opr Limits	Units under test shall meet these limits prior to operational use. When an item is marked optional in this column, the corresponding test is not required except as an aid in troubleshooting.
Test Description	These items are the parameters to which the unit under test was designed. In addition, these items aid in troubleshooting by specifying the input and output signal terminals. For brevity all conditions required need not be repeated for each test. Conditions established in previous tests may also apply.

TEST NO.	SPECIFICATION			PROCEDURE		
	OPR LIMITS	C	TEST DESCRIPTION	SWITCH POS	C	WORK STEPS
1.00			SENSOR WARM-UP			SENSOR WARM-UP NOTE Power must be left off the UUT for at least 4 hours prior to this test.
			With power applied (per Section 6.2.1) to the UUT, both Static Pressure and Pitot Pressure displays shall indicate XX. CCC where XX are any numbers.	Power On		Start a timer when power is turned on. When lamps stop flashing (5 flashes) operate the P_S/P_T switch.
				P_S/P_T On		
	15 to 30 min.					Do not remove power for more than 30 seconds total during this test. Stop timer when all CCC disappear.

TEST NO.	SPECIFICATION			PROCEDURE		
	GO/NO GO LIMITS	&	TEST DESCRIPTION	SWITCH POS	C	WORK STEPS
2.00			SELF TEST When power is cycled (off to on), the UUT shall initialize in the self test mode. The response of the front panel lamps and displays shall be as described below.			SELF TEST
2.01	All lamps OK All decimal points OK		The total number of lamps is 15, plus 4 LED decimal points. The P_S and P_T pressures will vent toward ambient during self test.	DISABLE Q_C Limit Off DISABLE Subsonic Limit Off Power - Off Power - On		Cycle power quickly so time duration in Test 1 will not be affected. All lamps shall come on. Some may flash, some may not, but all lamps shall turn on.
2.02	All displays OK					When the lamps stop flashing, each display digit shall cycle, exhibiting the following characters: 0, 1, 2, 3, 4, 5, 6, 7, 8, 9, A, (Blank), C, -d, E, F, (Decimal Point) Decimal point shall shift through all six positions of each display.

TEST NO.	SPECIFICATION			PROCEDURE		
	OPR LIMITS	C	TEST DESCRIPTION	SWITCH POS	C	WORK STEPS
3.00			LEAK TEST (MEASURE) With the UUT connected as shown in Figure 1 and the Ps and Pt ports capped (Ps and Pt Shutoff valves open), the leak rate shall be as specified. The test shall be conducted at 31 ± 1 in. Hg on Ps side and at 89 ± 1 in. Hg on the Pt side. The measurement shall be taken with the UUT in the Measure/Ps-Pt mode after allowing 5 to 6 minutes for the system to stabilize. The readings will be taken 1 minute apart. NOTE Use the Ps and Pt caps hanging on the chains on the panel.	Measure - On P_S/P_T - On P_S/P_T MANUAL Valves - Open Control - - On Disable Q_C Limit - On Disable Subsonic Limits - On Measure - On		LEAK TEST Cap Ps and Pt fittings using attached caps. Set digit switches to Ps = 031.000 in. Hg Pt = 089.000 in. Hg Ps Rate H = 40,000 ft/minute Pt Rate P_T = 500 milli-in. Hg/sec Operate Enter. Wait until the displays reach the commanded pressures. Wait at least 5 minutes before taking readings. Take readings from Ps and Pt displays one minute apart.
3.01	-.020 to +.020 in. Hg/minute (Ps)					
3.02	-.020 to +.020 in. Hg/minute (Pt)					

TEST NO.	SPECIFICATION			PROCEDURE		
	OPR LIMITS	C	TEST DESCRIPTION	SWITCH POS	C	WORK STEPS
			The test shall be conducted as described above (3.01 and 3.02), except the pressures on both Ps and Pt sides shall be 1.75 ± .25 in. Hg. The leak rate shall be as specified. The measurement shall be taken with the UUT in the measure Ps/PT mode after allowing at least 5 minutes for the air temperature to stabilize. The readings will be taken 1 minute apart.	Control - On		Set digit switches to Ps = 1.75 in. Hg Pt = 1.75 in. Hg Operate ENTER. Wait until the displays reach the commanded pressure. Wait at least 5 minutes before taking readings. Take readings from Ps and Pt displays 1 minute apart.
3.03	-.005 to +.005 in. Hg/minute (Ps)			Measure - On		
3.04	-.005 to +.005 in. Hg/minute (Pt)					

TEST NO.	SPECIFICATION			PROCEDURE		
	OPR LIMITS	C	TEST DESCRIPTION	SWITCH POS	C	WORK STEPS
4.00			LEAK TEST (CONTROL) With the Ps and Pt ports connected to a vacuum source (.5 to 1.0 in. Hg) and the rear ports capped, the leak rate as determined from the Static Pressure and Pitot Pressure displays shall be as specified when the Ps and Pt shut off valves are closed. The system shall be allowed to stabilize from 5 to 6 minutes prior to taking measurement. The measurement shall be taken for a total duration of 1 minute with the UUT in the Control/Ps-Pt mode with expanded display and "A5" showing. If the unit returns to MEASURE after capping off the pressure and vacuum ports, reconnect pressure and vacuum and start over.	Control - ON PS/PT - Manual Valves - Closed P_S/P_T Manual Valves - Open		Set digit switches to Ps = 32.000 in. Hg, Ps rate = 40,000 Pt = 32.000 in. Hg, Pt rate = 500. Remove caps from ports. Wait for solenoids to operate approximately 15 seconds after operating panel control button. Operate ENTER. NOTE An E will appear in both displays. Cap off the V_S, V_T and P_{in} rear panel ports. Connect vacuum pump to the P_S and P_T fittings. As soon as the P_S or P_T display falls between .5 and 1.0 in. Hg, shut the corresponding manual valve.
4.01						Set P_S and P_T command switches to a pressure above the displayed pressure and operate ENTER. "A5" will appear in the two right most digits of each display.

TEST NO.	SPECIFICATION			PROCEDURE		
	OPR LIMITS	C	TEST DESCRIPTION	SWITCH POS	C	NORM ITEMS
	-.020 to +.020 in. Hg/min (P_S/P_T)					Press ATE and simultaneously, momentarily press MEASURE to expand the display by one digit while in control. Wait at least 5 minutes before taking readings. Take readings from P_S and P_T displays 1 minute apart. The tens of milli-in. Hg digit may change by 1 in a minute. Return to Front Panel Control by pressing CONTROL and momentarily pressing MEASURE.
4.02	-.020 to +.020 in Hg/min (P_S/P_T)		The "A5" should be removed from the display and replaced by "E," and then "A5" will appear again as the control valve contacts the other nozzle.			Set P_S and P_T command switches to a pressure below the display. Repeat the steps in 4.01.

TEST NO.	SPECIFICATION			PROCEDURE		
	OPR LIMITS	C	TEST DESCRIPTION	SWITCH POS	C	WORK STEPS
5.00			STATIC PRESSURE ACCURACY The static pressure accuracy when the UUT is in the Measure/Ps-Pt mode shall be as specified. The input pressures listed in Table I shall be established at the Ps port for each reading. The system must pass the leak test prior to taking any data.	Power - ON P_S/P_T - On Measure - On P_S/P_T Manual Valves - Open		STATIC PRESSURE ACCURACY The power must be on for 8 hours and uninterrupted for at least 1 hour (and in the P_S/P_T Measure Mode with the UUT vented to Atmosphere) prior to data taking. CAUTION This document assumes the operator is familiar with the correct operation of his precision manometer (Schwien or equivalent).
5.01 thru 5.16	Per Table I -.010 to +.010 in. Hg/minute					Put Schwien on proper gas. Connect Schwien to the Ps fitting and level UUT and set center line of UUT to center line of Schwien within ±1 inch. Using Schwien, leak test system at 1.0 in. Hg. If the UUT is held near 1.0 in. Hg for more than 10 minutes you must recycle .5 to 40 in. Hg. once. If the UUT is held near 1.00 in. Hg for more than 20 minutes you must vent the UUT to

TEST NO	SPECIFICATION			PROCEDURE		
	DPR LIMITS	C	TEST DESCRIPTION	SWITCH POS	C	WORK STEPS
						atmosphere and leave unit with power on in Measure Mode for 8 hours. Using Schwien, cycle the pressure three times from .5 to 40. in. Hg. The pressure rate during the cycle must not exceed 50 in. Hg/minute. Take the data (Ps display) starting at .320 in. Hg in ascending pressure to 40.000 in. Hg. Plot this data on a graph. Fill in the data blocks on the plot.

TEST NO.	SPECIFICATION			PROCEDURE		
	OPR LIMITS	C	TEST DESCRIPTION	SWITCH POS	C	WORK STEPS
						Put the Plot in the ITA Packet. NOTES: 1) If the Run does not pass the accuracy specification, bring the pressure back to atmospheric, leave power on for at least 24 hours, and then repeat the pressure cycling and accuracy run called out in Test 5.00 and 6.00. Do not recalibrate. If the unit fails the accuracy test, repeat this 24-hour cycle for a maximum of six days. On the sixth day, recalibrate the unit. Take the Run over again, using the same sequence described above. 2) The UUT covers must not be off the unit for more than 1 minute out of any 10-minute period during any part of this accuracy test.

TEST NO	SPECIFICATION			PROCEDURE		
	OPR LIMITS	C	TEST DESCRIPTION	SWITCH POS	E	WORK STEPS
						3) CAUTION: In the Measure Mode, the UUT will valve off from outside world and bleed down the internal pressure to near atmospheric whenever the Ps or Pt presure sensors are overpressured. (Ps $\geq$ 40.300 or Pt $\geq$ 100.300). If this happens when the unit is connected to the Schwien, close the Ps/Pt shutoff valves. Put the UUT back in the Ps/Pt in. Hg measure mode and read the display. This will stop the venting. Dial the Schwien to equal the proper (Ps/Pt) displayed pressure and then open the Ps/Pt shutoff valves. Be sure the Schwien is in Low accuracy when you open the shutoff valves. You may now proceed with your tests. If the UUT is overpressured when it is in the control mode, it will not valve off from the outside world and will vent the complete pneumatic system to atmosphere.

TABLE I

STATIC PRESSURE ACCURACY

Test No.	Input Pressure (In. Hg)	Static (minimum)	Pressure Display (Maximum)	Reading (Nominal)
5.01	.320	.317	.323	.320
5.02	1.000	.997	1.003	1.000
5.03	3.000	2.997	3.003	3.000
5.04	5.000	4.997	5.003	5.000
5.05	8.000	7.997	8.003	8.000
5.06	11.000	10.997	11.003	11.000
5.07	14.000	13.997	14.003	14.000
5.08	17.000	16.997	17.003	17.000
5.09	20.000	19.997	20.003	20.000
5.10	23.000	22.997	23.003	23.000
5.11	26.000	25.997	26.003	26.000
5.12	29.000	28.997	29.003	29.000
5.13	32.000	31.997	32.003	32.000
5.14	35.000	34.997	35.003	35.000
5.15	38.000	37.997	38.003	38.000
5.16	40.000	39.997	40.003	40.000

TABLE II

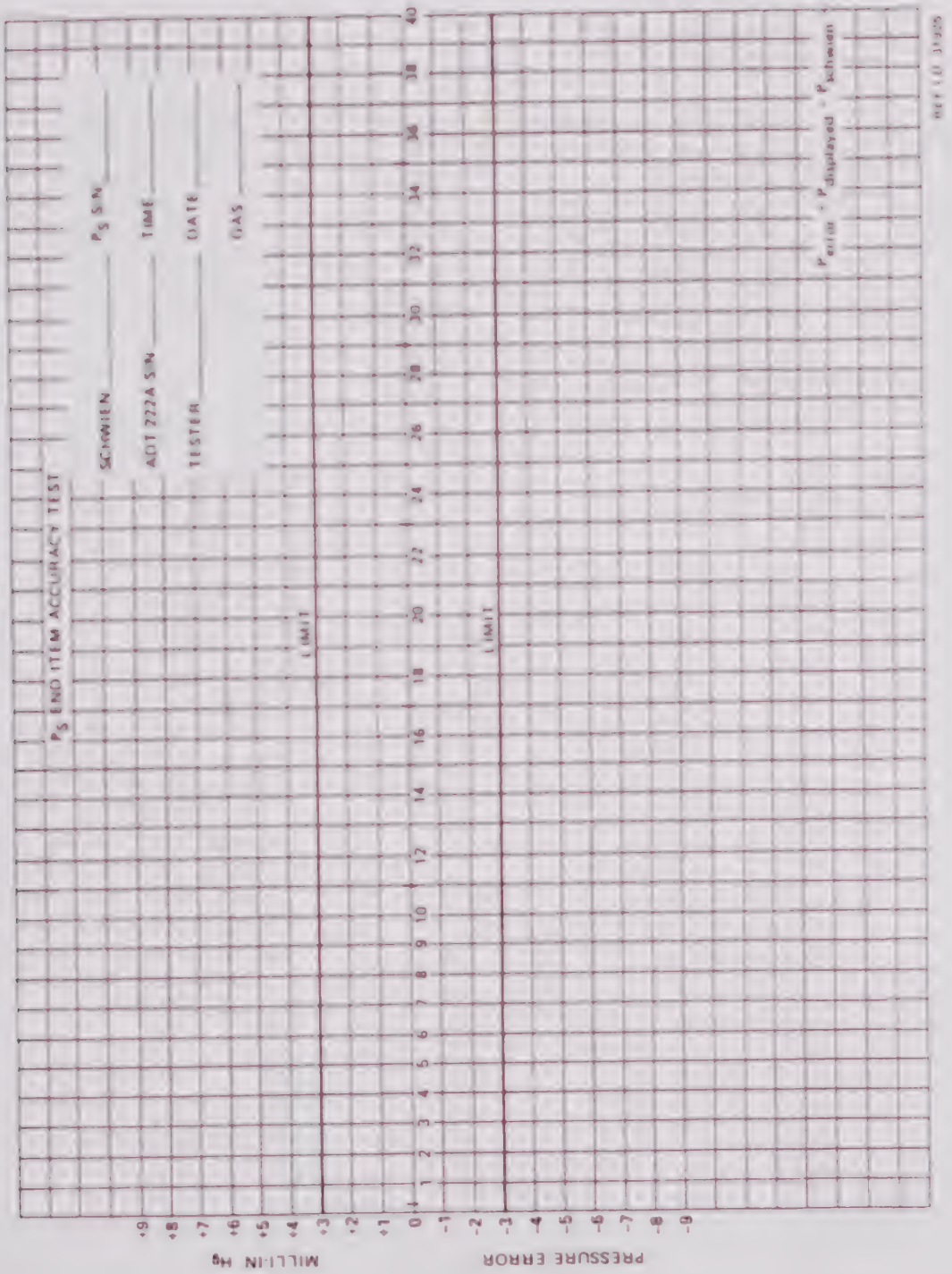
P_S END ITEM ACCURACY TEST
SCHWEIN
P_S S/N
ADT 222A S/N
TIME
TESTER
DATE
GAS
LIMIT
LIMIT
$P_{error} = P_{displayed} - P_{schwein}$
MILLI-IN Hg
PRESSURE ERROR

TEST NO.	SPECIFICATION			PROCEDURE		
	OPR LIMITS	C	TEST DESCRIPTION	SWITCH POS	C	WORK STEPS
6.00			PITOT PRESSURE ACCURACY The pitot pressure accuracy when the UUT is in the Measure/Ps-Pt mode shall be as specified. The input pressures listed in Table III shall be established at the Pt port for each reading.	Power - On P_S/P_T - On Measure - On P_S/P_T Manual Valves - Open		PITOT PRESSURE ACCURACY The power must be on for 8 hours and (uninterrupted for at least 1 hour and in the P_S/P_T Measure Mode with the UUT vented to atmosphere) prior to data taking.
6.00 thru 6.20						Put Schwien on proper gas. Connect Schwien to the P_T fitting, and level UUT and set center line of UUT to center line of Schwien within ±1 inch. Using Schwien, leak test system at 1.0 in. Hg. If the UUT is held near 1.0 in. Hg for more than 10 minutes, you must recycle from .5 to 100 in. Hg once. If the UUT is held near 1.0 in. Hg for more than 20 minutes, you must vent the UUT to Atmosphere and leave unit with power on in the measure mode for 8 hours.

TEST NO	SPECIFICATION			PROCEDURE		
	OPR LIMITS	D	TEST DESCRIPTION	SWITCH POS	C	WORK STEPS
						Using Schwien cycle the pressure three times from .5 to 100.000 in. Hg. Take the data (P_T display) starting at .500 in. Hg in ascending pressure to 100.00 in. Hg. Plot this data on a graph. Fill in the data blocks on the plot. Put the plot in the ITA packet. See notes 1 thru 3 under test 5.

TABLE III

PITOT PRESSURE ACCURACY

Test No.	Input Pressure (In. Hg)	Pitot Pressure Display (Minimum)	Pitot Pressure Display (Maximum)	Reading (Nominal)
6.01	.500	.497	.503	.500
6.02	1.000	.997	1.003	1.000
6.03	3.000	2.997	3.003	3.000
6.04	5.000	4.997	5.003	5.000
6.05	8.000	7.997	8.003	8.000
6.06	11.000	10.997	11.003	11.000
6.07	14.000	13.997	14.003	14.000
6.08	17.000	16.997	17.003	17.000
6.09	20.000	19.997	20.003	20.000
6.10	24.000	23.997	24.003	24.000
6.11	28.000	27.997	28.003	28.000
6.12	32.000	31.996	32.004	32.000
6.13	37.000	36.996	37.004	37.000
6.14	42.000	41.996	42.004	42.000
6.15	50.000	49.996	50.004	50.000
6.16	60.000	49.996	60.004	60.000
6.17	70.000	69.994	70.006	70.000
6.18	80.000	79.994	80.006	80.000
6.19	90.000	89.994	90.006	90.000
6.20	100.000	99.990	100.010	100.000

TABLE IV

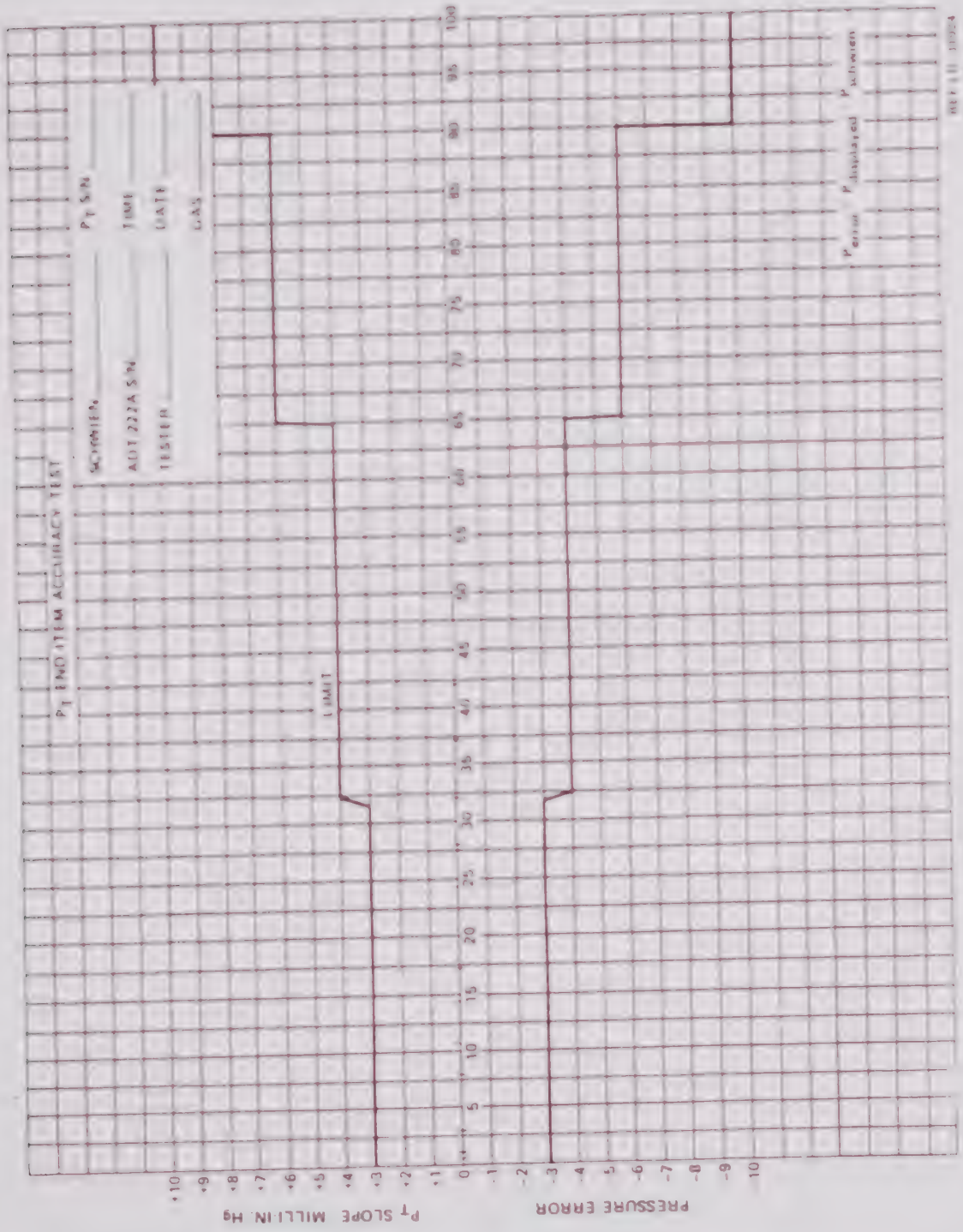

Integrated Test Specification
Table 4-4 (cont)

TEST NO.	SPECIFICATION			PROCEDURE		
	OPR LIMITS	C	TEST DESCRIPTION	SWITCH POS	C	WORK STEPS
7.00			CONTROL OPERATION The UUT shall be connected as described in Paragraph 6.2.1 with the Ps and Pt Shutoff valves closed. The Static Pressure displays shall read as specified when the input commands listed in Table V are entered in the control/Ps-Pt (In. Hg) mode. Modes shall be switched as indicated in Table V to make the corresponding readings.	Power - On P_S/P_T - On P_S/P_T Manual Valves - Closed Control - On SSL/QCL Lights On		CONTROL OPERATION Connect UUT as indicated in Paragraph 6.2.1. Verify that all readings are within specification. Do not record.
7.01 thru 7.35	Per Table V		For each test in Section 7.00, set the Altitude rate command to 90,000 ft/min, and set the P_T rate command to 900 knots/min or 900 milli in. Hg/min.			

TABLE V

CONTROL OPERATION

Ps/Pt ON, METRIC OFF
STATIC PRESSURE INPUT COMMAND 000.500
PITOT PRESSURE INPUT COMMAND 001.500
OPERATE ENTER

Test No.	Parameter	Mode	Minimum	Maximum
7.01	Ps	Ps-Pt (In. Hg)	0.499	0.501
7.02	Pt	Ps-Pt (In. Hg)	1.499	1.501
7.03	Ps(mb)	Ps-Pt(mb)	16.8	17.0
7.04	Pt(mb)	Ps-Pt(mb)	50.7	50.9
7.05	Qc	Ps-Qc (In. Hg)	0.999	1.001
7.06	ALT	ALT(Ft)-A/S(Kts)	90448	90468
7.07	A/S	ALT(ft)-A/S(Kts)	143.6	143.8
7.08	ALT	ALT(M)-A/S(KM/H)	27568	27574
7.09	A/S	ALT(M)-A/S(KM/H)	265.9	266.3
7.10	Qc	PS(mb)-Qc(mb)	33.700	34.100
7.11	MACH	ALT(M)-MACH	1.383	1.389
7.12	MACH	ALT(Ft)-MACH	1.383	1.389

TABLE V (cont)

Each of the following tests are performed with:

P_S/P_T ON, METRIC OFF

STATIC PRESSURE INPUT COMMAND = 030.000

Command the Pitot Pressure listed below and keep P_S Pressure constant. Operate ENTER after each input.

Test No.	Pitot Command Pressure	Minimum	Maximum
7.13	16.666	16.665	16.667
7.14	22.222	22.221	22.223
7.15	33.333	33.332	33.334
7.16	44.444	44.443	44.445
7.17	55.555	55.553	55.557
7.18	69.999	69.997	70.001
7.19	77.777	77.775	77.779
7.20	88.888	88.886	88.890

PS-QC ON, METRIC OFF
STATIC INPUT COMMAND 9.999
QC COMMAND -01.111

Test No.	Parameter	Minimum	Maximum
7.21	PS	9.998	10.000
7.22	Qc	-01.112	-01.110

TABLE V (cont)

Each of the following tests are performed with:

ALTITUDE/A-S ON, METRIC OFF

AIRSPEED INPUT COMMAND = 100

Command the Altitude listed below and keep airspeed constant. Operate ENTER after each input.

Test No.	Altitude Command	Minimum	Maximum
7.23	-00005	-00006	-00004
7.24	11,111	11,110	11,112
7.25	22,222	22,221	22,223
7.26	33,333	33,332	33,334
7.27	44,444	44,443	44,445
7.28	55,550	55,545	55,555
7.29	66,666	66,676	66,686
7.30	77,777	77,787	77,767
7.31	88,888	88,878	88,898
7.32	90,000	89,990	90,010

CONTROL OPERATION

P_S/P_T ON, METRIC OFF
STATIC PRESSURE INPUT COMMAND 032000
PITOT PRESSURE INPUT COMMAND 090000
OPERATE ENTER

Test No.	Parameter	Mode	Minimum	Maximum
7.34	Ps	Ps-Pt (In. Hg)	31.999	32.001
7.35	Pt	Ps-Pt (In. Hg)	89.998	90.002

TEST NO.	SPECIFICATION			PROCEDURE		
	OPR LIMITS	C	TEST DESCRIPTION	SWITCH POS	C	WORK STEPS
8.00			MEASURE MODE TRANSIENT			MEASURE MODE TRANSIENT
			Control to Measure: The pressure transient at the Ps and Pt ports shall be as specified when the operation mode is changed from control to Measure.	Metric - OFF P_S/P_T - ON Measure - On P_S/P_T Manual Valves - Open P_T Manual Valve - Closed Control - ON		Connect a mercury manometer or equivalent to the Ps fitting. Set digit switches to Ps = .500 P_T = 30.000 in. Hg. Operate ENTER.
8.01	-.020 to +.020 in. Hg		Measure to Control: The pressure transient at the Ps and Pt ports shall be as specified when the operation mode is changed from Measure to Control.	Measure - ON		Wait until display and manometer settle out. Read maximum transient presure on manometer.
8.02	-.020 to +.020 in. Hg			Control - ON		Read maximum pressure transient on manometer. Set digit switches to Ps = 15.000. Operate ENTER. Wait until display and manometer settle out.

TEST NO	SPECIFICATION			PROCEDURE		
	OPR LIMITS		TEST DESCRIPTION	SWITCH POS		WORK STEPS
8.03	-.020 to +.020 in. Hg			Measure - ON		Read maximum transient pressure on manometer.
8.04	-.020 to +.020 in. Hg			Control - ON		Read maximum transient pressure on manometer.
						Set digit switches to Ps = 32.000.
						Operate ENTER.
						Wait until display and manometer settle out.
8.05	-.020 to +.020 in. Hg			Measure - ON		Read maximum transient pressure on manometer.
8.06	-.020 to +.020 in. Hg			Control - ON		Read maximum transient pressure on manometer.
			Control to Measure:	P_S/P_T - ON		Connect a mercury manometer or equivalent to the P_T fitting.
			The pressure transient at the Ps and Pt ports shall be as specified when the operation mode is changed from Control to Measure.	P_S/P_T manual Valves - Open		
				P_S Manual Valve - Closed		Set digit switches to Ps = 30.000 Pt = 1.500 in. Hg.
				Control - ON		
						Operate ENTER.
						Wait until display and manometer settle out.

TEST NO.	SPECIFICATION			PROCEDURE		
	OPR LIMITS	C	TEST DESCRIPTION	SWITCH POS	C	WORK STEPS
8.07	-.020 to +.020 in. Hg		Measure to Control:	Measure - ON		Read maximum transient pressure on manometer.
8.08	-.020 to +.020 in. Hg		The pressure transient at the Ps and Pt ports shall be as specified when the operation mode is changed from Measure to Control.	Control - ON		Read maximum pressure transient on manometer.
						Set digit switches to P_T = 45.000.
						Operate ENTER.
						Wait until display and manometer settle out.
8.09	-.020 to +.020 in. Hg			Measure - ON		Read maximum transient pressure on manometer.
8.10	-.020 to +.020 in. Hg			Control - ON		Read maximum transient pressure on manometer.
						Set digit switches to P_T = 90.000.
						Operate ENTER.
						Wait until display and manometer settle out.
8.11	-.020 to +.020 in. Hg			Measure - ON		Read maximum transient pressure on manometer.

Integrated Test Specification
Table 4-4 (cont)

TEST NO.	SPECIFICATION			PROCEDURE		
	DPR LIMITS	C	TEST DESCRIPTION	SWITCH POS	C	WORK STEPS
8.12	-.020 to +.020 in. Hg			Control - ON		Read maximum transient pressure on manometer. Set digit switches to P_T = 30.000 Operate ENTER. Wait until display and manometer settle out. Remove manometer.
				P_S/P_T Manual Valves - Closed		

TEST NO.	SPECIFICATION			PROCEDURE		
	OPR LIMITS	C	TEST DESCRIPTION	SWITCH POS	C	WORK STEPS
9.00			CONTROL OVERSHOOT Static Control: The pressure as read on the Static Pressure display shall not overshoot more than specified when a 1 in. Hg change is commanded. The test shall be conducted in both directions.	Ps/Pt Manual Valves - Closed Ps/Pt - ON Control - ON		CONTROL OVERSHOOT Set digit switches to Ps = .500 Pt = 30.000. Ps rate = 40,000 and Pt rate = 500 Operate ENTER. Wait until displays settle out to commanded pressures. Set digit switches to Ps = 2.500. Operate ENTER and immediately set digit switches to Ps = .500. When Ps display exceeds 1.5 in. Hg, operate ENTER. Watch Ps display as pressure comes into .500 in. Hg.
9.01	0 to .002 in. Hg					Overshoot must not exceed Set digit switches to Ps = 15.000. Operate enter. Wait until displays settle out to commanded pressures.

TEST NO	SPECIFICATION			PROCEDURE		
	OPR LIMITS	D	TEST DESCRIPTION	SWITCH POS	C	WORK STEPS
						Set digit switches to Ps = 17.000. Operate ENTER and immediately set digit switches to Ps = 15.000. When Ps display exceeds 16.000 in. Hg, operate ENTER. Watch Ps display as pressure comes into 15.000 in. Hg.
9.02	0 to .002 in. Hg					Overshoot must not exceed Set digit switches to Ps = 13.000. Operate ENTER and immediately set digit switches to Ps = 15.000. When Ps display goes below 14.000, operate ENTER.
9.03	0 to .002 in. Hg					Overshoot must not exceed Set digit switches to Ps = 32.000. Operate ENTER. Wait until displays settle out to commanded pressures

TEST NO.	SPECIFICATION			PROCEDURE		
	OPR LIMITS	C	TEST DESCRIPTION	SWITCH POS	C	WORK STEPS
9.04	0 to .002 in. Hg		Pitot Control: The pressure as read on the Pitot Pressure display shall not overshoot more than specified when a 1 in. Hg change is commanded. The test shall be conducted in both directions.	PS/PT Manual Valves - Closed PS/PT - ON Control - ON		Set digit switches to Ps = 30.000, operate ENTER, and immediately set digit switches to Ps = 32.000. When Ps display goes below 31.000 in. Hg operate ENTER. Watch Ps display as pressure comes into 32.000 in. Hg. Overshoot must not exceed Set digit switches to Ps = 30.000 Pt = 3.500. Operate ENTER. Wait until displays settle out to commanded pressures. Set digit switches to Pt = 5.500. Operate ENTER and immediately set digit switches to Pt = 3.500.

TEST NO.	SPECIFICATION			PROCEDURE		
	OPR LIMITS	C	TEST DESCRIPTION	SWITCH POS	C	WORK STEPS
						When display exceeds 4.5 in. Hg, operate ENTER. Watch Pt display as pressure comes into 3.500 in. Hg.
9.05	0 to .002 in. Hg					Overshoot must not exceed Set digit switches to Pt = 45.000. Operate ENTER. Wait until displays settle out to commanded pressures. Set digit switches to Pt = 47.000 in. Hg. Operate ENTER and immediately set digit switches to Pt = 45.000 in. Hg. When Pt display exceeds 46.000 in. Hg operate ENTER. Watch Pt display as pressure comes into 45.000 in. Hg.

TEST NO.	SPECIFICATION			PROCEDURE		
	OPR LIMITS	C	TEST DESCRIPTION	SWITCH POS	C	WORK STEPS
9.06	0 to .002 in. Hg					Overshoot must not exceed Set digit switches to Pt = 43.000. Operate ENTER and immediately set digit switches to Pt = 45.000. When Pt display goes below 44.000, operate ENTER. Watch Pt display as Pt pressure comes into 45.000 in. Hg.
9.07	0 to .002 in. Hg					Overshoot must not exceed Set digit switches to Pt = 90.000. Operate ENTER. Wait until displays settle out to commanded pressures. Set digit switches to Pt = 88.000. Operate ENTER and immediately set digit switches to Pt = 90.000. When Pt display goes below 89.000 in. Hg operate ENTER. Watch Pt display as pressure comes into 90.000 in. Hg.
9.08	0 to .002 in. Hg					Overshoot must not exceed

Integrated Test Specification
Table 4-4 (cont)

TEST NO	SPECIFICATION			PROCEDURE		
	OPR LIMITS	C	TEST DESCRIPTION	SWITCH POS	C	WORK STEPS
10.00			PRECISION ALTITUDE RATE Ascending: The time for the [ALT] display to change from 10,000 to 70,000 feet shall be as specified. The test shall be started at sea level (0 feet) and the final altitude shall be 90,000 feet with the precision ALTITUDE - RATE COMMAND set at 20,000 feet/min.	P_S/P_T Manual Valves - Closed Control - ON Altitude/ Airspeed - ON Both Precision Rates ON.		PRECISION ALTITUDE RATE Set digit switches to ALT = 0000 feet A/S = 600.0 knots Rates H = 20,000 ft/min Vc = 250 knots/min Operate ENTER. Wait until displays reach commanded values. Set digit switches to Alt = 90,000 feet. Operate ENTER. When Altitude passes 10,000 ft, start timer. When Altitude passes 70,000 ft, stop timer.

TEST NO.	SPECIFICATION			PROCEDURE		
	OPR LIMITS	C	TEST DESCRIPTION	SWITCH POS	C	WORK STEPS
10 .01	178.2 to 181.8 seconds (180.0 nom)					Elapsed time must be
			<u>Descending</u>:			Set digit switches to Alt = 0000. feet.
			The above test shall be repeated for descending altitudes (70,000 to 10,000 feet).			Operate ENTER.
						When Altitude passes 70,000 ft, start timer.
						When Altitude passes 10,000 ft, stop timer.
10 .02	178.2 to 181.8 seconds (180.0 nom)					Elapsed time must be

Integrated Test Specification
Table 4-4 (cont)

TEST NO	SPECIFICATION			PROCEDURE		
	OPR LIMITS	C	TEST DESCRIPTION	SWITCH POS	E	WORK STEPS
11 .00			PRECISION AIRSPEED RATE Increasing: The time for the (A/S) display to change from 100 to 850 knots shall be as specified. The test shall be started at 50 knots and the final airspeed shall be 900 knots with the precision AIRSPEED - RATE COMMAND set at 250 knots/min.	P_S/P_T Manual Valves - Closed Control - ON Altitude/ Airspeed - ON Both Precision Rates - ON		PRECISION AIRSPEED RATE Set digit switches to Alt = 30,000 ft. A/S = 50.0 knots Operate ENTER. Wait until displays reach commanded values. Set digit switches to A/S = 900.0 knots. Operate ENTER. When A/S passes 100 knots, start timer. Stop timer when A/S passes 850 knots.

TEST NO.	SPECIFICATION			PROCEDURE		
	OPR LIMITS	C	TEST DESCRIPTION	SWITCH POS	C	WORK STEPS
11 .01	178.2 to 181.8 sec (180.0 nom)					Elapsed time must be
			<u>Decreasing</u>:			Set digit switches to A/S = 50.0 knots.
			The above test shall be repeated for decreasing airspeeds (850 to 100 knots).			Operate ENTER. When A/S passes 850 knots, start timer. When A/S passes 100 knots, stop timer.
11 .02	178.2 to 181.8 sec (180.0 nom)			Both Precision Rates - OFF		Elapsed time must be

TEST NO.	SPECIFICATION			PROCEDURE		
	GPR LIMITS		TEST DESCRIPTION	SWITCH POS		WORK ITEM
12 .00			DYNAMIC INPUT			DYNAMIC INPUT
			Drift Rate: The UUT shall be stabilized in the Control/Ps-Pt mode with no dynamic input (front panel Dynamic Input lights off) and the Static Pressure and Pitot Pressure displays controlled to the proper pressure. When the Dynamic Input switch on the front panel is turned on, the drift rate of the displayed pressures shall be as specified. The measurements shall be taken 1 minute apart.	P_S/P_T - ON Control _ ON		Turn off dynamic input switch on front panel (lights off). Set digit switches to Ps = .5 Pt = 1.5. Rates H = 40,000 ft/min P_T = 500. mil/in. Hg/ sec Operate ENTER. Wait until displays reach commanded pressures.
				P_S Dynamic Light-ON		Wait until the P_S Dynamic Light stops flashing. Measure Ps display drift for 1 minute.
12 .01	-.005 to +.005 in. Hg (Ps)					The maximum drift must be

TEST NO.	SPECIFICATION			PROCEDURE		
	OPR LIMITS	C	TEST DESCRIPTION	SWITCH POS	C	WORK STEPS
12 .02				P_S Dynamic -OFF P_T Dynamic - ON		Measure P_T display drift for one minute.
	-.005 to +.005 in Hg (P_t)					The maximum drift must be
				Dynamic Light - OFF		Set digit switches to Ps = 15.000 and Pt = 45.000 in. Hg. Operate ENTER. Wait until displays reach commanded pressures.
				P_S Dynamic Light - ON		Wait until P_S Dynamic Light stops flashing. Measure Ps display drift for one minute.
12 .03	-.005 to +.005 in. Hg (Ps)			P_S Dynamic Light - OFF P_T Dynamic Light - ON		The maximum drift must be
12 .04						Measure P_T display drift for one minute.
	-.005 to +.005 in. Hg (P_t)					The maximum drift must be
				Dynamic Lights - OFF		Set digit switches to Ps = 32.000 and Pt = 90.000 in Hg. Operate ENTER.

Integrated Test Specification
Table 4-4 (cont)

TEST NO	SPECIFICATION			PROCEDURE		
	CPR LIMITS	C	TEST DESCRIPTION	SWITCH POS	C	WORK ITEMS
						Wait until displays reach commanded pressures.
				PS Dynamic Light - ON		Wait until P_S light stops flashing.
						Measure Ps display drift for 1 minute.
12 .05	-.005 to +.005 in. Hg (Ps)					The maximum drift must be
12 .06				P_T Dynamic Light - ON		Measure P_T display drift for 1 minute.
	-.005 to +.005 in. Hg (Pt)			PS Dynamic Light - OFF		The maximum drift must be
				Dynamic Lights - OFF		FEED-THROUGH:
				P_S/P_T - ON Control - ON		Connect signal generator to dynamic input connector on back panel.
						Set digit switches to Ps = 30.000, Pt = 30.000 in. Hg. Operate ENTER.
						Wait until displays reach command pressures.

TEST NO.	SPECIFICATION			PROCEDURE		
	OPR LIMITS	C	TEST DESCRIPTION	SWITCH POS	C	WORK STEPS
						With a 15 ± 1 volt P-P, square wave .1 Hz signal applied across pins A (Hi) and B (Lo) of connector A20J2 and the P_S/P_T Dynamic Lights OFF, the respective Static Pressure or Pitot Pressure display shall indicate the specified modulation.
12 .07	0 to .002 in. Hg Peak to Peak (Ps)					The modulation on the Ps display shall be
12 .08	0 to .002 in. Hg Peak to Peak (Pt)					The modulation on the Pt display shall be
						MODULATION:
				P_S/P_T - ON Control - ON P_S/P_T Dynamic Lights - OFF		Set digit switches to Ps = 30.000 and Pt = 30.000 in. Hg. Operate ENTER.
						Wait until displays reach commanded pressures.
				P_S Dynamic Light - ON		Wait until the P_S Dynamic Light stops flashing.

Integrated Test Specification
Table 4-4 (cont)

TEST NO	SPECIFICATION			PROCEDURE		
	OPR LIMITS	D	TEST DESCRIPTION	SWITCH POS	D	WORK STEPS
						With 1 ± .1 volt P-P, square wave .1 Hz signal applied across pins A (Hi) and B (Lo) of connector A20J2 and the P_S or P_T Dynamic Input Light ON, the respective Static pressure or Pitot Pressure display shall indicate the specified modulation. The test shall be conducted at 30 ± 1 in. Hg in the Panel/Ps-Pt mode.
12 .09	.075 to .150 in. Hg Peak to Peak (Ps)					The Ps display modulation shall be
				P_S Dynamic Light - OFF		
				P_T Dynamic Light - ON		Wait until P_T Dynamic Light stops flashing.
12 .10	.075 to .150 in. Hg Peak to Peak (Pt)					The Pt display modulation shall be
				Dynamic Lights - OFF		
						Remove signal generator from dynamic input connector on back panel.

TEST NO.	SPECIFICATION			PROCEDURE		
	OPR LIMITS	C	TEST DESCRIPTION	SWITCH POS	C	WORK STEPS
13.00			Q_C CONTROL Increasing Ps: When the static pressure is changed from 1.5 to 32.0 in. Hg at a rate equivalent to 20,000 feet/min. the (Q_C) display shall read as specified. The UUT shall be in the Control/Ps-Qc (In. Hg) mode and the (Qc) display controlled to 0 at start of test.	P_S/Q_C - ON Control - ON		Q_C CONTROL Set digit switches to Ps = 1.500 and Qc = .000 In. Hg. Operate ENTER. Wait until displays reach commanded pressures. Set digit switches to Ps = 32.000 Qc = .000. Rates $\dot{H}$ = 20,000 ft/min P_T = 500. milli-in. Hg/sec Operate ENTER.

TEST NO	SPECIFICATION			PROCEDURE		
	OPR LIMITS	C	TEST DESCRIPTION	SWITCH POS	C	WORK STEPS
13 .01	-.025 to +.025 in. Hg (Qc)					Watch for the maximum transient on the Qc display. The maximum transient on the Qc display during the entire Ps pressure run to 32.000 in. Hg shall be
			Decreasing Ps: When the same test described above is performed except static pressure is changed from 32.0 to 1.5 in. Hg, the (Qc) display shall read as specified.			Set digit switches to Ps = 1.500 Qc = .000 in. Hg. Operate ENTER. Watch for the maximum transient on the Qc display.
13 .02	-.025 to +.025 in. Hg (Qc)					The maximum transient on the Qc display during the entire Ps pressure run to 1.5 in. Hg shall be

TEST NO.	SPECIFICATION			PROCEDURE		
	OPR LIMITS	C	TEST DESCRIPTION	SWITCH POS	C	WORK STEPS
14.00						Load Test (200 in^3)
				Altitude/ Airspeed - ON Measure - ON P_S/P_T Manual Valves - Open		Slowly vent the UUT P_S and P_T pressure to ambient.
						Connect a 200 cubic inch volume tank, SPN 4050313-2, to the PS pneumatic fitting. Use 6 ± .5 ft 3/16 ID hose between the fitting and the volume tank.
				P_T Manual Valve - Closed Control - ON		Set digit switches to ALT = -1800 ft. Altitude Rate $\dot{H}$ = 40,000 ft/min A/S = 600 knots Airspeed Rate $\dot{V}_C$ = 500 knots/min Operate ENTER.

TEST NO	SPECIFICATION			PROCEDURE		
	OPR LIMITS	Δ	TEST DESCRIPTION	SWITCH POS	Δ	WORK STEPS
14 .01	30 sec					Wait until displays reach Commanded values. Set Altitude = 90,000 feet. Operate ENTER. Watch Altitude display during entire rate to 90,000 feet. An "E" or "AS" shall not appear in the Altitude display for a total duration of more than 30 seconds. Set ALT = -1800. feet Operate ENTER. Watch Altitude display during entire rate to -1800. feet. An "E" or "AS" shall not appear in the Altitude display for a total duration of more than 30 seconds.
14 .02	30 sec			Altitude/ Airspeed - ON Measure - ON Ps/Pt Manual Valves - Open		Remove volume tank from Ps fitting. Slowly vent the UUT Ps and Pt pressure to ambient.

TEST NO.	SPECIFICATION			PROCEDURE		
	OPR LIMITS	C	TEST DESCRIPTION	SWITCH POS	C	WORK STEPS
						Connect the 200 cubic inch tank to the Pt fitting.
				P_S Manual Valve - Closed Control - ON		
						Set digit switches to Altitude = 16,000. feet Airspeed = 50 knots
						Operate ENTER.
						Wait until display reaches commanded values.
						Set Airspeed to 1000.0 knots. Operate ENTER.
14.03	30 sec					Watch Airspeed display during entire rate to 1000. knots. An "E" or "AS" shall not appear in the Airspeed display for a total duration of more than 30 seconds.
						Set Airspeed to 50 knots.
						Operate ENTER.

Integrated Test Specification
Table 4-4 (cont)

TEST NO.	SPECIFICATION			PROCEDURE		
	GPA LIMITS	C	TEST DESCRIPTION	SWITCH POS	C	WORK STEPS
14 .04	≤ 30 sec					Watch Airspeed display during entire rate to 50 knots. An "E" or "AS" shall not appear in the Airspeed display for a total duration of more than 30 seconds. Set digit switches to Altitude = 67,000 feet Airspeed = 50 knots Operate ENTER. Wait until displays reach commanded values. Set Airspeed to 1000. knots. Operate ENTER.
14 .05	≤ 30 sec					Watch Airspeed display during entire rate to 1000. knots. An "E" or "AS" shall not appear in the Airspeed display for a total duration of more than 30 seconds. Set Airspeed to 50 knots. Operate ENTER.
14 .06	≤ 30 sec					Watch Airspeed display during entire rate to 50 knots. An "E" or "AS" shall not appear in the airspeed display for a total duration of more than 30 seconds.

TEST NO.	SPECIFICATION			PROCEDURE		
	OPR LIMITS	C	TEST DESCRIPTION	SWITCH POS	C	WORK STEPS
15 .00						Single Vacuum Pump Load Test (60 in^3)
				Altitude/ Airspeed - ON Measure - ON P_S/P_T Manual Valves - Open		Slowly vent the UUT P_S and P_T pressure to ambient. Shut off vacuum pumps and connect a single 300 liter/min pump as described in Test Setup Section. Connect two 30-cubic inch volume tanks, SPN 4022677, to the P_S pneumatic fitting. Use 24 ± 1 inch 3/16 ID hose between the fitting and the volume tank and a 12 ± 1 inch 3/16 ID hose between the two volume tanks.
				P_T Manual Valve - Closed Control - ON		Set digit switches to ALT = -1800 ft Altitude Rate $\dot{H}$ = 40,000 ft/min A/S = 600 knots Airspeed Rate $\dot{V}_C$ = 500 knots/min Operate ENTER.

Integrated Test Specification
Table 4-4 (cont)

TEST NO	SPECIFICATION			PROCEDURE		
	OPR LIMITS	C	TEST DESCRIPTION	SWITCH POS	I	WORK STEPS
15 .01	30 sec					Wait until displays reach Commanded values. Set Altitude = 90,000 feet. Operate ENTER. Watch Altitude display during entire rate to 90,000 feet. An "E" or "AS" shall not appear in the Altitude display for a total duration of more than 30 seconds. Set ALT = -1800. feet Operate ENTER. Watch Altitude display during entire rate to -1800. feet. An "E" shall not appear in the Altitude display for a total duration of more than 30 seconds.
15 .02	30 sec			Altitude/ Airspeed - ON Measure - ON P_S/P_T Manual Valves - Open		Remove volume tanks from P_S fitting. Slowly vent the UUT Ps and Pt pressure to ambient. Connect the two volume tanks to the Pt fitting.

TEST NO.	SPECIFICATION			PROCEDURE		
	OPR LIMITS	C	TEST DESCRIPTION	SWITCH POS	C	WORK STEPS
				P_S Manual Valve - Closed Control - ON		Set digit switches to Altitude = 16,000. feet Airspeed = 50 knots Operate ENTER. Wait until display reaches commanded values. Set Airspeed to 1000.0 knots. Operate ENTER.
15.03	$\leq$ 15 sec					Watch Airspeed display during entire rate to 1000. knots. An "E" or "AS" shall not appear in the Airspeed display for a total duration of more than 15 seconds. Set Airspeed to 50 knots Operate ENTER.
15.04	$\leq$ 15 sec					Watch Airspeed display during entire rate to 50 knots. An "E" or "AS" shall not appear in the Airspeed display for a total duration of more than 15 seconds.

TEST NO	SPECIFICATION			PROCEDURE		
	OPR LIMITS	C	TEST DESCRIPTION	SWITCH POS	C	WORK STEPS
						Set digit switches to Altitude = 67,000 feet Airspeed = 50 knots Operate ENTER. Wait until displays reach commanded values. Set Airspeed to 1000 knots. Operate ENTER.
15 .05	≤ 15 sec					Watch Airspeed display during entire rate to 1000 knots. An "E" or "AS" shall not appear in the Airspeed display for a total duration of more than 15 seconds. Set Airspeed to 50 knots. Operate ENTER.
15 .06	≤ 15 sec					Watch Airspeed display during entire rate to 50 knots. An "E" or "AS" shall not appear in the airspeed display for a total duration of more than 15 seconds. Shut off vacuum pump and reconnect dual vacuum 50 liter/min pumps as described in Test Setup Section.

TEST NO.	SPECIFICATION			PROCEDURE		
	OPR LIMITS	C	TEST DESCRIPTION	SWITCH POS	C	WORK STEPS
16 .00			QCL AND SSL LIMITS			QCL AND SSL LIMITS
			With the Disable Qc Limit and Disable Subsonic Limit switches off, the UUT shall not accept the following commands:	Metric - OFF P_S/P_T - ON Control - ON SSL/QCL Lights OFF		Set digit switches to Ps = 30.000 Pt = 30.000 in. Hg Operate ENTER.
16 .01	SSL and QCL Lamp flashing and pressure must not move		1. Qc greater than 15 in. Hg (QCL and SSL lamp shall flash) 2. Ps less than 3.2 in. Hg (SSL lamp shall flash) 3. Pt greater than 45 in. Hg (SSL lamp shall flash)			Set digit switches to Ps = 10.000 Pt = 30.000 in. Hg. Operate ENTER.
16 .02	SSL and QCL light stop flashing		When each of the above conditions are commanded the appropriate lamp shall flash and when an acceptable condition is commanded the lamp shall stop flashing.			Set digit switches to Ps = 30.000 Pt = 30.000 in Hg Operate ENTER.
16 .03	SSL Lamp and QCL Lamps flashing					Set digit switches to Ps = 3.000 Pt = 30.000 in. Hg Operate ENTER.

TEST NO	SPECIFICATION			PROCEDURE		
	OPR LIMITS	C	TEST DESCRIPTION	SWITCH POS	C	WORK STEPS
16 .04	SSL and QCL light stop flashing		$\overline{QCL}$ = Disable Q_C Limit $\overline{SSL}$ = Disable Subsonic Limits The pressure shall not move during these invalid commands.			Set digit switches to Ps = 30.000 Pt = 30.000 in. Hg Operate ENTER.
16 .05	QCL and SSL light flash					Set digit switches to Ps = 30.000 Pt = 50.000 in. Hg Operate ENTER.
16 .06	SSL and QCL lights stop flashing					Set digit switches to Ps = 30.000 Pt = 30.000 in. Hg Operate ENTER.
16 .07	QCL light flashes					Set digit switches to Ps = 30.000 Pt = 27.000 Operate ENTER.
16 .08	QCL light stops flashing					Set digit switches to Ps = 30.000 Pt = 29.000 Operate enter.

TEST NO.	SPECIFICATION			PROCEDURE		
	OPR LIMITS	C	TEST DESCRIPTION	SWITCH POS	C	WORK STEPS
17.00			Fixed Orifice Venting Test	P_S/P_T Manual Control Valves - Closed Control - ON		Set digit switches to P_S = 10.000 in of Hg.
						P_T = 15.000 in of Hg.
						Operate ENTER.
						Connect pin 35 of the round ATE connector on the Rear Panel to ground.
			The ADT-222B will come up in a venting mode. Monitor the P_S and P_T displays and verify that P_S does not become greater than P_T by 2 inches of Hg. UUT should vent to atmosphere on both sides. P_S pressure should not move to P_T pressure in less than 10 seconds.	Power - OFF Power - ON		
						Remove connection between pin 35 of round ATE connector on Rear Panel and ground.

TEST NO	SPECIFICATION			PROCEDURE		
	OPR LIMITS	F	TEST DESCRIPTION	SWITCH POS	D	WORK STEPS
18 .00						Overpressure Test
				Metric - OFF Ps/Pt - ON Measure - ON DSSL - ON DQCL - ON Ps/Pt Manual valves - open		
18 .01						Connect a regulated pressure source to the Ps pneumatic fitting and slowly increase the pressure until the pressure equals 41. in Hg ± 0.5 in. Hg. The UUT shall valve off, go to self test, and bleed the pressure down to ambient. Close the P_S Manual valve. Wait at least 3 minutes, then go to P_S/P_T measure mode and verify that the pressure has vented to atmosphere.
				P_S Manual valve - closed Ps/Pt - ON Metric - OFF		Disconnect the pressure source.

Integrated Test Specification
Table 4-4 (cont)

TEST NO.	SPECIFICATION			PROCEDURE		
	OPR LIMITS	C	TEST DESCRIPTION	SWITCH POS	C	WORK STEPS
						Connect a regulated pressure source to the Pt front panel preumatic fitting and slowly increase the pressure until the pressure equals 101. in. Hg. ± .75 in. Hg. The UUT shall valve off, go to self test, and bleed the pressure down to ambient.
						Close the PT Manual valve. Wait at least 3 minutes, then go to PS/PT measure mode and verify that the pressure had vented to atmosphere.
				PT Manual valve - Closed		Disconnect the pressure source.
						End of Test
				POWER OFF		
						THANK YOU.

Section 3. Theory of Operation

1. General

A simplified block diagram of the ADT-222B is shown in figure 4-1. The ADT-222B consists of a pneumatic system, a system control section, a display panel, and a power supply. As an option, an ATE interface card is included. Operation of the ATE interface is explained in Chapter 3.

The pneumatic system consists of the P_S and P_t sensors; the P_S and P_t pressure control valves CV1 and CV2; two pressure regulators, R1 and R2; solenoid valves SV1 thru SV9; and the P_S and P_t manual shutoff valves, M1 and M2.

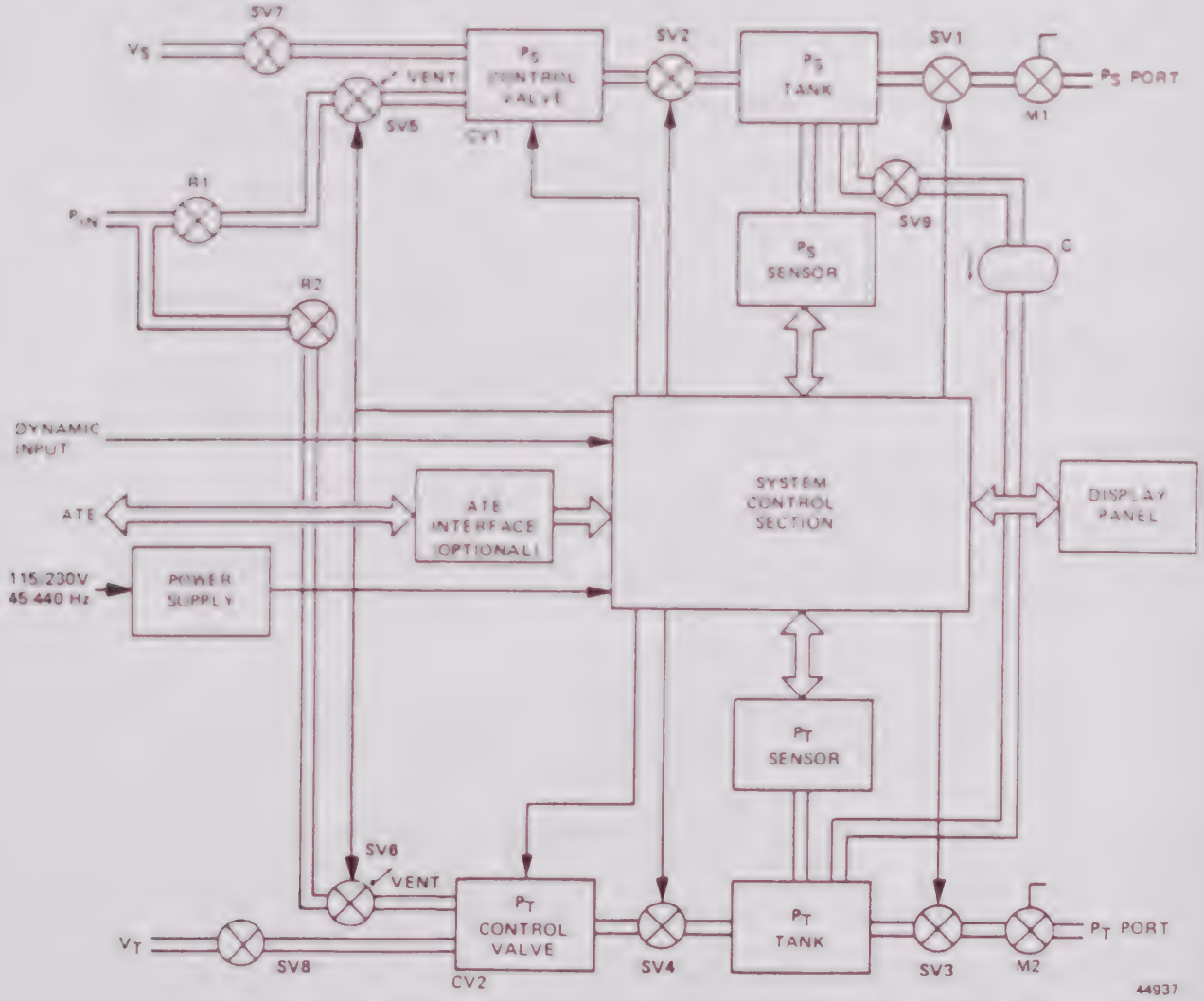

ADT-222B Simplified Block Diagram
Figure 4-1

Operation of the pneumatic system is controlled by the system control section. The control section contains all of the system electronics with the exception of the display panel, power supply, and the optional ATE interface. It interrogates the display panel for operator commands or (if applicable) the ATE interface for commands from an ATE, and controls the operating modes of the ADT-222B by operating the solenoid valves.

In the measure mode, the control section calculates absolute pressures by matching the raw output signals from the sensors to the sensor characteristics stored in the calibration memories. It then converts the absolute pressures to the measurement units selected by the operator and transmits them to the display panel for display.

In the control mode, the control section periodically interrogates the display panel for the operator's commands, performs the calculation and conversion of the sensor measurements, compares the measured values to the commanded values, and operates the control valves to cause the pressures to reach the commanded values at the commanded rates and within the commanded UUT protection limits.

When the operator is an ATE, the processor talks to the ATE interface instead of the display panel. In this mode, although the processor does not respond to display panel commands (except the command to go to, or return from, ATE control), it still transmits display information to the display panel.

An important function of the system control processor is the operation of the built-in-test (BIT) capability. BIT monitors the functional status of the ADT-222B, detects any failures, and causes the system to: (a) indicate the failure on the displays, and (b) protect the UUT from any possibility of damage by isolating the UUT from the internal pneumatic system of the ADT-222B. BIT also causes the ADT-222B to ignore any commands that would exceed the UUT protection limits. When this happens, the appropriate limit switch on the front panel flashes.

A. Two forms of BIT employed by the ADT-222B are self test and continuous monitoring. Self test is initiated whenever the input power is cycled or whenever the UUT protection limits are reached. Self test operates as follows:

(1) Self test is initiated whenever:

(a) the pressure exceeds the UUT protection limits,

(b) the ADT-222B is turned on, or

(c) power to the ADT-222B is temporarily interrupted.

(2) SV7 and SV8 close and SV1, SV2, SV3, SV4, SV5, SV6, and SV9 open and vent the UUT and the ADT-222B to atmosphere.

(3) The lighted pushbuttons and decimal points on the front panel cycle five times.

1. A. (4) When the pushbuttons stop flashing, the displays flash (all digits in unison) through the following sequence: 0,1,2,3,4,5,6,7, 8,9,A,(blank),C,-d,E,F. Also, the decimal point in each display cycles through each of the six decimal positions from left to right.

(5) During the flashing sequences, the processor performs a check sum of the memories and checks the status of the system test points to determine if a software or hardware failure has occurred.

(6) The displays continue to cycle until the operator selects a specific display mode by pressing one of the four vertical pushbuttons.

(7) When the operator selects a specific display mode, the ADT-222B enters the measure mode, exits the auto exhaust, and the displays stop flashing and indicate the measured pressure.

B. The light and display flash enable the operator to determine that all of the pushbutton lights and the display readouts are in operating order. The continuous monitoring form of BIT performs the following functions:

(1) It monitors the output from the power supply to detect power loss or power supply failure.

(2) It interprets each input command and determines if the command is within the UUT protection limits selected by the operator.

(3) It causes the system to ignore any commands which are immediately outside the constraints of the protection limits.

(4) It causes the DISABLE Q_C LIMIT switch or the DISABLE SUBSONIC LIMIT switch to flash whenever a command is entered that would cause a response exceeding the protection limits.

(5) It monitors the system's response to detect if and when the pressures reach the protection limits.

(6) If the pressures reach the protection limits, BIT immediately causes the system to enter self test, thereby stopping all pressure changes.

(7) If a hardware failure is detected, both displays indicate "FFF" in the three least significant digits, all solenoid valves close, and the ADT-222B ignores any further commands (except power off). The unit then goes to self test and vent.

(8) BIT also displays other error messages on the displays. An explanation of the BIT messages is contained in section 4 of this chapter.

2. Functional Operation

A. Pressure Control Valve

Controlled pressures within the ADT-222B are a result of the operation of control valves, CV1 and CV2. A cross-section of the control valve is shown in figure 4-2. The valve differs from the one used in the ADT-222 and ADT-222A by having two flappers (one for each nozzle) instead of one, but still has a single driving coil. This new control valve permits single vacuum pump operation, reduces gas consumption, and increases load driving capability. The flapper armature assembly (figure 4-3) is supported by four springs, two torsion bars, and two bending beams (K_B). The coil current magnetizes the armature and this creates a magnetic force between the armature and the permanent magnets, thus twisting the two torsion bars. Larger currents increase the deflection until one of the flapper beams begins to bend. The position of the flappers is determined by the coil current. With zero coil current, the armature is centered and the flapper-nozzle gaps G_1 and G_2 are very small, but not zero. The inlet pressure P_1 is supplied to nozzle 1, and P_3 is connected to the vacuum pump at nozzle 2. The controlled pressure P_2 surrounds the two flappers and is connected to the external load volume. There is a small region of current drive for which the size of gap G_1 can be increased and G_2 decreased (or vice versa) without any flapper nozzle

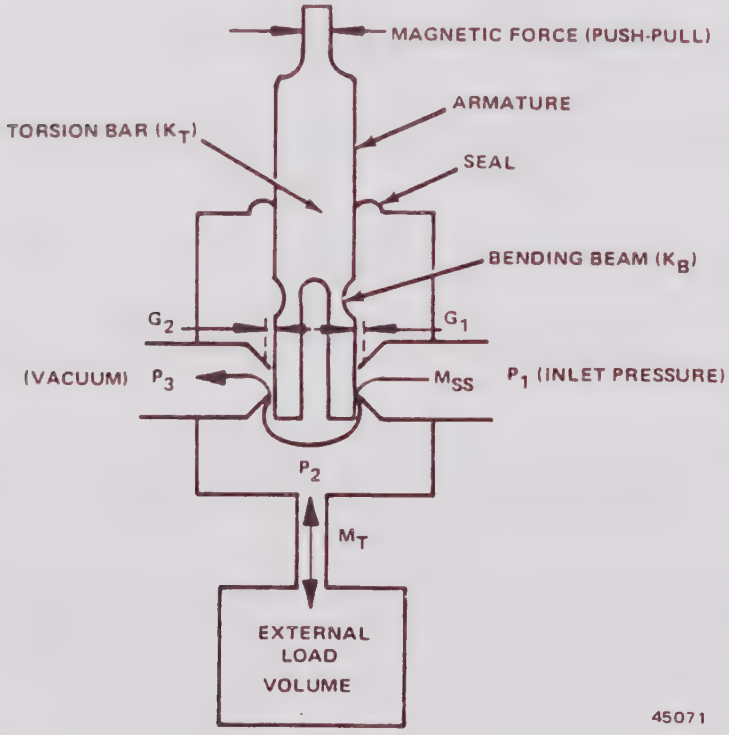

ADT-222B Pressure Control Valve Schematic
Figure 4-2

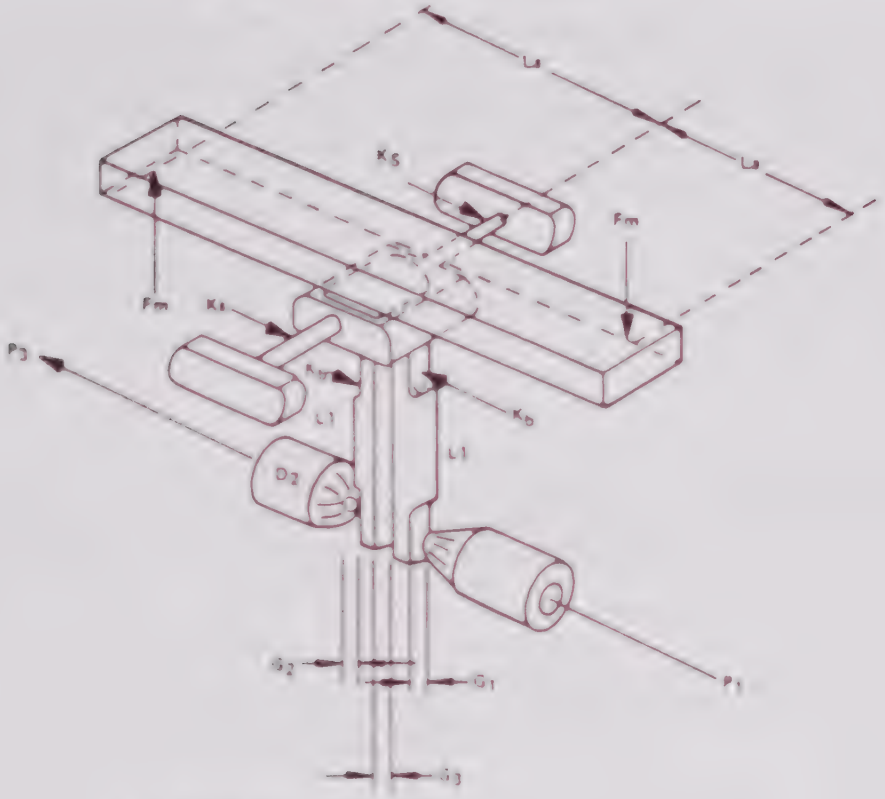

G_1 = GAP AT NOZZLE 1 (INCHES)

G_2 = GAP AT NOZZLE 2 (INCHES)

G_3 = GAP BETWEEN FLAPPERS (INCHES)

F_m = FORCE MOTOR FORCE (ASSUME TO BE APPLIED AT DISTANCE l_a – THE ARMATURE LENGTH) (1bf) (THERE ARE TWO F_m FORCES, ONE APPLIED AT EACH END OF THE TEE SHAPED ARMATURE)

L_a = ARMATURE LENGTH (INCHES) (CENTER OF AIR GAP TO PIVOT POINT)

L_1 = FLAPPERS LENGTH (INCHES) (CENTER OF NOZZLE TO PIVOT POINT)

K_a = TORSIONAL SPRING CONSTANT OF EACH SUSPENSION SPRING SEGMENT $\frac{in \cdot lbf}{RAD}$

K_b = BENDING SPRING CONSTANT OF EACH SUSPENSION SPRING SEGMENT $\frac{lbf}{in}$ (AT NOZZLE CENTER)

44938

Pressure Control Valve Suspension System
Figure 4-3

contact. This is the steady-state (pressure maintenance) region. For steady, controlled pressures, P_2, M_T (the transient load mass flow) is zero, but a small steady-state mass flow (M_{SS}) is flowing from the pressure source P_1 through the inlet gap G_1 around the two flappers and out gap G_2 to vacuum pump P_3. This small wasted mass flow is necessary for high resolution pressure control. For larger coil drive currents, flapper nozzle contact occurs. For example, G_2 is reduced to zero, which completely shuts off the vacuum pump mass flow, and then opens G_1

proportionally with increasing current. This makes the valve 100 percent efficient, because the load driving capability is dependent only on the nozzle flow area and the vacuum and pressure sources. Even though one nozzle is completely shut off, precision pressure rates can be achieved because the flow area of the open nozzle can be precisely controlled. The valve design is such that the flapper position follows the drive current extremely fast. This condition is necessary to achieve smooth and accurate pressure transitions. The contacting surfaces of the nozzles and flappers are precision-ground from heat-treated metal. The three pneumatic valve connections (P_1, P_2, P_3) are protected with fine particle screens.

2. B. Pressure Sensor

Pressure measurements in the ADT-222B are made by a vibrating diaphragm pressure sensor shown in figure 4-4. The sensor contains a flat resonant diaphragm connected to a permanent magnet and driving coil assembly. The driving coil is connected to an amplifier to form an oscillator circuit in a configuration similar to a quartz crystal oscillator (the high-Q resonant diaphragm assembly taking the place of the crystal). Since the resonant frequency of the diaphragm is a function of the absolute pressure loading, this configuration results in a nonlinear but direct pressure to frequency transducer. The output frequency of the sensor is, therefore, a direct, monotonic function of the pressure applied to the input tube.

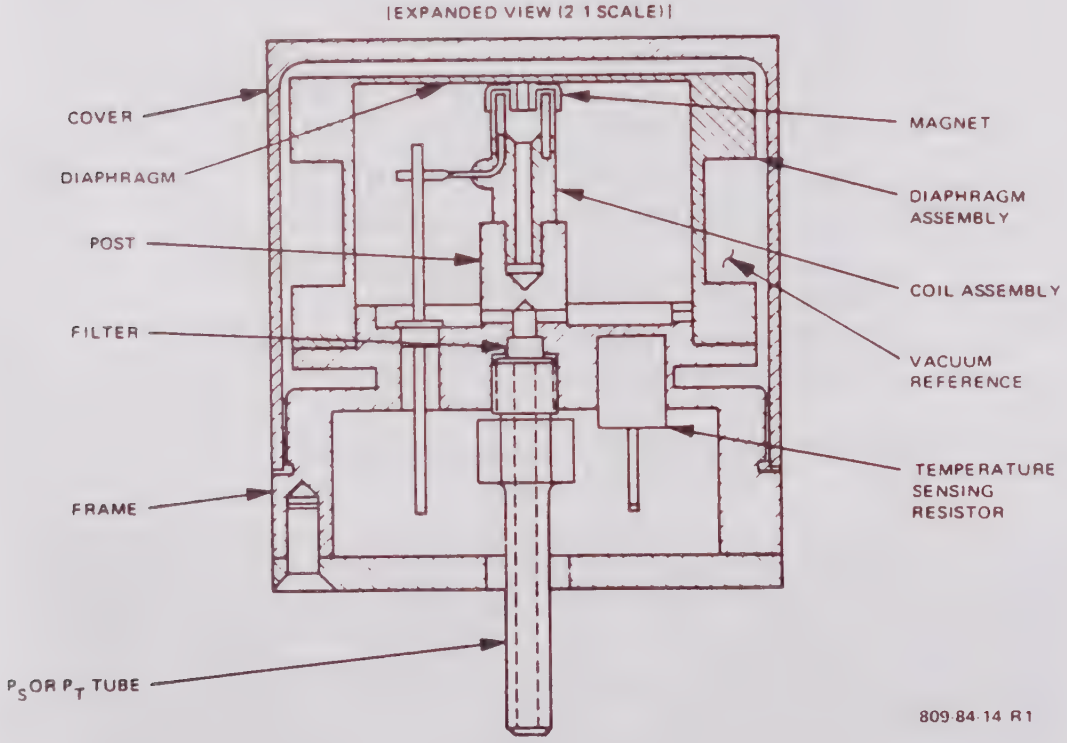

Vibrating Diaphragm Pressure Sensor
Figure 4-4

The control valves and the sensors are operated by the system control section to provide controlled pressures to the UUT. Since the four measure modes (Altitude/Airspeed, P_s/Q_c, P_s/P_t, and Altitude/Mach) consist of the same measurement processes that are used in the three control modes (Altitude/Airspeed, P_s/Q_c, and P_s/P_t), the following paragraphs explain the operation of the system control section in the control mode only.

Functionally, the system control section consists of an analog inner loop control system and a digital outer loop control system for each pressure channel. In the ALTITUDE/AIRSPEED and P_s/Q_c control modes, the system control section coordinates the operation of the two control systems (P_s and P_t) to obtain the required pressure response.

All internal operations of the ADT-2228 are performed in terms of inches of mercury for P_s and P_t. The digital processor contained in the system control section performs all of the calculations and conversions necessary to receive commands and display measurements in the other available display units.

2. C. Analog Inner Loop Control System

The inner loop control system (figure 4-5) consists of an inner loop, central loop, and auto IC tracking loop.

The inner loop consists of a valve drive, pressure control valve, vibrating diaphragm pressure sensor, frequency to dc voltage converter, a lag-lead network, sum amplifier, and two multipliers cascaded for inner loop electronic gain control. The output of the pressure control valve is P_2. P_2 is P_s in the P_s channel and P_t in the P_t channel. The control valve responds to its input current, I, derived from V_1, V_2, and V_3, by controlling the output pressure, P_2. P_2 is measured by the sensor whose output frequency, F_p, is a function of P_2. This sensor signal is fed into the frequency to dc (F/V) converter which converts the signal to a dc voltage proportional to F_p. The dc output of the F/V converter, V_3, is subtracted from the command voltage, V_1, in a summing network to produce an error signal. The error voltage, V_2, is converted to control valve input current by a variable gain control network.

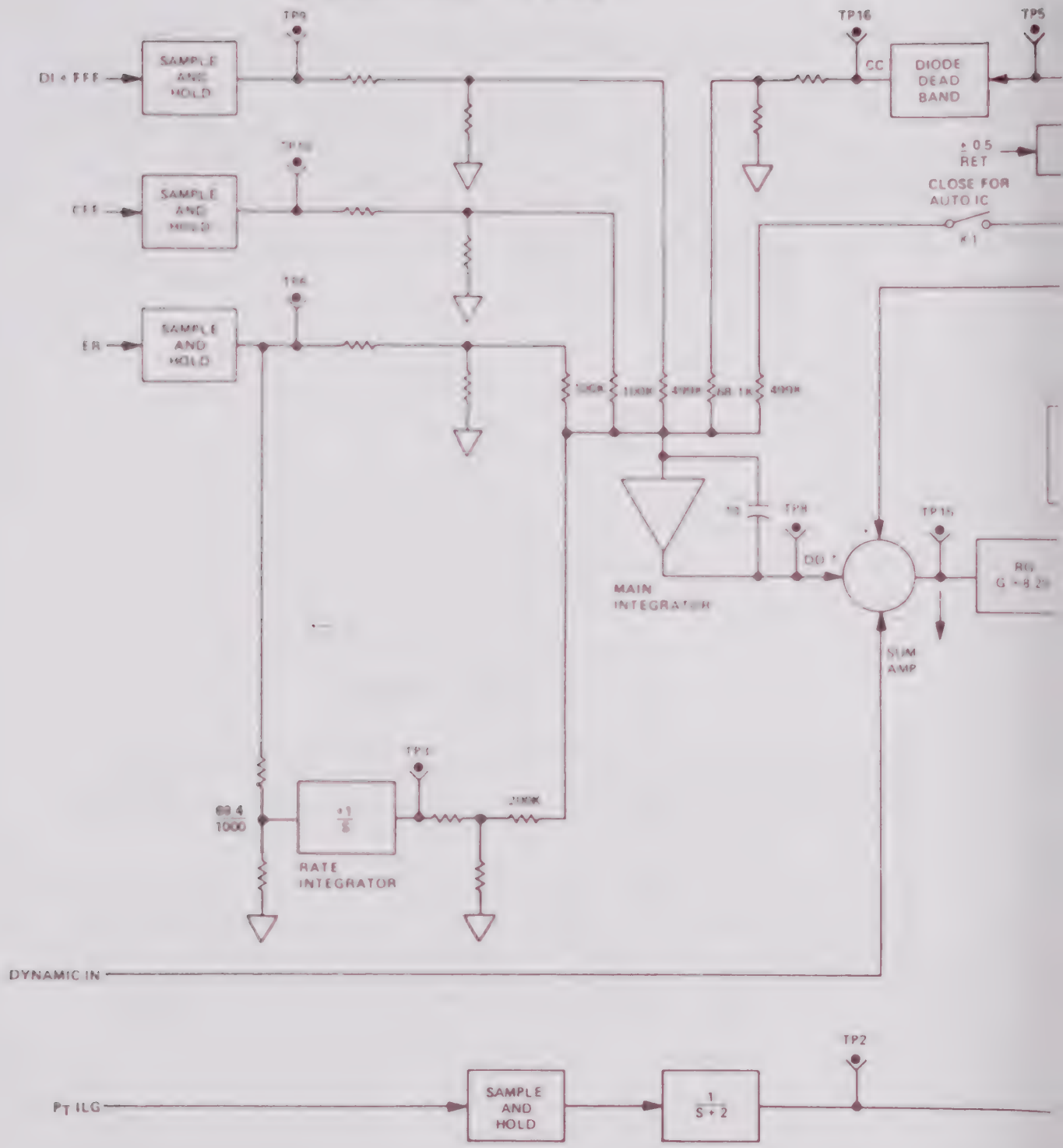

P_s/P_t Inner Loop Card A12/A13 Block Diagram
Figure 4-5

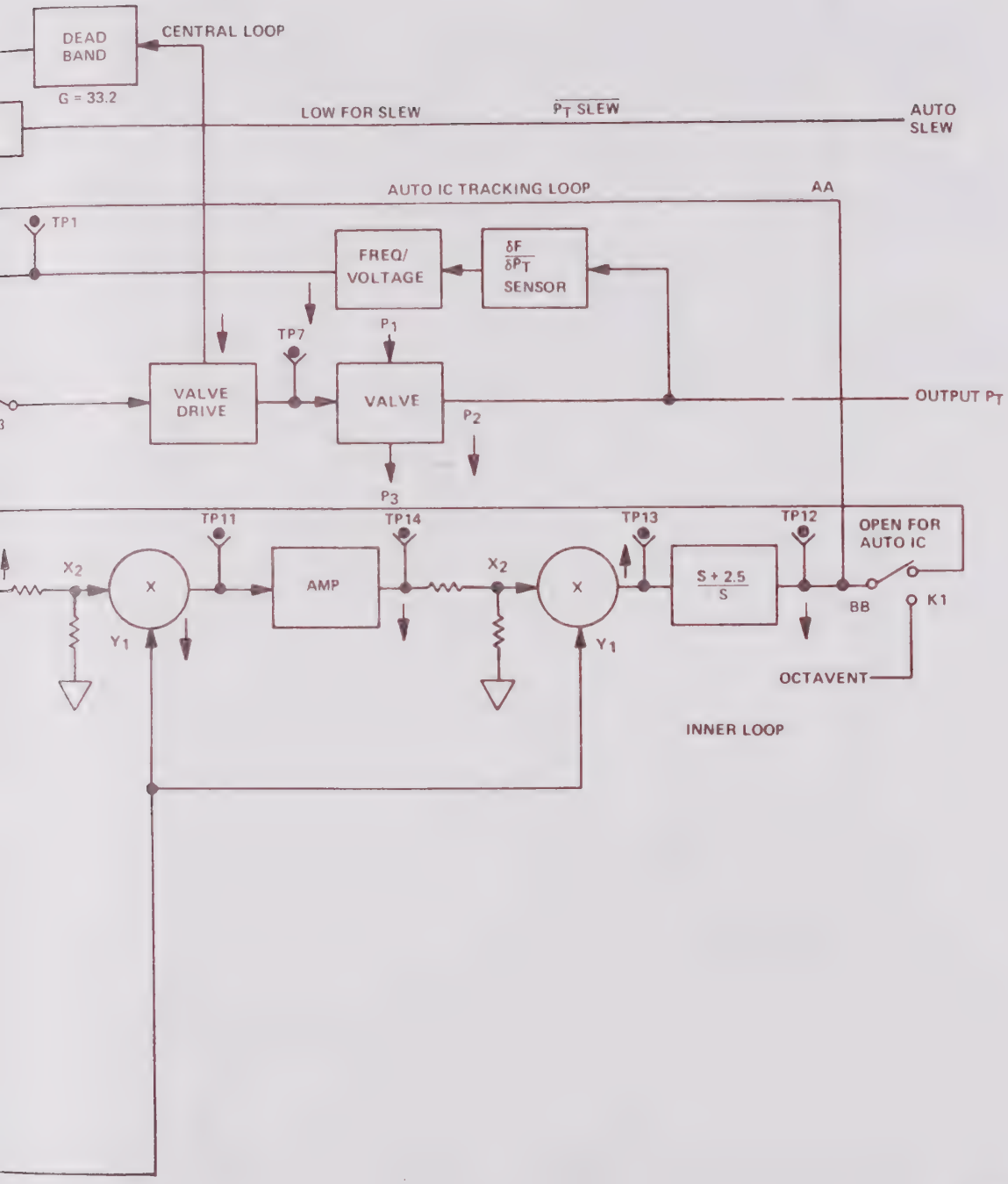
DEAD BAND
G = 33.2
CENTRAL LOOP
LOW FOR SLEW
$\overline{P_T \text{ SLEW}}$
AUTO SLEW
AUTO IC TRACKING LOOP
AA
TP1
FREQ/ VOLTAGE
$\frac{\delta F}{\delta P_T}$ SENSOR
TP7
P_1
VALVE DRIVE
VALVE
OUTPUT P_T
P_2
P_3
TP11
TP14
TP13
TP12
OPEN FOR AUTO IC
X_2
X
AMP
X_2
X
$\frac{S + 2.5}{S}$
BB
K1
Y_1
Y_1
OCTAVENT
INNER LOOP

44939

The variable gain control network is designed to provide a constant system gain by compensating for nonlinearities of the control valves (figure 4-6). The gain of the control valve varies over pressure and changes for exhaust contact, inlet contact, and no contact. Typical curves for these three states are stored in PROM for P_s and P_t. Thus, there are six typical gain-band width product curves stored, three for each control valve. The processor uses these stored curves to determine the proper electronic gain for the inner loops. This is accomplisned by sensing flapper inlet contact, exhaust contact, or no contact, and supplying the appropriate gain to the inner loop multipliers from the data stored.

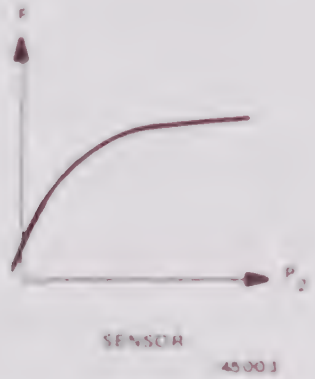

Sensor Response Curve
Figure 4-6

Typical gain curves for no flapper contact, inlet contact, and outlet contact are shown in figures 4-7, 4-8, and 4-9. The position of the control valve is determined by the nozzle contact detection circuitry on A8. The curve to be used in each channel is determined per table 4-5.

To compensate for variations in system gain from unit to unit, it is necessary to shift the gain curves stored in PROM. This is accomplisned by setting switches S4, S3, and S2 on card A6 to the desired settings. (This procedure will be described in table 4-17 at a later revision.) Table 4-6 shows the function assigned to each bit for switches S1 thru S4, and table 4-7 shows the multiplier factors available and the switch settings necessary to obtain them.

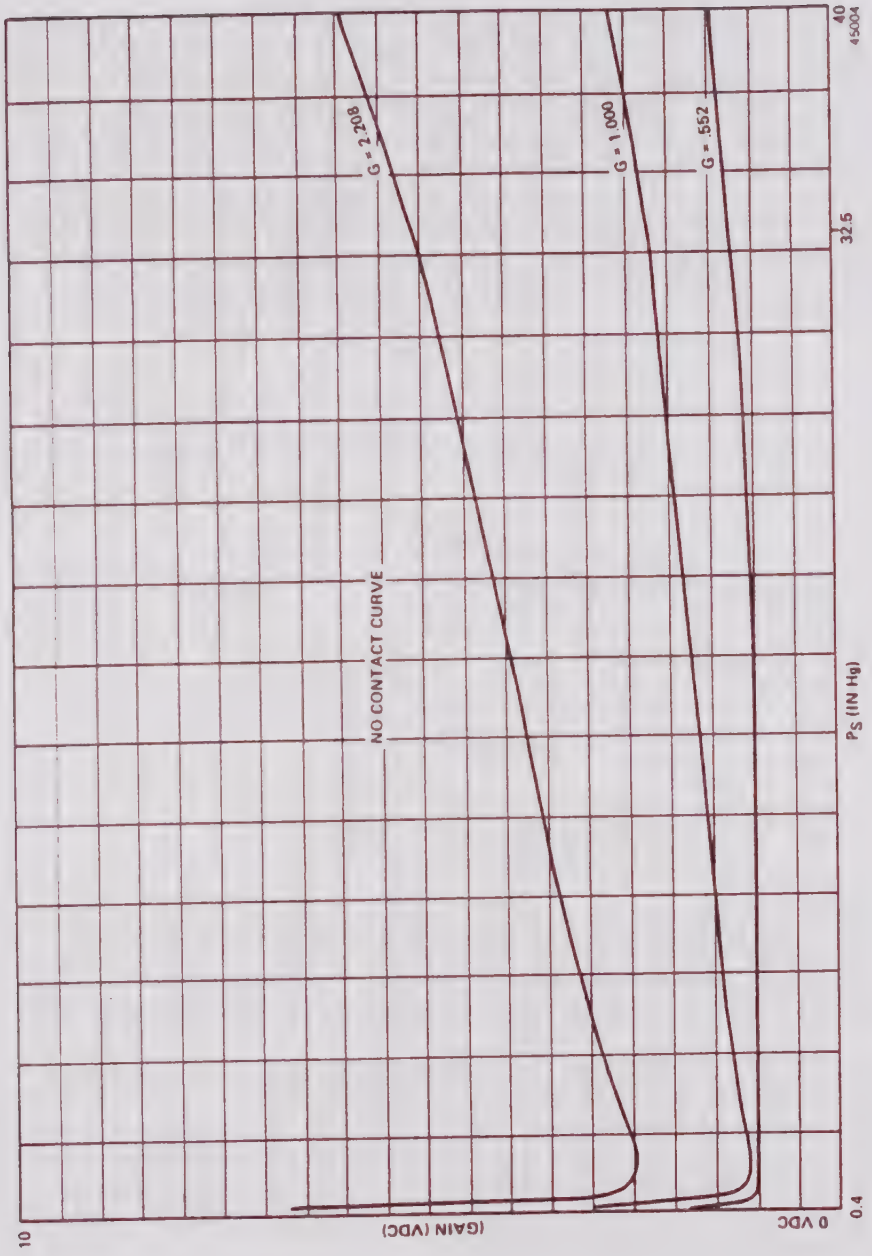

Control Valve Flapper - No Contact Gain Curve
Figure 4-7

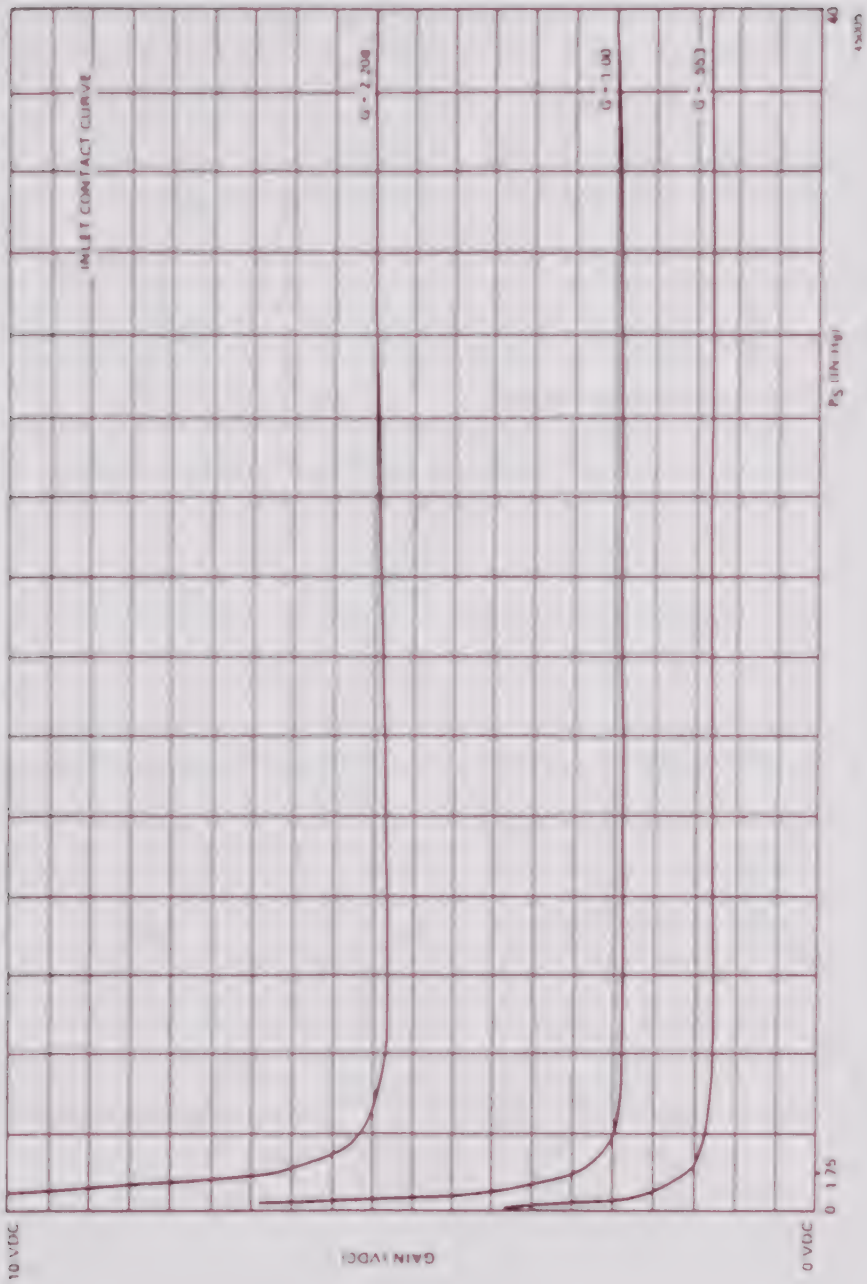

Control Valve Flapper - Inlet Contact Gain Curve
Figure 4-8

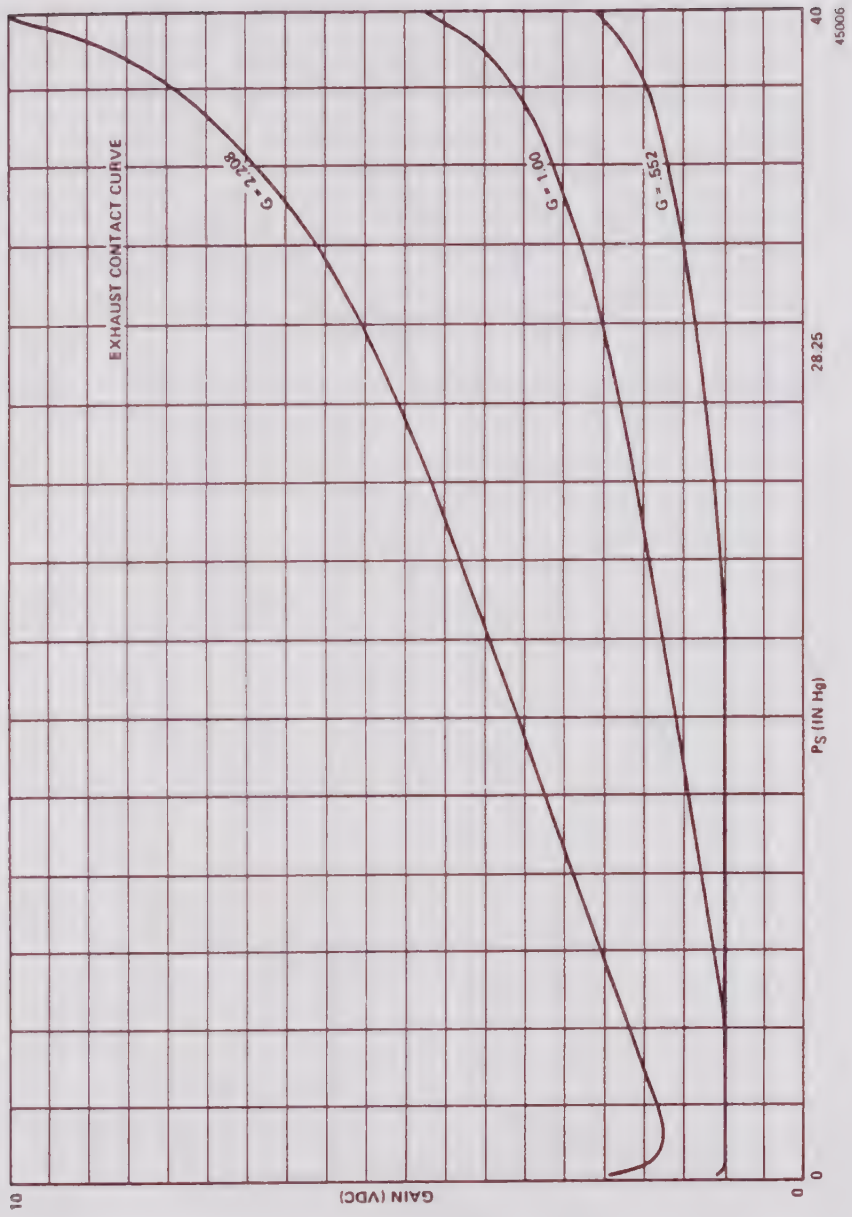

Control Valve Flapper - Exhaust Gain Curve
Figure 4-9

NO PX IC	NO PX EC	PX IC	PX EC	Action
0	0	1	1	Go to no contact curve. Also reset. Improbable to remain in this state.
0	1	1	0	Go to inlet contact curve.
1	0	0	1	Go to exhaust contact curve.
1	1	0	0	Go to no contact curve.

Gain Curve Determinants
Table 4-5

Switch No.	BIT 1	BIT 2	BIT 3	BIT 4	BIT 5	BIT 6	BIT 7	BIT 8
S1	PSCBP	PTCBP	PSCTA	PTCTA	PSCAL	PTCAL	HDOT2	HDOT1
S2	BPLIM	PADLOCK	X	X	MSB ← PS		LSB NC →	X
S3	X	MSB ← PS		LSB IC →	MSB ← PS		LSB EC →	MSB ← PT
S4	-NC →	LSB	MSB ← PT		LSB IC →	MSB ← PT		LSB EC →

Bit Function Assignments
Table 4-6

MSB		LSB	Multiplier
0	0	0	0.552
0	0	1	0.673
0	1	0	0.820
0	1	1	1.000
1	0	0	1.219
1	0	1	1.486
1	1	0	1.811
1	1	1	2.208

NOTE: Multiply V_{TP2} by appropriate multiplier.

Switch Gain Multipliers
Table 4-7

The net result of this fast, high resolution analog inner loop is to provide a one-to-one correspondence between the command voltage, V_1, and the output pressure P_2. This inner loop has the advantage of providing extremely fast and smooth transient pressure response with excellent short term stability. The only disadvantage is the long term analog drift (inherent in all analog circuitry) that varies with time and temperature. However, this disadvantage is completely removed by the digital outer loop.

The central loop is used to detect P_s or P_t saturation and implement auto slew. During normal (nonsaturated) operation, there is no output from the dead band circuit, and $\overline{P_X \text{ SLEW}}$ is high. When a control valve is driven to saturation, the dead band circuit output makes the comparator output (P_X SLEW) go low to tell the processor to go into auto slew, and provides negative feedback through the diode dead band circuit to keep the central loop in control by preventing the main integrator from running away to saturation.

The auto IC tracking loop is designed to prevent a large drive current from being applied to a control valve when going from measure mode to control mode by providing negative feedback to the main integrator when the ADT-222B is in a measure mode to keep the loop nulled out.

2. D. Digital Outer Loop Control System

The description of the digital outer loop is given in three levels of ascending complexity. (The simplest block diagram is shown in figure 4-10. The inner loop is shown in the upper right corner of figure 4-10.)

The basic purpose of the outer loop is to generate the proper command voltage, V_1, to obtain the desired pressure response from the inner loop. The outer loop hardware is mostly digital and is controlled by the system software to generate V_1 to compensate for the offset and long term drift errors inherent in the analog inner loop. To accomplish this, the sensor output, which is fed into the frequency to DC converter of the inner loop, is also fed into a frequency to count (F/C) converter. The output of the F/C converter is used to develop a digital number that is proportional to the measured pressure and is subtracted from the digital command signal. The resultant digital error signal is changed into an analog error signal by the D/A and used by the main integrator section to generate V_1. The main integrator section also uses the rate command to determine the rate at which V_1 is to change to cause P_2 to change at the desired rate.

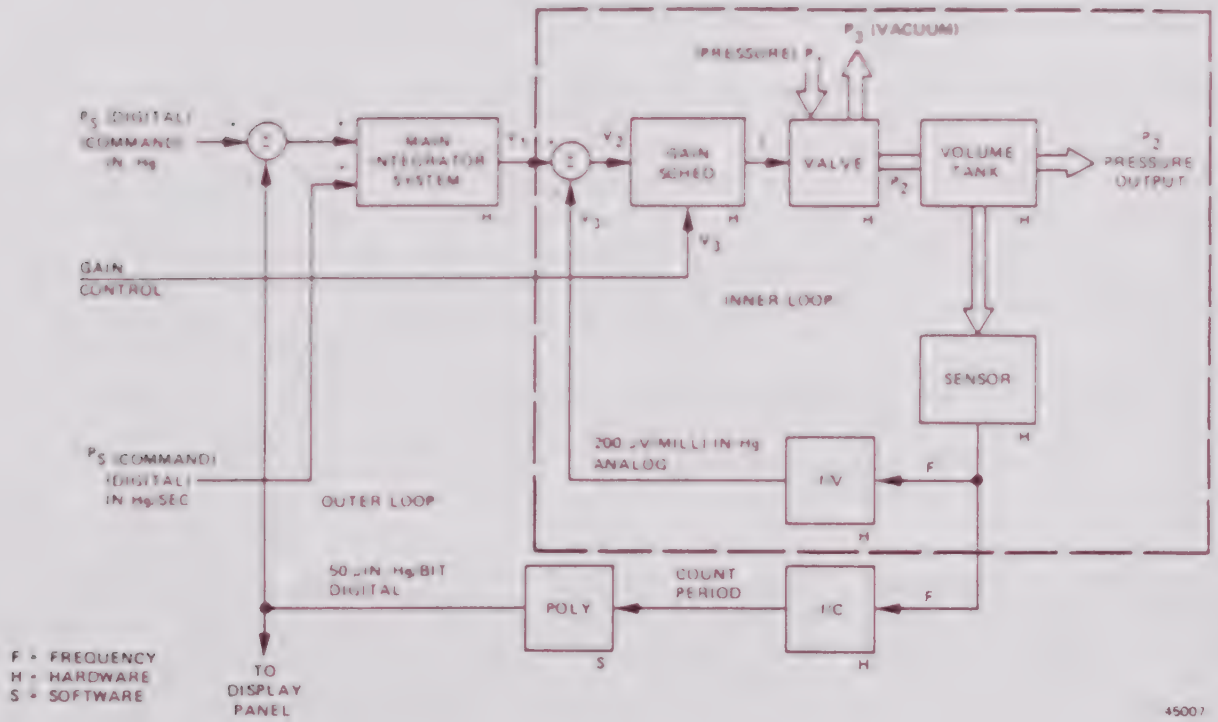

Outer Loop Block Diagram (Simplified)
Figure 4-10

The F/C output is a digital number (m) which specifies the sensor count, or more precisely, the period of the sensor output signal. The equation for the conversion is:

$$m = \frac{N F_C}{F_p}$$

where N is the number of sensor periods averaged, F_C is the frequency of the high speed reference clock (37.5 MHz), and F_p is the sensor frequency. Since N and F_C are constants, m is inversely proportional to F_p and a nonlinear function of pressure.

The digital processor calculates the absolute pressure in inches of Hg by inserting m as the independent variable of a sixth order, 6-segment polynomial equation. The 42 coefficients of the six polynomial segments are the calibration constants of the sensor. The calibration constants are calculated during initial calibration of the sensor and are stored in programmable read only memory (PROM) chips on the calibration memory circuit card. The PROM contents are custom-blown for each sensor. Calculation of the polynomial determines the absolute pressure applied to the sensor. For example, segment three of the P_t polynomial covers the pressure range of 24.000 to 46.000 inches Hg absolute. The equation for this segment is:

$$P_t = A_0 + A_1m + A_2m^2 + A_3m^3 + A_4m^4 + A_5m^5 + A_6m^6$$
$$24.000 < P_t < 46.000 \text{ inches Hg. ABS}$$

where A_0 thru A_6 are stored in the PROM and m is the count. This value of P_t is further corrected for sensor aging effects by conversion in another polynomial which uses the positions of the calibration switches for its coefficients. The calibration switches are set during subsequent recalibration of the system.

The end result of the processor calculations is a two's complement binary word that specifies the exact pressure applied to the sensor. The processor transmits this word to the display panel in BCD for readout on the gas discharge displays. The processor also subtracts this measured pressure from the command pressure to determine a difference pressure (error) word which it sends to the main integrator section, along with the rate command word, to generate the proper V_1 for driving the inner loop.

As previously stated, all of the operations within the ADT-222B are performed in terms relating to inches of mercury. It is the function of the digital processor to convert all input commands to these units for the internal control system and to convert the measured values from these units back into the units applicable to the display mode selected by the operator. The processor also controls the generation of pressures within the system by "talking" to the applicable circuits with digital words. Operation of the outer loop, therefore, is a function of the processor.

The pressure control circuits of the ADT-222B employ input registers to store the command words from the processor, a digital-to-analog (D/A) converter for converting the command words into their voltage equivalents, and sample and hold (S&H) circuits for remembering the resultant command voltages.

All operations of the processor (and the ADT-222B) are performed at least once during each processor cycle. The time phasing of key operations is fixed and is controlled by timing and control cards. The time required to complete each processor cycle is 224 milliseconds, derived from the master clock pulse repetition frequency (PRF) of 4.47 Hz. For simplicity, a processor cycle will be referred to as a PRF (pulse repetition frequency).

During each PRF, the processor interrogates the front panel for input commands, converts the input values to inches of Hg, compares these values with the measured values from the sensors, determines the appropriate response to be obtained during that PRF, and transmits the appropriate command values to the pressure control circuitry to initiate the desired pressure response. It also transmits the measured values to the front panel for display to the operator. (For a more precise explanation of the operation of the digital outer loop, see figure 4-11, which includes the functional blocks of the main integrator section.) Below each functional block in this diagram and the diagrams to follow will be either an S or an H to specify whether that block specifies a primarily software function, performed by the processor, or a primarily hardware function, performed by the control circuitry.

During each PRF, the processor calculates the existing pressure, P_2, from the output of the F/C converter and interrogates the front panel for the input commands. It then performs the necessary calculations to convert the front panel commands into the proper units. The processor uses the existing pressure as a reference to calculate an instantaneous rate in inches Hg/second.

The values stored in these registers are sequenced into a D/A converter and their analog equivalents are fed into S&H circuits. The S&H circuits store the analog commands and their output values drive the main integrator, which drives the inner loop to obtain the desired pressure response for the PRF.

During each subsequent PRF, the whole process is repeated, and when the response approaches the final value, the successive values being placed into the error register get smaller and smaller because the pressure response gets closer and closer to the commanded final value stored in the final value register.

When precision rate is selected by the operator, an additional integrator is switched into the main integrator section. The rate integrator is an operational amplifier which integrates the output of the error S&H and applies it to the main integrator. Use of this fourth driving input to the main integrator provides a transition rate that is normally within ±1 percent of the commanded rate.

As the response approaches the final value, the processor evaluates the commanded rate. When the response reaches a point where continuing at the commanded rate would cause the response to overshoot the final value, the processor decreases the value in the rate registers.

When the difference between the final value and the value in the command register is 50 microinches of Hg or less, the final value is placed into the command register and the processor starts a 5-second timer. By this time, the values in both rate registers have been reduced to zero. After 5 seconds, the function of the digital integrator (DI) register comes into play.

During pressure transition and the 5-second delay, the DI register is held constant. Its entire function is to overcome the long term offset drift effects of the analog inner loop. After the 5-second delay, the contents of the error register are algebraically added to the contents of the DI register. The resultant value is then converted to an analog voltage by the D/A converter and used by the S&H that was used previously for the FFF rate value to drive the main integrator to overcome the inner loop offset error. This process is repeated for each PRF to drive the absolute loop error to zero. When the value in the error register is zero, the DI register contains the value of the total analog offset errors in the inner and outer loops. Thus, the pressure is controlled exactly to the commanded value and the displayed pressure equals the commanded pressure.

Until new commands are fed into the display panel, the system remains in a state referred to as pressure maintenance and the error and DI registers are updated every PRF to compensate for any pressure fluctuations which might be generated by either the ADT-222B or UUT.

During pressure maintenance, a dynamic input can be used to drive the pressure system to produce pressure waves in response to the input waveform. The dynamic input is applied directly to the summing amplifier of the inner loop to provide fast and accurate response. To avoid the possibility of the dynamic response being interpreted as offset error by the processor, the DI automatic offset adjustment is held constant and the error register value is set at zero during the dynamic input mode. Because of this, the pressure at zero dynamic input may drift slightly (up to 0.005 inch of Hg per minute) due to thermal effects on the inner loop amplifier offset voltages.

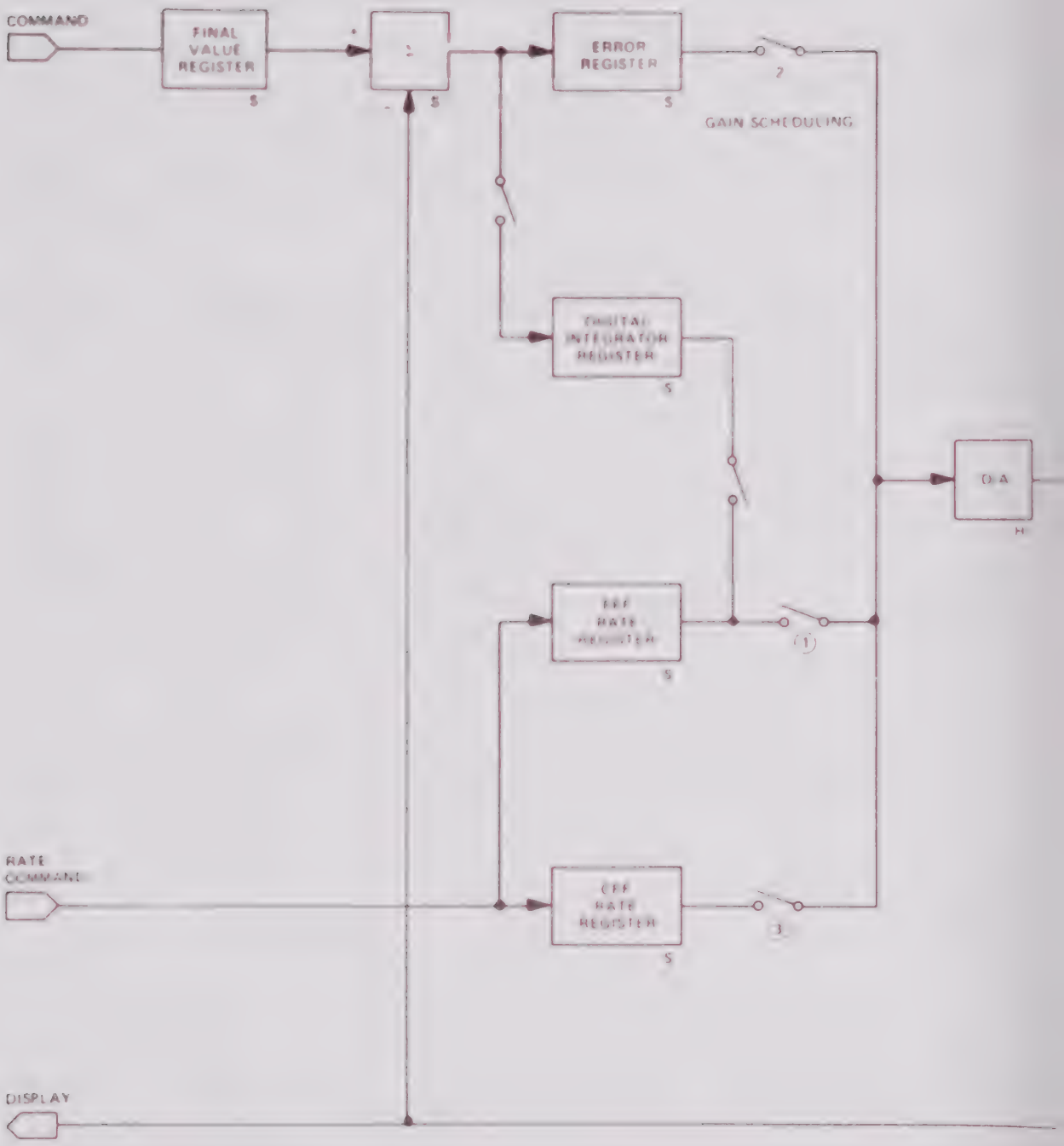

Outer Loop Block Diagram
Figure 4-11

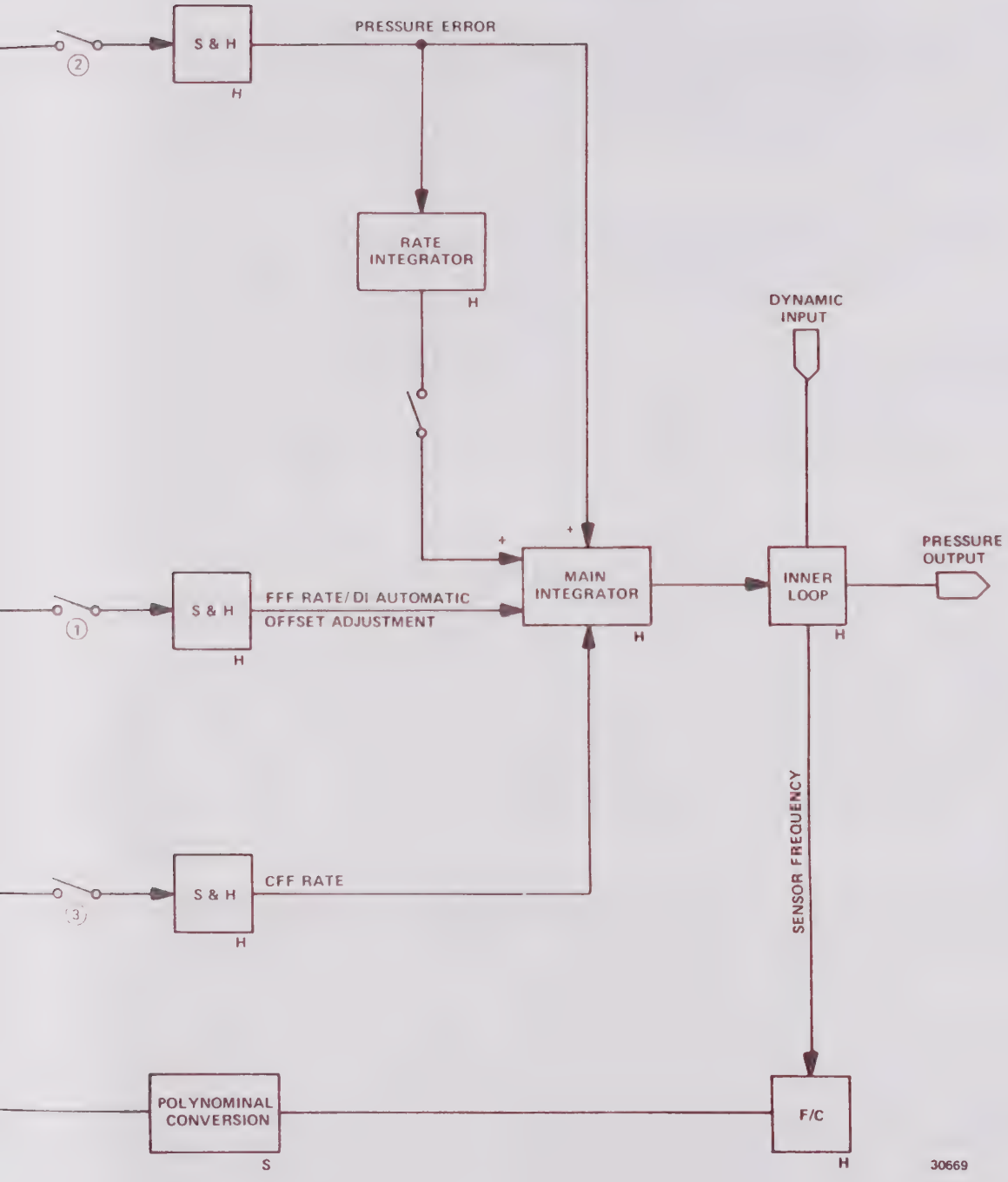
S & H
H
PRESSURE ERROR
RATE
INTEGRATOR
H
DYNAMIC
INPUT
+
+
MAIN
INTEGRATOR
H
INNER
LOOP
H
PRESSURE
OUTPUT
S & H
H
FFF RATE/DI AUTOMATIC
OFFSET ADJUSTMENT
SENSOR FREQUENCY
S & H
H
CFF RATE
POLYNOMINAL
CONVERSION
S
F/C
H
30669

The processor interrogates the front panel multiplexer registers for changes in the command words. If the command words are new (i.e., if the COMMAND ENTER button has been pressed since the last PRF), the commands are converted to pressure units, if necessary, and stored in final value registers. As previously explained, the existing pressure and the commanded pressure rate are used to determine the pressure change to be accomplished during the PRF, and this pressure step is added to the command register.

As previously explained, the values stored in the rate registers are gradually reduced to zero from the values in the rate command registers once the pressure output gets close to its final value. This is done to aid in the elimination of overshoot. (Loop adder blocks are not included in figure 4-11 but are shown in figures 4-12 and 4-13.) These blocks are only used in the P_t outer loop system and only when the ADT-222B is operating in a combined display mode. When operating in a combined display mode (either P_S/Q_C or altitude/airspeed), the command values and measured pressure from the P_S system must be used to coordinate the operation of the P_t system. In these combined modes, the rate of the P_S change is added to the airspeed or Q_C commanded rate to determine the appropriate P_t rate. Similarly, the incremental P_S command from the command register is added to the incremental Q_C command to determine the incremental P_t command, and the measured P_S output is subtracted from the measured P_t output to determine the airspeed or Q_C value to be displayed.

With the exception of the intraloop connections just described, the only differences in operation among all three control or four measure modes are purely mathematical. Since the differences are generated by the system software, they are not further explained here. The functional block diagrams for the three control modes are shown in figures 4-12, 4-13, and 4-14.

2. E. Automatic Slew

In previous ADT-222 systems, if the P_s or P_t side was driven into saturation, the resulting flight profile was not the same as the commanded flight profile, because the nonsaturated side performed normally, but the saturated side did not get to the commanded value.

In order to maintain the commanded flight profile for the P_s/P_t, H/V_c, and P_s/Q_c control modes, the ADT-222B extends the total feed forward (TFF) signal to provide ample time for the saturated channel to reach the commanded value, and in the case of the combined modes (H/V_c and P_s/Q_c), the nonsaturated side is slowed by the same proportion as the saturated side. This is accomplished by adding a central loop to each channel to detect control valve saturation and signal the processor to implement auto slew.

When the ADT-222B goes into auto slew, the functional block diagrams of figures 4-12, 4-13, and 4-14 become somewhat changed in front of the digital adder. Signal flow is changed in the H/V_c, P_s/Q_c, and P_s/P_t command modes, and an additional signal ($\dot{P}_{s_m}$ or $\dot{P}_{t_m}$) and stage (ratio multiplier) are added to the H/V_c and P_s/Q_c command modes.

The auto slew functional block diagrams up to the digital adder are shown in figures 4-15, 4-16, and 4-17 for P_s saturation; and figures 4-18, 4-19, and 4-20 for P_t saturation.

Altitude/Airspeed (H/V_C) Functional Block Diagram
Figure 4-12 (Sheet 1 of 2)

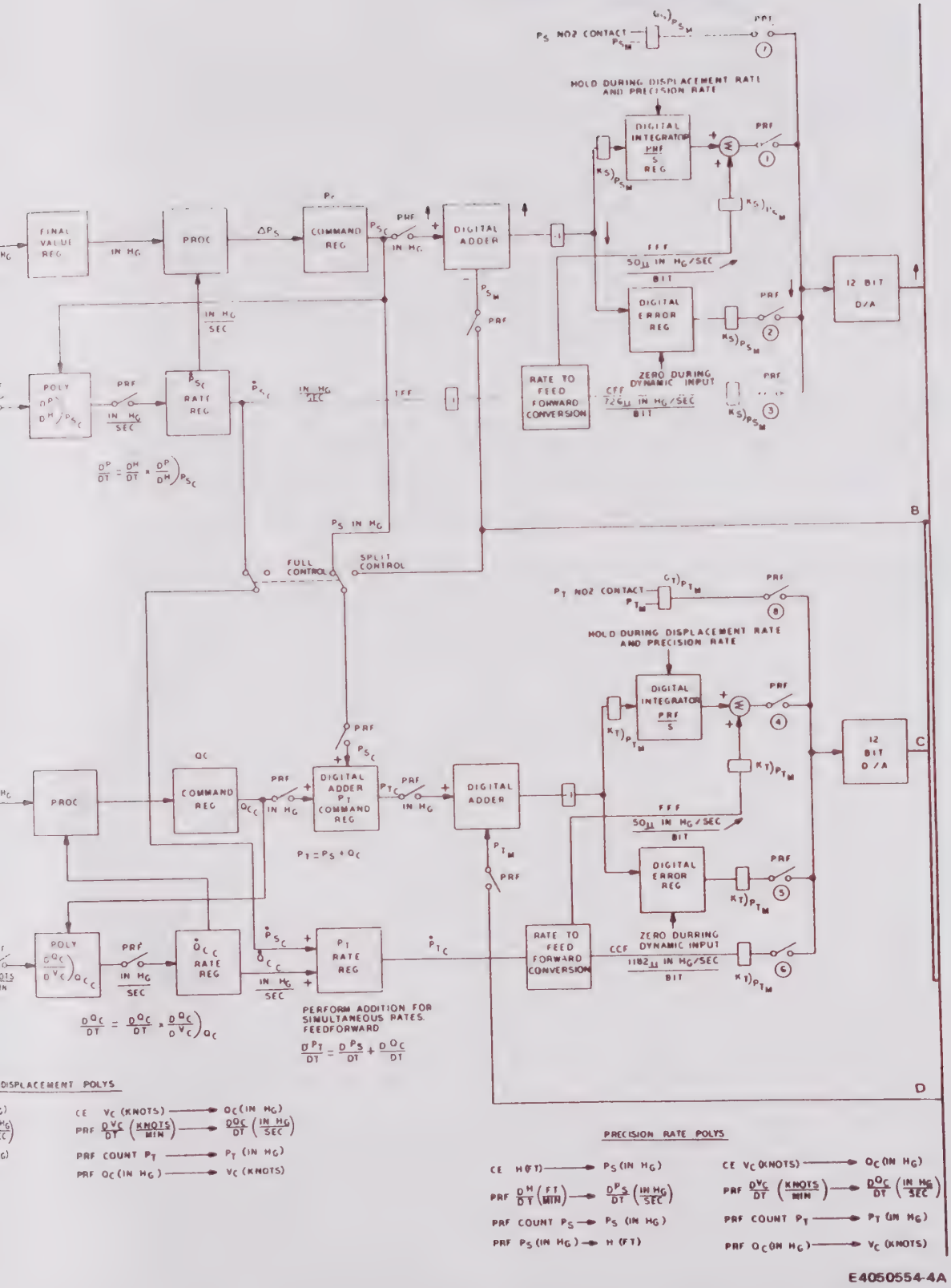
PS NO2 CONTACT
HOLD DURING DISPLACEMENT RATE AND PRECISION RATE
DIGITAL INTEGRATOR PRF / S REG
DIGITAL ADDER
DIGITAL ERROR REG
12 BIT D/A
RATE TO FEED FORWARD CONVERSION
ZERO DURING DYNAMIC INPUT
FINAL VALUE REG
PROC
COMMAND REG
POLY
RATE REG
FULL CONTROL
SPLIT CONTROL
PT NO2 CONTACT
DIGITAL ADDER PT COMMAND REG
PT = PS + QC
PERFORM ADDITION FOR SIMULTANEOUS RATES. FEEDFORWARD
DISPLACEMENT POLYS
PRECISION RATE POLYS
E4050554-4A

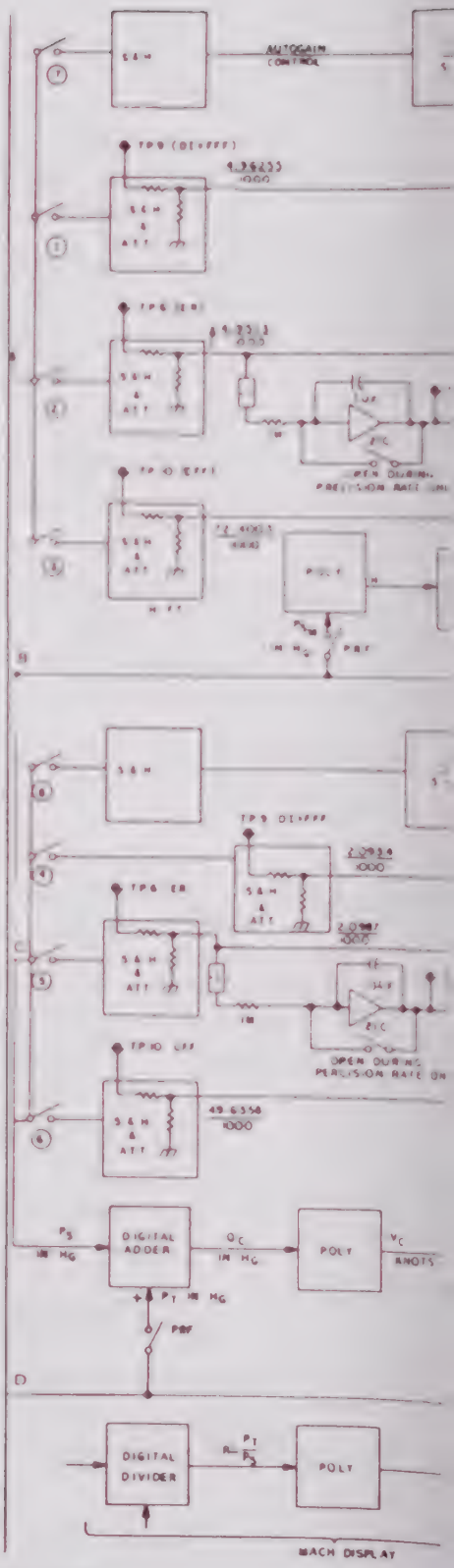

$$R = \left[5\left[\left(\frac{P_T}{P_S}\right)^{2/7} - 1\right]\right]^{1/2} \text{ FOR } R \leq 1.0$$

$$R = \frac{P_T}{P_S} = 166.92162\left[\frac{M^7}{7M^2 - 1^{2.5}}\right] \text{ FOR } R \geq 1.0$$

Altitude/Airspeed (H/V_C) Functional Block Diagram
Figure 4-12 (Sheet 2)

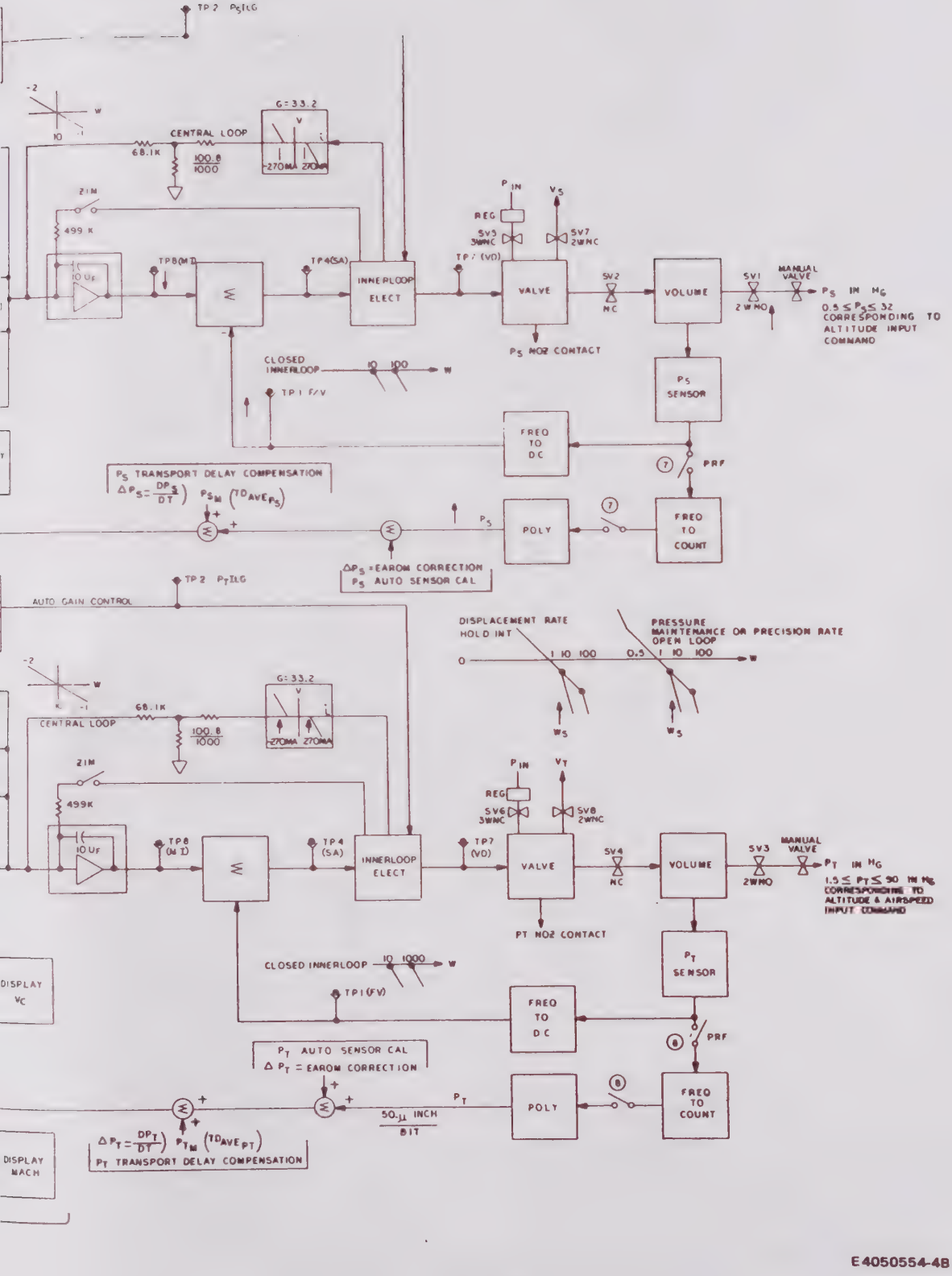
TP2 P_SILG
-2
W
10
-1
CENTRAL LOOP
68.1K
100.8
1000
G=33.2
V
270MA
270MA
ZIM
499 K
10 UF
TP8(MI)
TP4(SA)
INNERLOOP ELECT
P_{IN}
V_S
REG
SV3 3WNC
SV7 2WNC
TP7 (VD)
VALVE
SV2 NC
VOLUME
SV1 2WNO
MANUAL VALVE
P_S IN HG
$0.5 \leq P_S \leq 32$ CORRESPONDING TO ALTITUDE INPUT COMMAND
P_S NO2 CONTACT
CLOSED INNERLOOP
10
100
W
TP1 F/V
P_S SENSOR
FREQ TO DC
PRF
P_S TRANSPORT DELAY COMPENSATION
$\Delta P_S = \frac{DP_S}{DT}$ P_{S_M} $(TD_{AVE_{P_S}})$
P_S
POLY
FREQ TO COUNT
ΔP_S = EAROM CORRECTION
P_S AUTO SENSOR CAL
TP2 P_TILG
AUTO GAIN CONTROL
DISPLACEMENT RATE HOLD INT
0
1 10 100
PRESSURE MAINTENANCE OR PRECISION RATE OPEN LOOP
0.5
1 10 100
W_S
-2
W
-1
68.1K
CENTRAL LOOP
100.8
1000
G=33.2
V
270MA
270MA
ZIM
499K
10 UF
TP8 (M I)
TP4 (SA)
INNERLOOP ELECT
TP7 (VD)
P_{IN}
V_T
REG
SV6 3WNC
SV8 2WNC
VALVE
SV4 NC
VOLUME
SV3 2WNO
MANUAL VALVE
P_T IN HG
$1.5 \leq P_T \leq 90$ IN HG CORRESPONDING TO ALTITUDE & AIRSPEED INPUT COMMAND
PT NO2 CONTACT
CLOSED INNERLOOP
10
1000
W
TP1(FV)
P_T SENSOR
FREQ TO DC
PRF
DISPLAY V_C
P_T AUTO SENSOR CAL
ΔP_T = EAROM CORRECTION
P_T
$50.\mu$ INCH / BIT
POLY
FREQ TO COUNT
$\Delta P_T = \frac{DP_T}{DT}$ P_{T_M} $(TD_{AVE_{P_T}})$
P_T TRANSPORT DELAY COMPENSATION
DISPLAY MACH

E4050554-48

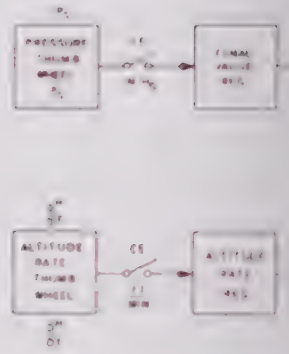

P_S/Q_C Functional Block Diagram
Figure 4-13 (Sheet 1 of 2)

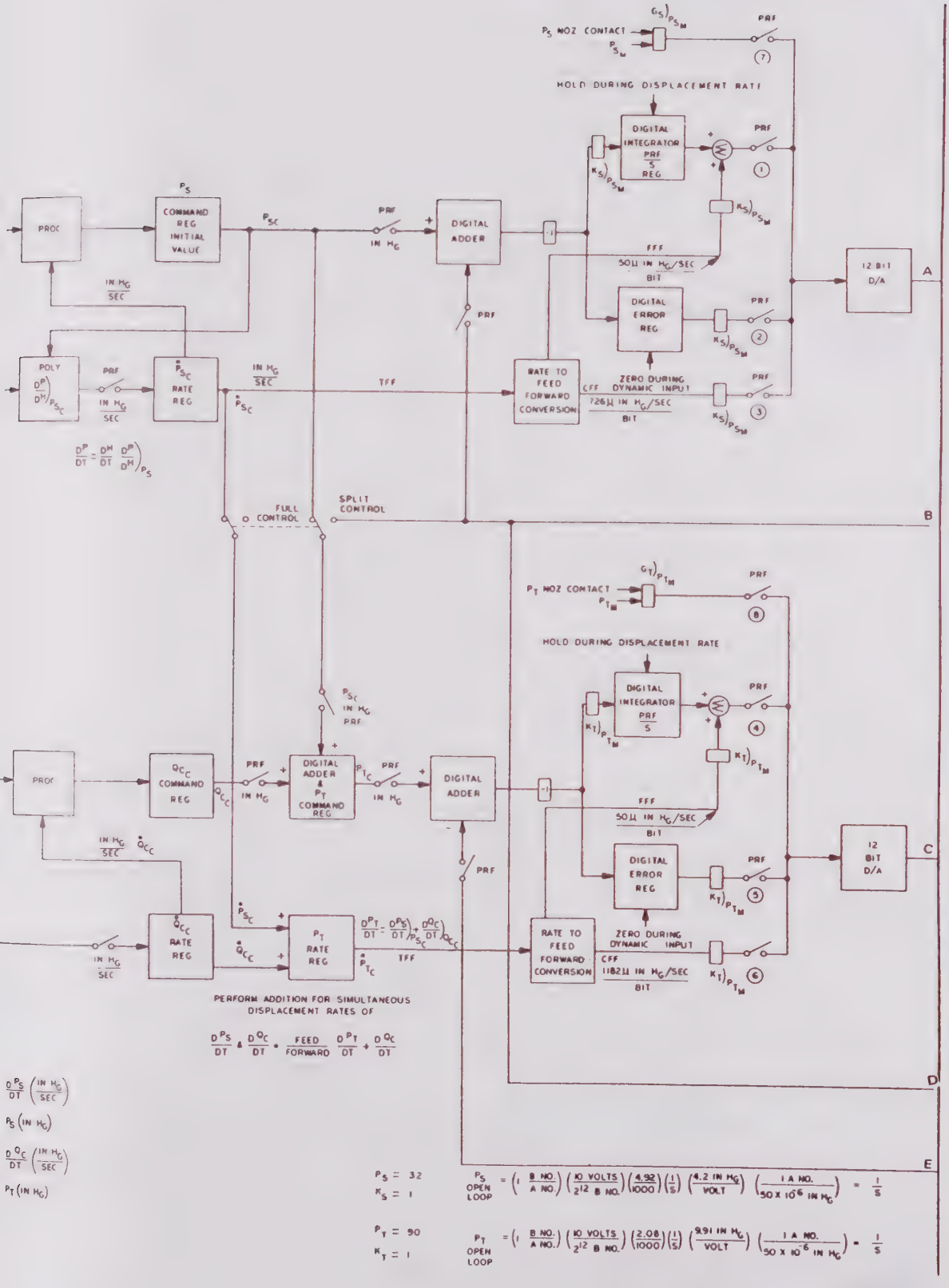
PROC
COMMAND REG INITIAL VALUE
DIGITAL ADDER
DIGITAL INTEGRATOR PRF/S REG
DIGITAL ERROR REG
RATE TO FEED FORWARD CONVERSION
ZERO DURING DYNAMIC INPUT
50μ IN MG/SEC/BIT
726μ IN MG/SEC/BIT
12 BIT D/A
RATE REG
POLY
FULL CONTROL
SPLIT CONTROL
PS MOZ CONTACT
HOLD DURING DISPLACEMENT RATE
PT MOZ CONTACT
DIGITAL ADDER & PT COMMAND REG
QCC COMMAND REG
PT RATE REG
1182μ IN MG/SEC/BIT
PERFORM ADDITION FOR SIMULTANEOUS DISPLACEMENT RATES OF
FEED FORWARD
PS = 32
KS = 1
PT = 90
KT = 1
E4050554-3A

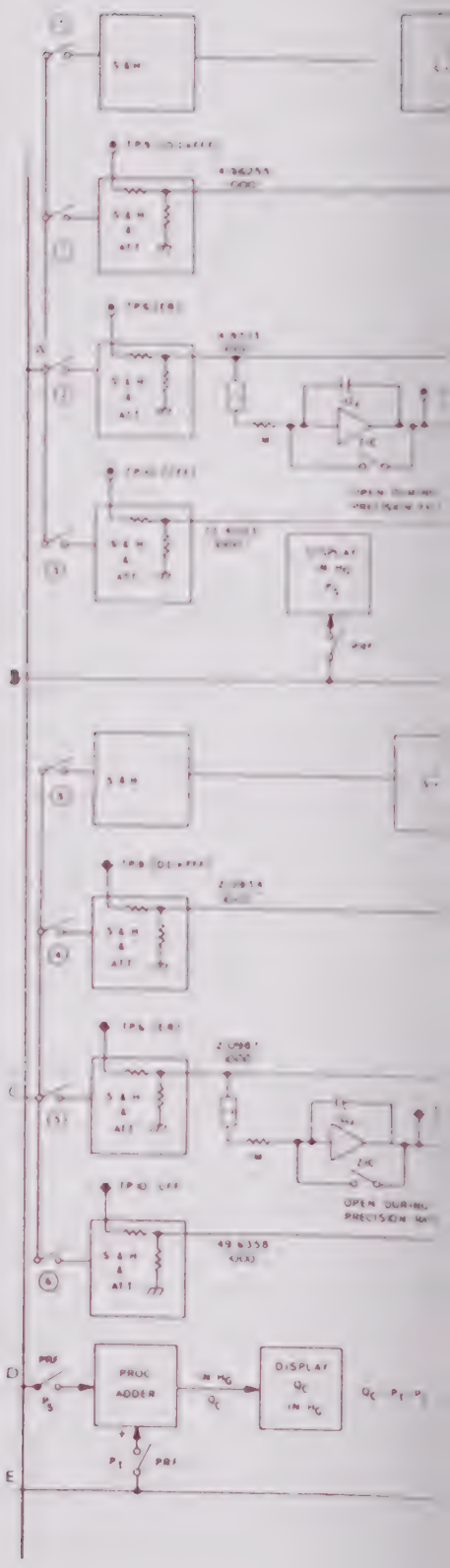

P_S/Q_C Functional Block Diagram
Figure 4-13 (Sheet 2)

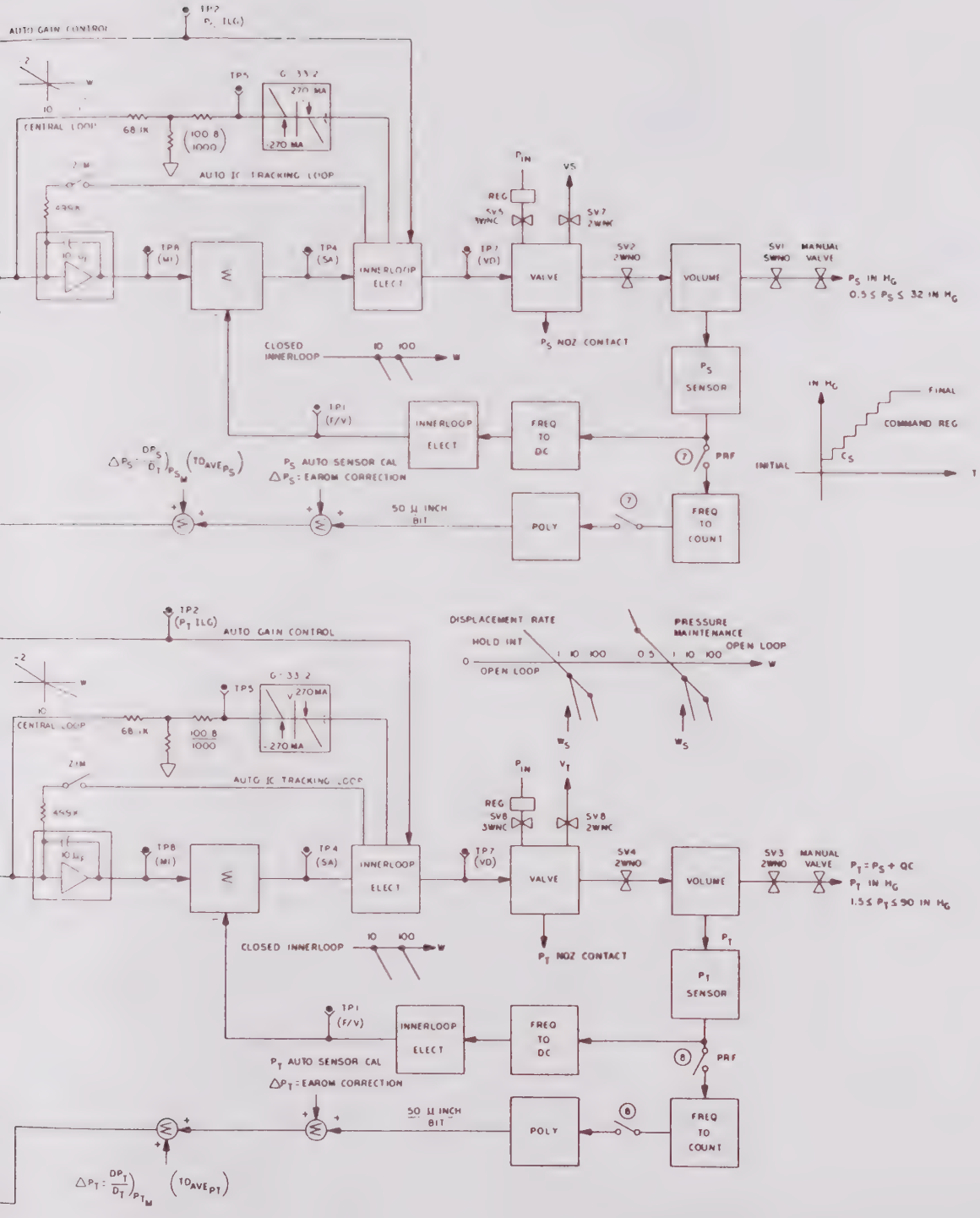
AUTO GAIN CONTROL
CENTRAL LOOP
AUTO IC TRACKING LOOP
INNERLOOP ELECT
VALVE
VOLUME
MANUAL VALVE
P_S IN H_G
$0.5 \le P_S \le 32$ IN H_G
P_S NOZ CONTACT
CLOSED INNERLOOP
P_S SENSOR
FREQ TO DC
FREQ TO COUNT
POLY
PRF
FINAL
COMMAND REG
INITIAL
P_S AUTO SENSOR CAL
ΔP_S: EAROM CORRECTION
50 μ INCH BIT
DISPLACEMENT RATE
HOLD INT
OPEN LOOP
PRESSURE MAINTENANCE
$P_T = P_S + QC$
P_T IN H_G
$1.5 \le P_T \le 90$ IN H_G
P_T NOZ CONTACT
P_T SENSOR
P_T AUTO SENSOR CAL
ΔP_T: EAROM CORRECTION

E4050554-3B

NOTES:

1. DIGITAL INTEGRATOR WILL BE HELD 5 SEC AFTER END OF DISPLACEMENT RATE AND PRECISION RATE. END IS DEFINED AS THE PRF THAT COMMAND REG IS SET TO FINAL REG.
2. DISPLAY WILL AVERAGE 4 PRF.
3. X MEANS KEEP THESE EVENTS TO THE SAME PHASE OF EACH PRF (4 PLACES EACH LOOP).
4. SYSTEM NOT CAPABLE OF SIMULTANEOUS RATES OF BOTH P_S AND Q_C AT MAXIMUM RATES OF 40,000 FT/MIN AND 500 KNOTS/MIN.
5. THE DIFFERENCE IN VELOCITY ERRORS BETWEEN P_S AND P_T IS THE Q_C TRANSIENT ERROR.
6. $PRF = \frac{1}{223.6982 \text{ MILLISECONDS}}$

P_S/P_t Functional Block Diagram
Figure 4-14 (Sheet 1 of 2)

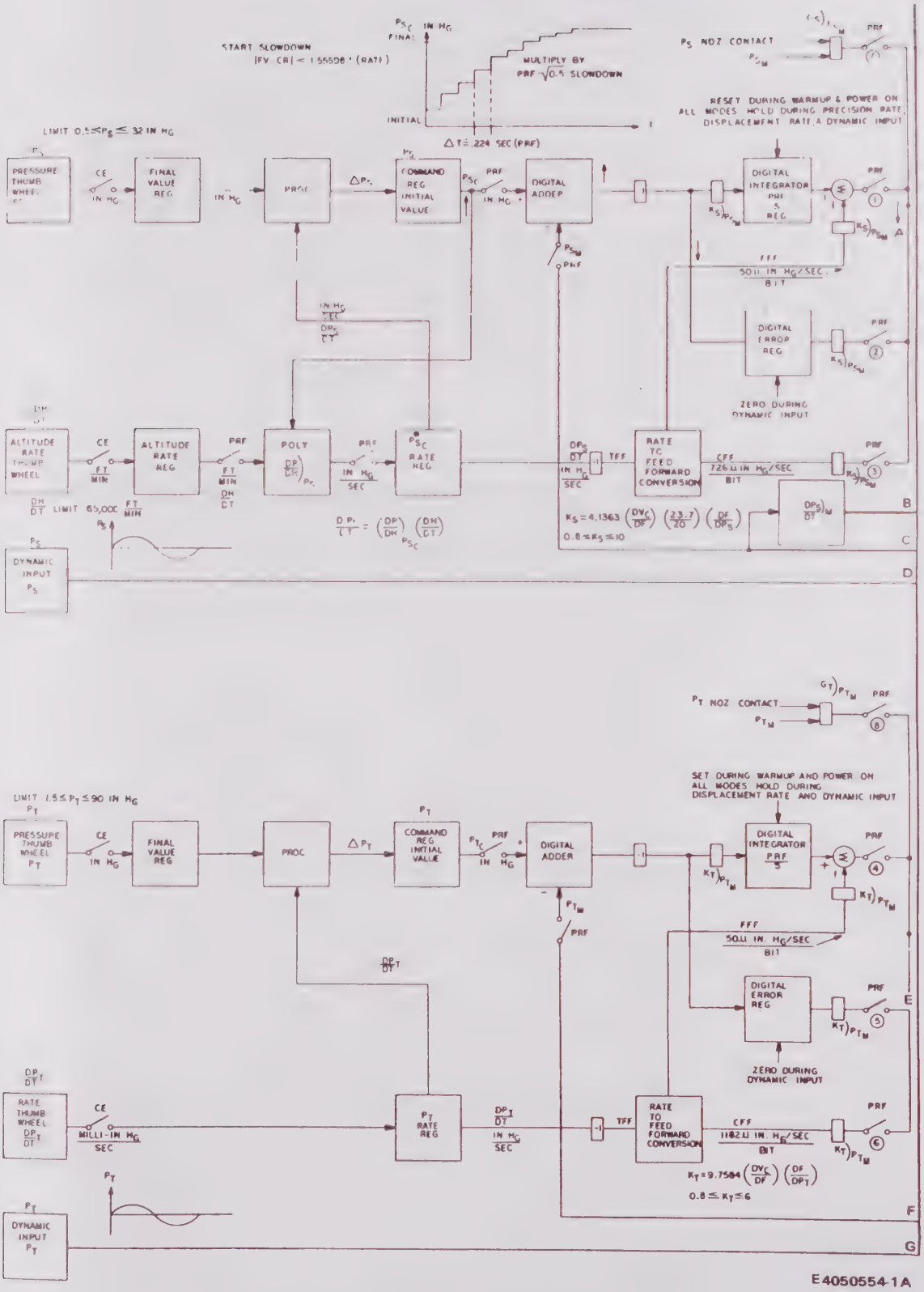
START SLOWDOWN
IFV CR| < 155508 * (RATE)
MULTIPLY BY PRF √0.5 SLOWDOWN
INITIAL
FINAL
Δt = .224 SEC (PRF)
Ps NOZ CONTACT
RESET DURING WARMUP & POWER ON
ALL MODES HOLD DURING PRECISION RATE, DISPLACEMENT RATE, & DYNAMIC INPUT
LIMIT 0.5 ≤ Ps ≤ 32 IN HG
PRESSURE THUMB WHEEL
CE
FINAL VALUE REG
PROC
COMMAND REG INITIAL VALUE
DIGITAL ADDER
DIGITAL INTEGRATOR PRF / S REG
50Ω IN HG/SEC / BIT
DIGITAL ERROR REG
ZERO DURING DYNAMIC INPUT
ALTITUDE RATE THUMB WHEEL
ALTITUDE RATE REG
POLY
RATE REG
RATE TO FEED FORWARD CONVERSION
726Ω IN HG/SEC / BIT
LIMIT 65,000 FT/MIN
DYNAMIC INPUT Ps
Ks = 4.1363 (DVc/DF) (23.7/20) (DF/DPs)
0.8 ≤ Ks ≤ 10
A
B
C
D
Pt NOZ CONTACT
SET DURING WARMUP AND POWER ON
ALL MODES HOLD DURING
DISPLACEMENT RATE AND DYNAMIC INPUT
LIMIT 1.5 ≤ Pt ≤ 90 IN HG
PRESSURE THUMB WHEEL
Pt REG
RATE THUMB WHEEL
MILLI-IN HG/SEC
1182Ω IN HG/SEC / BIT
Kt = 9.7584 (DVc/DF) (DF/DPt)
0.8 ≤ Kt ≤ 6
E
F
G

E4050554-1A

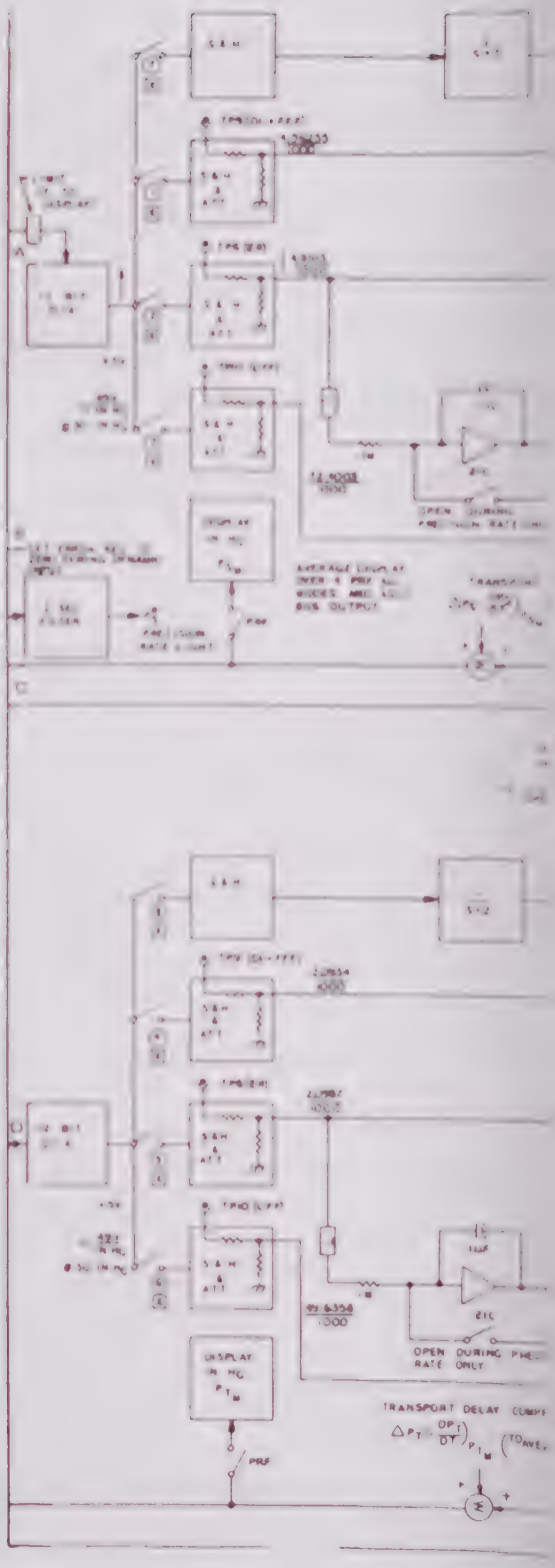

P_s/P_t Functional Block Diagram
Figure 4-14 (Sheet 2)

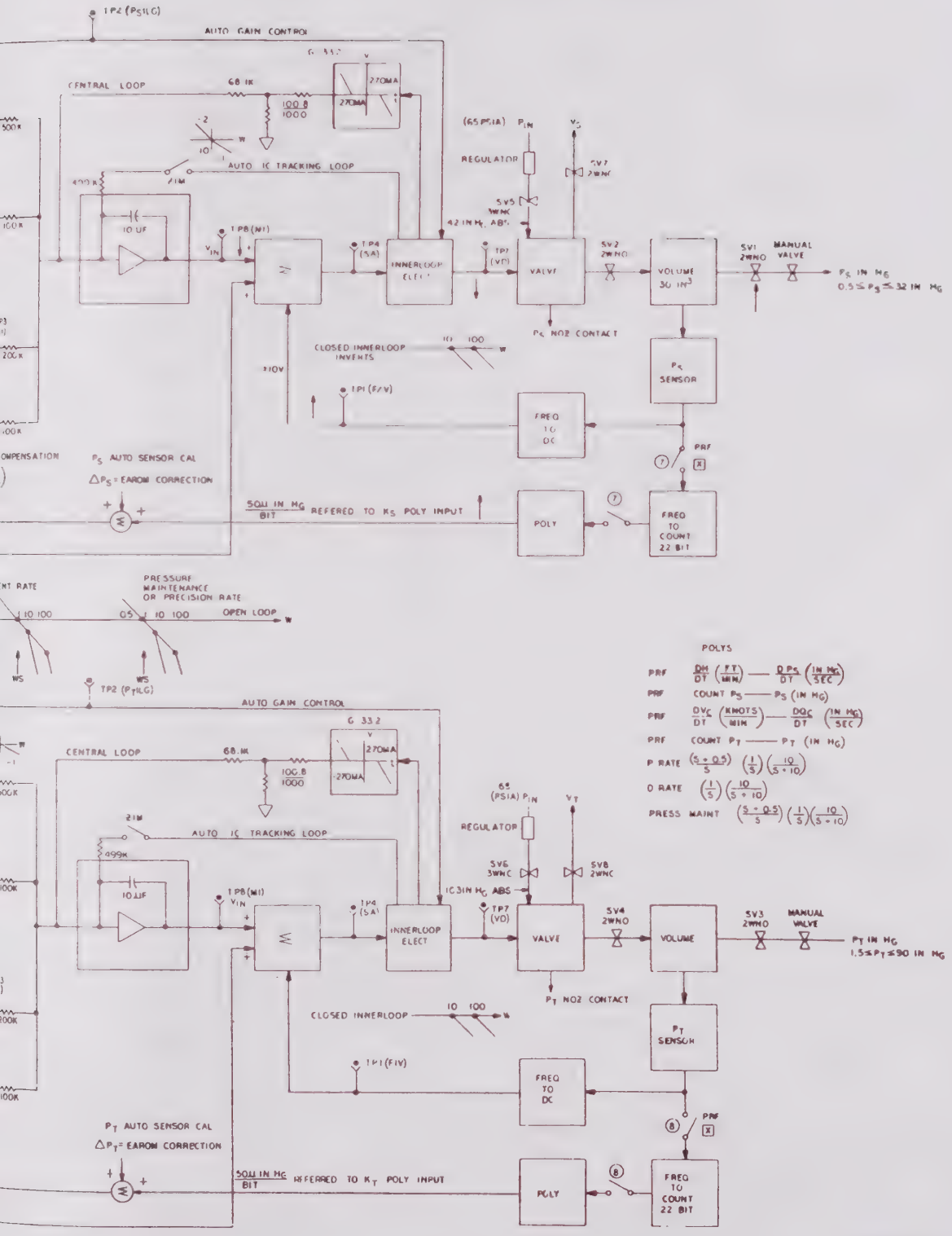

POLYS

PRF $\frac{DH}{DT}\left(\frac{FT}{MIN}\right)$ —— $\frac{DPS}{DT}\left(\frac{IN\ HG}{SEC}\right)$

PRF COUNT PS —— PS (IN HG)

PRF $\frac{DV_C}{DT}\left(\frac{KNOTS}{MIN}\right)$ —— $\frac{DQ_C}{DT}\left(\frac{IN\ HG}{SEC}\right)$

PRF COUNT PT —— PT (IN HG)

P RATE $\left(\frac{S+0.5}{S}\right)\left(\frac{1}{S}\right)\left(\frac{10}{S+10}\right)$

D RATE $\left(\frac{1}{S}\right)\left(\frac{10}{S+10}\right)$

PRESS MAINT $\left(\frac{S+0.5}{S}\right)\left(\frac{1}{S}\right)\left(\frac{10}{S+10}\right)$

E4050554-1B

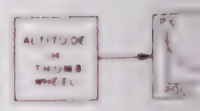

H/V_C Control Mode for P_S Saturation
Figure 4-15

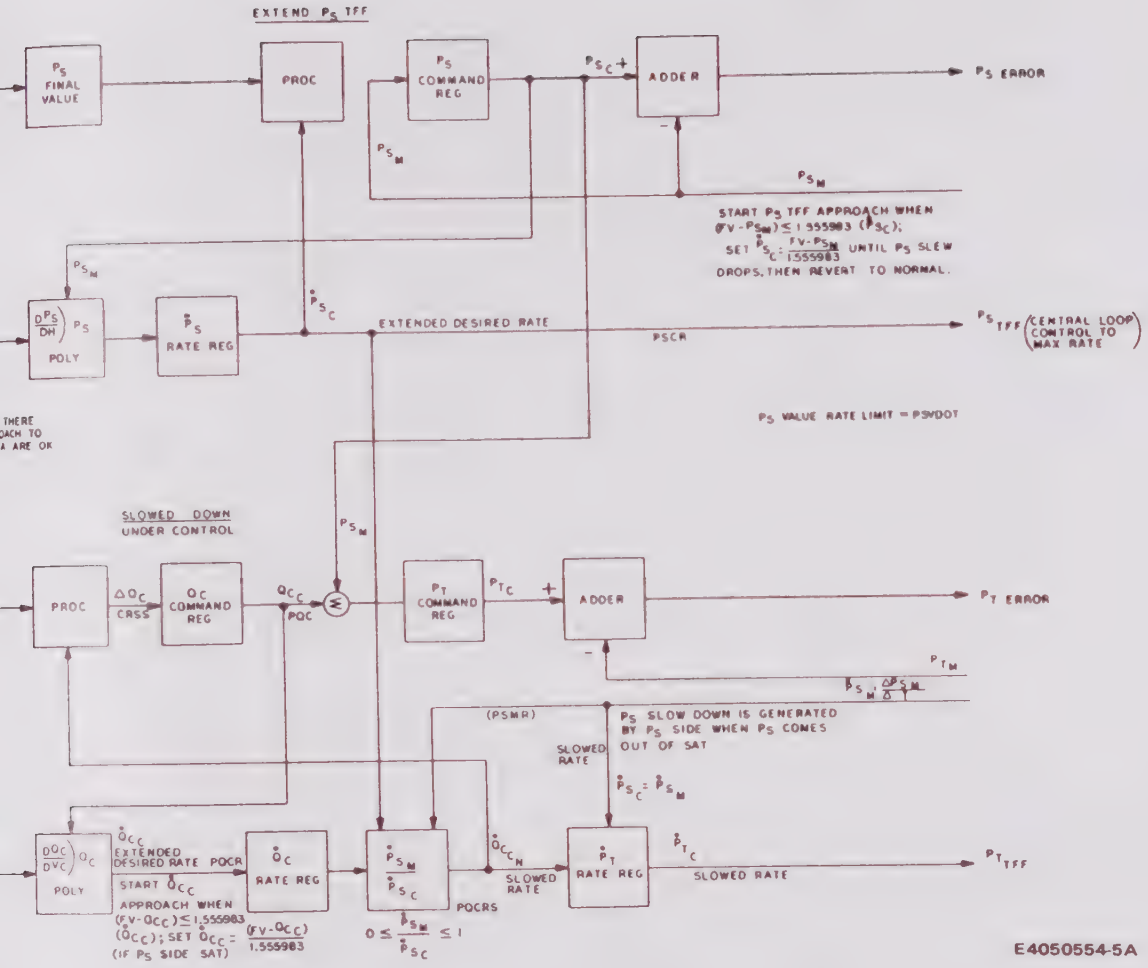
EXTEND P_S TFF
P_S FINAL VALUE
PROC
P_S COMMAND REG
P_{S_C} +
ADDER
P_S ERROR
P_{S_M}
P_{S_M}
START P_S TFF APPROACH WHEN $(P_V - P_{S_M}) \leq 1.555983$ ($\dot{P}_{S_C}$); SET $\dot{P}_{S_C} = \frac{P_V - P_{S_M}}{1.555983}$ UNTIL P_S SLEW DROPS, THEN REVERT TO NORMAL.
P_{S_M}
$\left(\frac{DP_S}{DH}\right) P_S$ POLY
$\dot{P}_S$ RATE REG
$\dot{P}_{S_C}$
EXTENDED DESIRED RATE
PSCR
$P_{S_{TFF}}$ (CENTRAL LOOP CONTROL TO MAX RATE)
P_S VALUE RATE LIMIT = PSVDOT
THERE OACH TO A ARE OK
SLOWED DOWN UNDER CONTROL
P_{S_M}
PROC
ΔQ_C CASS
Q_C COMMAND REG
Q_{C_C}
PQC
P_T COMMAND REG
P_{T_C}
+
ADDER
P_T ERROR
P_{T_M}
$\dot{P}_{S_M} \frac{\Delta P_{S_M}}{\Delta}$
(PSMR)
P_S SLOW DOWN IS GENERATED BY P_S SIDE WHEN P_S COMES OUT OF SAT
SLOWED RATE
$\dot{P}_{S_C} = \dot{P}_{S_M}$
$\left(\frac{DQ_C}{DV_C}\right) Q_C$ POLY
$\dot{Q}_{C_C}$ EXTENDED DESIRED RATE PQCR
START $\dot{Q}_{C_C}$ APPROACH WHEN $(F_V - Q_{C_C}) \leq 1.555983$ ($\dot{Q}_{C_C}$); SET $\dot{Q}_{C_C} =$ (IF P_S SIDE SAT)
$\dot{Q}_C$ RATE REG
$\frac{(F_V - Q_{C_C})}{1.555983}$
$\frac{\dot{P}_{S_M}}{\dot{P}_{S_C}}$
PQCRS
$0 \leq \frac{\dot{P}_{S_M}}{\dot{P}_{S_C}} \leq 1$
$\dot{Q}_{C_{C_N}}$
SLOWED RATE
$\dot{P}_T$ RATE REG
$\dot{P}_{T_C}$
SLOWED RATE
$P_{T_{TFF}}$
E4050554-5A

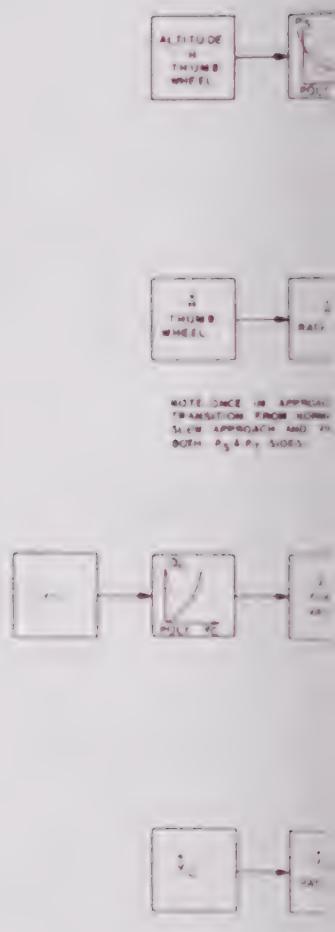

H/V_C Control Mode for P_S Saturation
Figure 4-15

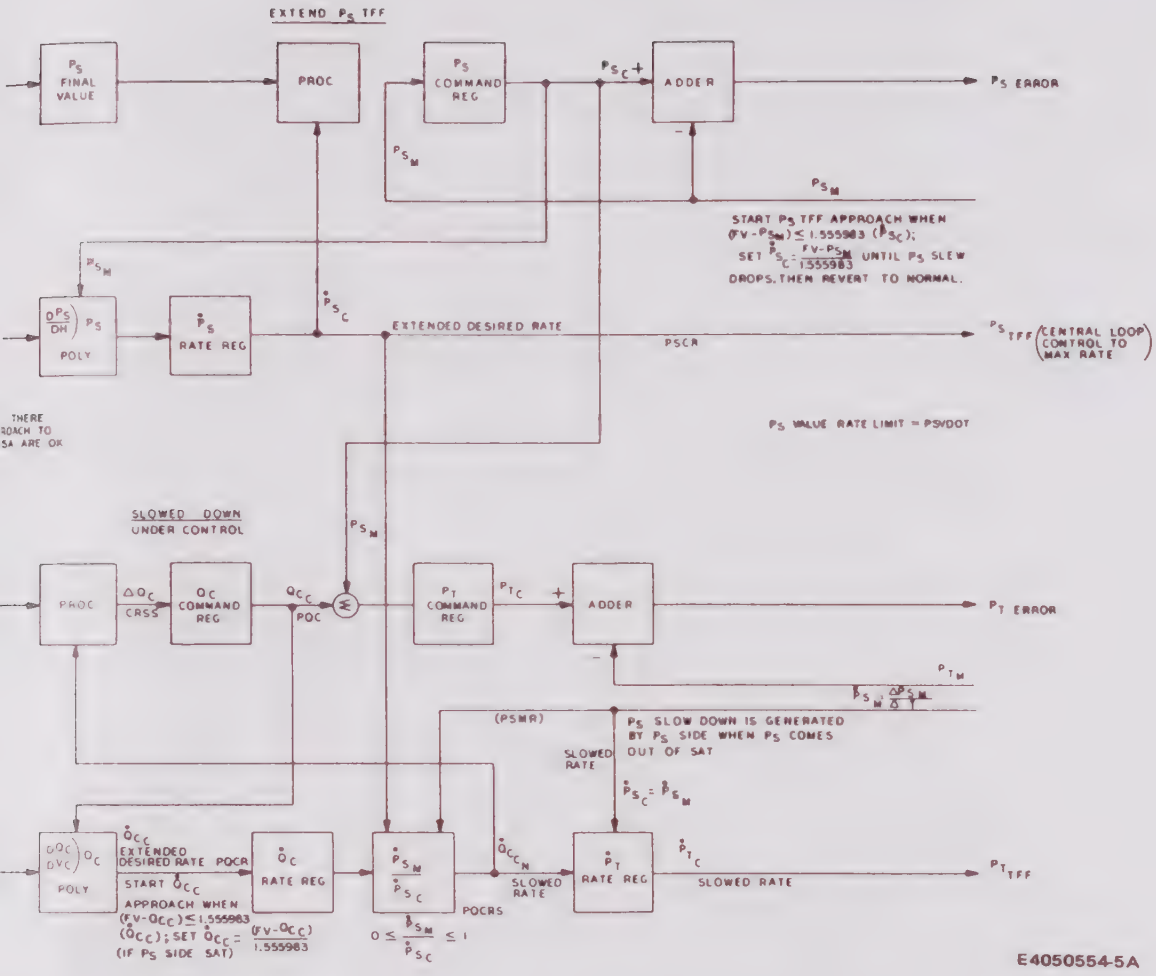
EXTEND P_S TFF
P_S FINAL VALUE
PROC
P_S COMMAND REG
P_{S_C}+
ADDER
P_S ERROR
P_{S_M}
START P_S TFF APPROACH WHEN $(FV-P_{S_M}) \leq 1.555983$ ($\dot{P}_{S_C}$); SET $\dot{P}_{S_C} = \frac{FV-P_{S_M}}{1.555983}$ UNTIL P_S SLEW DROPS, THEN REVERT TO NORMAL.
$\frac{DP_S}{DH}$ P_S POLY
$\dot{P}_S$ RATE REG
$\dot{P}_{S_C}$
EXTENDED DESIRED RATE
PSCR
$P_{S_{TFF}}$ (CENTRAL LOOP CONTROL TO MAX RATE)
P_S VALUE RATE LIMIT = PSVDOT
SLOWED DOWN UNDER CONTROL
PROC
ΔQ_C CRSS
Q_C COMMAND REG
Q_{C_C}
POC
P_T COMMAND REG
P_{T_C}
ADDER
P_T ERROR
P_{T_M}
$\dot{P}_{S_M} = \frac{\Delta P_{S_M}}{\Delta}$
(PSMR)
P_S SLOW DOWN IS GENERATED BY P_S SIDE WHEN P_S COMES OUT OF SAT
SLOWED RATE
$\dot{P}_{S_C} = \dot{P}_{S_M}$
$\frac{DQ_C}{DV_C} Q_C$ POLY
$\dot{Q}_{C_C}$ EXTENDED DESIRED RATE PQCR
START $\dot{Q}_{C_C}$
APPROACH WHEN $(FV-Q_{C_C}) \leq 1.555983$ ($\dot{Q}_{C_C}$); SET $\dot{Q}_{C_C} = \frac{(FV-Q_{C_C})}{1.555983}$ (IF P_S SIDE SAT)
$\dot{Q}_C$ RATE REG
$\frac{\dot{P}_{S_M}}{\dot{P}_{S_C}}$
POCRS
$0 \leq \frac{\dot{P}_{S_M}}{\dot{P}_{S_C}} \leq 1$
$\dot{Q}_{C_{C_N}}$
SLOWED RATE
$\dot{P}_T$ RATE REG
$\dot{P}_{T_C}$
SLOWED RATE
$P_{T_{TFF}}$
E4050554-5A

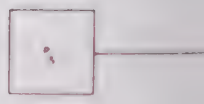

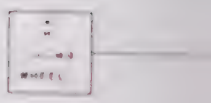

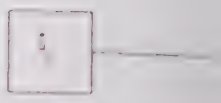

P_s/Q_c Control Mode for P_s Saturation
Figure 4-16

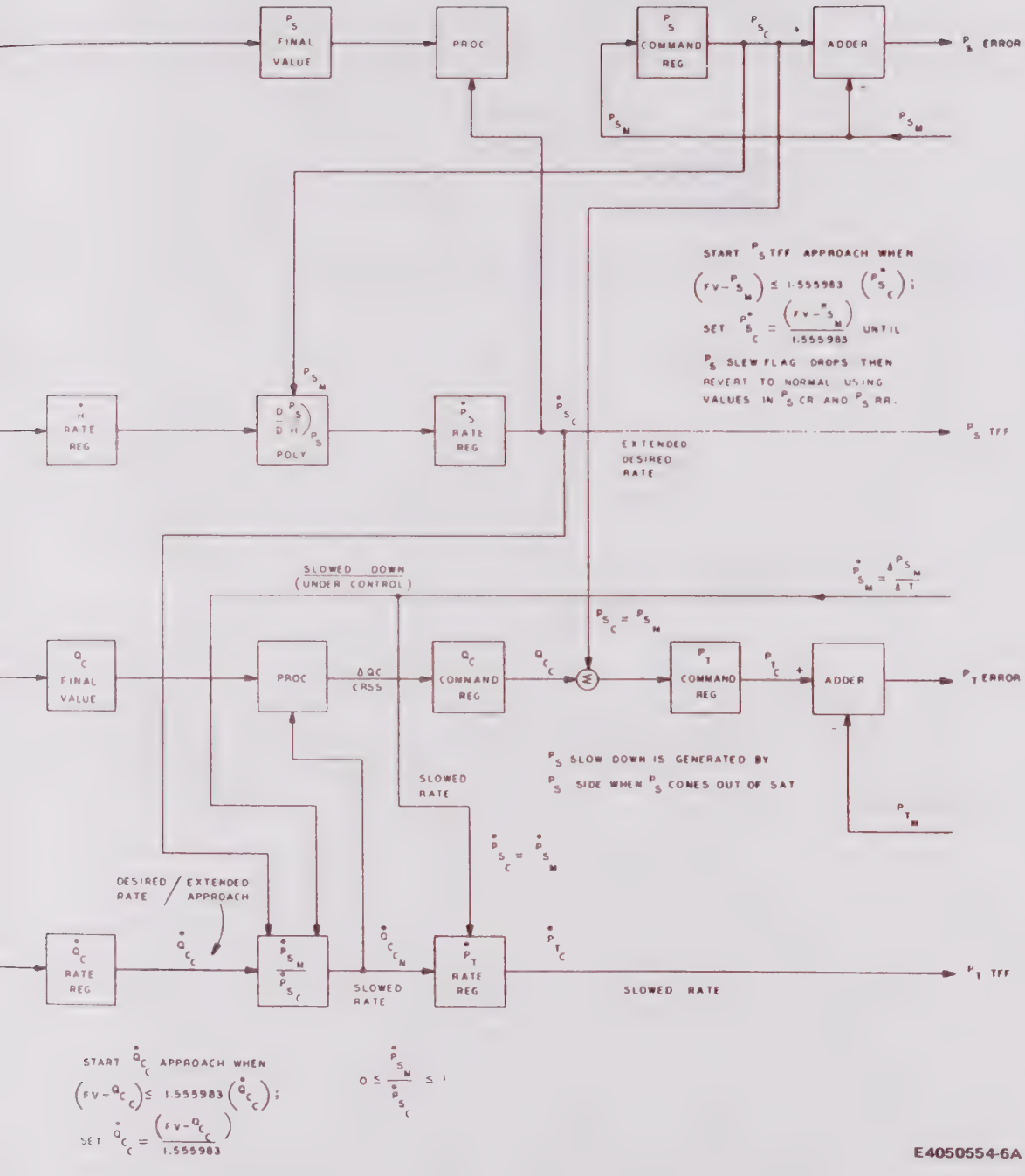
P_S FINAL VALUE
PROC
P_S COMMAND REG
P_{S_C}
+
ADDER
P_S ERROR
P_{S_M}
P_{S_M}
START P_S TFF APPROACH WHEN
$\left(FV-P_{S_M}\right) \leq 1.555983 \left(\dot{P}_{S_C}\right)$;
SET $\dot{P}_{S_C} = \frac{\left(FV-P_{S_M}\right)}{1.555983}$ UNTIL
P_S SLEW FLAG DROPS THEN
REVERT TO NORMAL USING
VALUES IN P_S CR AND P_S RR.
$\dot{H}$ RATE REG
$\frac{D\,P_S}{D\,H}/P_S$ POLY
$\dot{P}_S$ RATE REG
$\dot{P}_{S_C}$
P_S TFF
EXTENDED DESIRED RATE
SLOWED DOWN (UNDER CONTROL)
$\dot{P}_{S_M} = \frac{\Delta P_{S_M}}{\Delta T}$
$P_{S_C} = P_{S_M}$
Q_C FINAL VALUE
PROC
ΔQ_C CRSS
Q_C COMMAND REG
Q_{C_C}
P_T COMMAND REG
P_{T_C}
+
ADDER
P_T ERROR
P_S SLOW DOWN IS GENERATED BY
P_S SIDE WHEN P_S COMES OUT OF SAT
P_{T_M}
SLOWED RATE
$\dot{P}_{S_C} = \dot{P}_{S_M}$
DESIRED RATE / EXTENDED APPROACH
$\dot{Q}_C$ RATE REG
$\dot{Q}_{C_C}$
$\frac{\dot{P}_{S_M}}{\dot{P}_{S_C}}$
$\dot{Q}_{C_{CN}}$
SLOWED RATE
$\dot{P}_T$ RATE REG
$\dot{P}_{T_C}$
SLOWED RATE
P_T TFF
START $\dot{Q}_{C_C}$ APPROACH WHEN
$\left(FV-Q_{C_C}\right) \leq 1.555983 \left(\dot{Q}_{C_C}\right)$;
SET $\dot{Q}_{C_C} = \frac{\left(FV-Q_{C_C}\right)}{1.555983}$
$0 \leq \frac{\dot{P}_{S_M}}{\dot{P}_{S_C}} \leq 1$

E4050554-6A

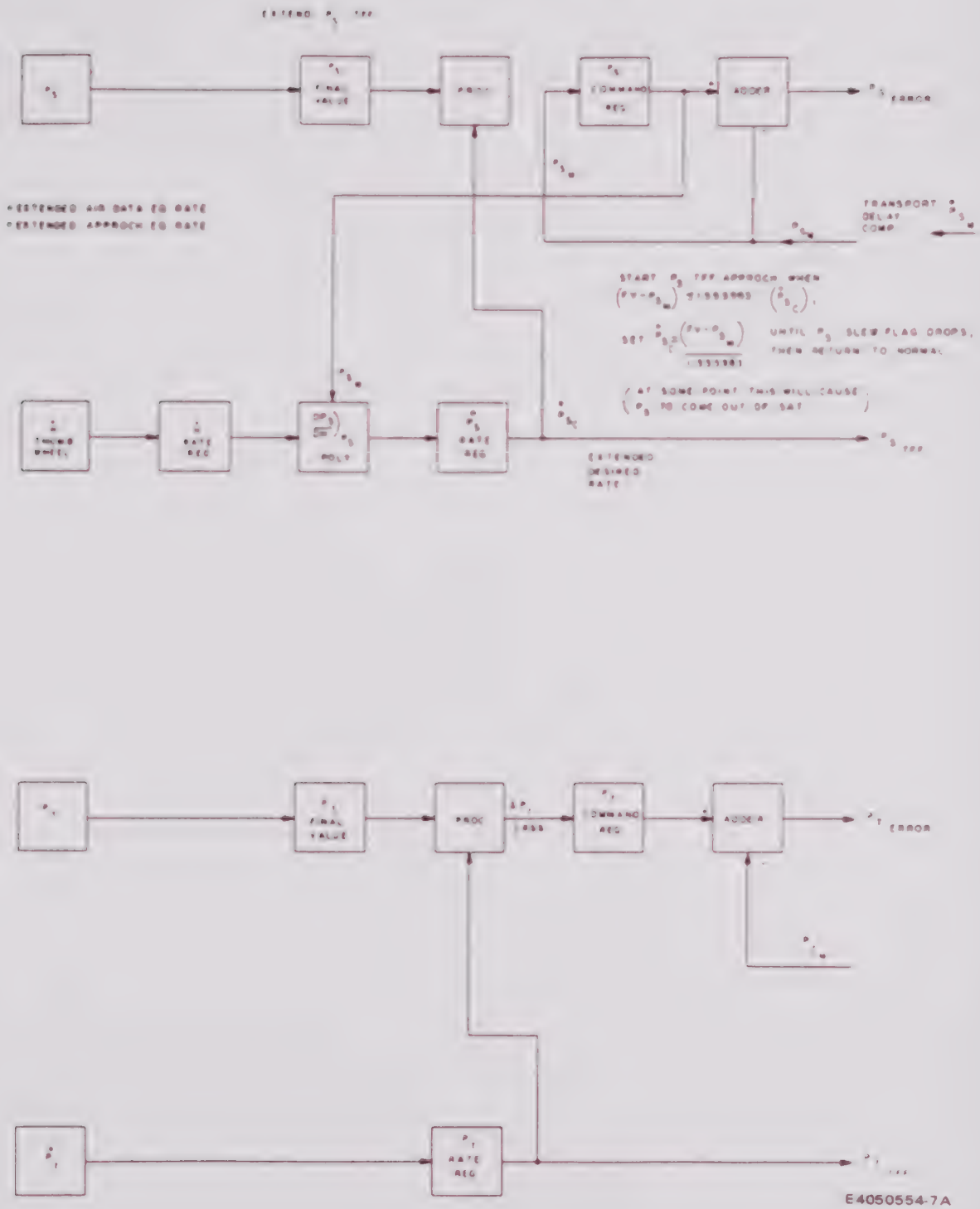

Ps/Pt Control Mode for Ps Saturation
Figure 4-17

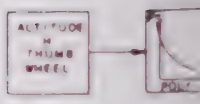

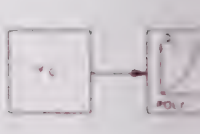

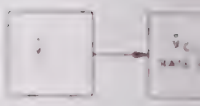

H/V_C Control Mode for Pt Saturation
Figure 4-18

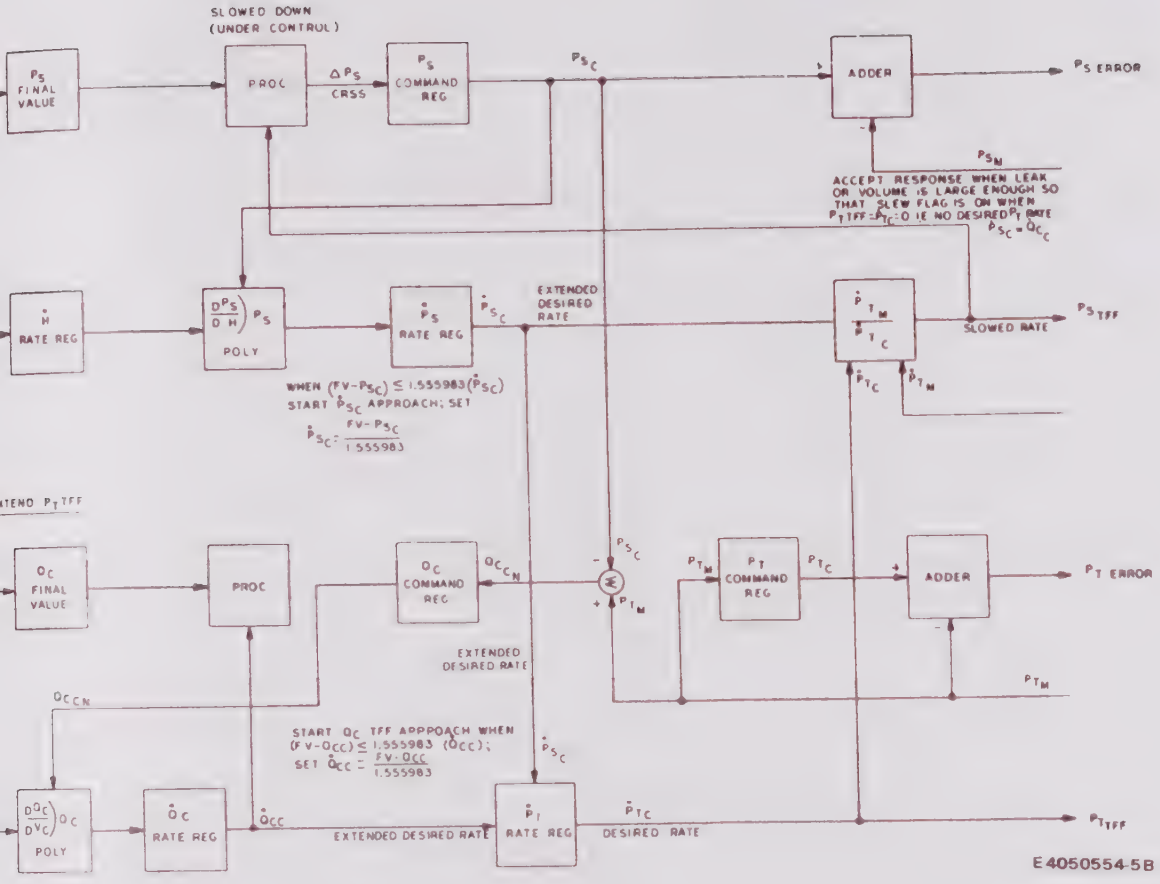
SLOWED DOWN
(UNDER CONTROL)
P_S FINAL VALUE
PROC
ΔP_S CRSS
P_S COMMAND REG
P_{S_C}
ADDER
P_S ERROR
P_{S_M}
ACCEPT RESPONSE WHEN LEAK OR VOLUME IS LARGE ENOUGH SO THAT SLEW FLAG IS ON WHEN $P_{T_{TFF}} - P_{T_C} \neq 0$ IE NO DESIRED P_T RATE
$P_{S_C} = \dot{Q}_{C_C}$
$\dot{H}$ RATE REG
$\left(\frac{DP_S}{DH}\right) P_S$ POLY
$\dot{P}_S$ RATE REG
$\dot{P}_{S_C}$
EXTENDED DESIRED RATE
$\frac{\dot{P}_{T_M}}{\dot{P}_{T_C}}$
$P_{S_{TFF}}$
SLOWED RATE
$\dot{P}_{T_C}$
$\dot{P}_{T_M}$
WHEN $(FV-P_{S_C}) \leq 1.555983(\dot{P}_{S_C})$
START $\dot{P}_{S_C}$ APPROACH; SET
$\dot{P}_{S_C} = \frac{FV-P_{S_C}}{1.555983}$
Q_C FINAL VALUE
PROC
Q_C COMMAND REG
$Q_{C_{CN}}$
P_{S_C}
P_{T_M}
P_T COMMAND REG
P_{T_C}
ADDER
P_T ERROR
EXTENDED DESIRED RATE
P_{T_M}
$Q_{C_{CN}}$
START Q_C TFF APPROACH WHEN
$(FV-Q_{CC}) \leq 1.555983\ (\dot{Q}_{CC})$;
SET $\dot{Q}_{CC} = \frac{FV-Q_{CC}}{1.555983}$
$\dot{P}_{S_C}$
$\left(\frac{DQ_C}{DV_C}\right) Q_C$ POLY
$\dot{Q}_C$ RATE REG
$\dot{Q}_{CC}$
EXTENDED DESIRED RATE
$\dot{P}_T$ RATE REG
$\dot{P}_{T_C}$
DESIRED RATE
$P_{T_{TFF}}$
E4050554-5B

P_s/Q_c Control Mode for Pt Saturation
Figure 4-19

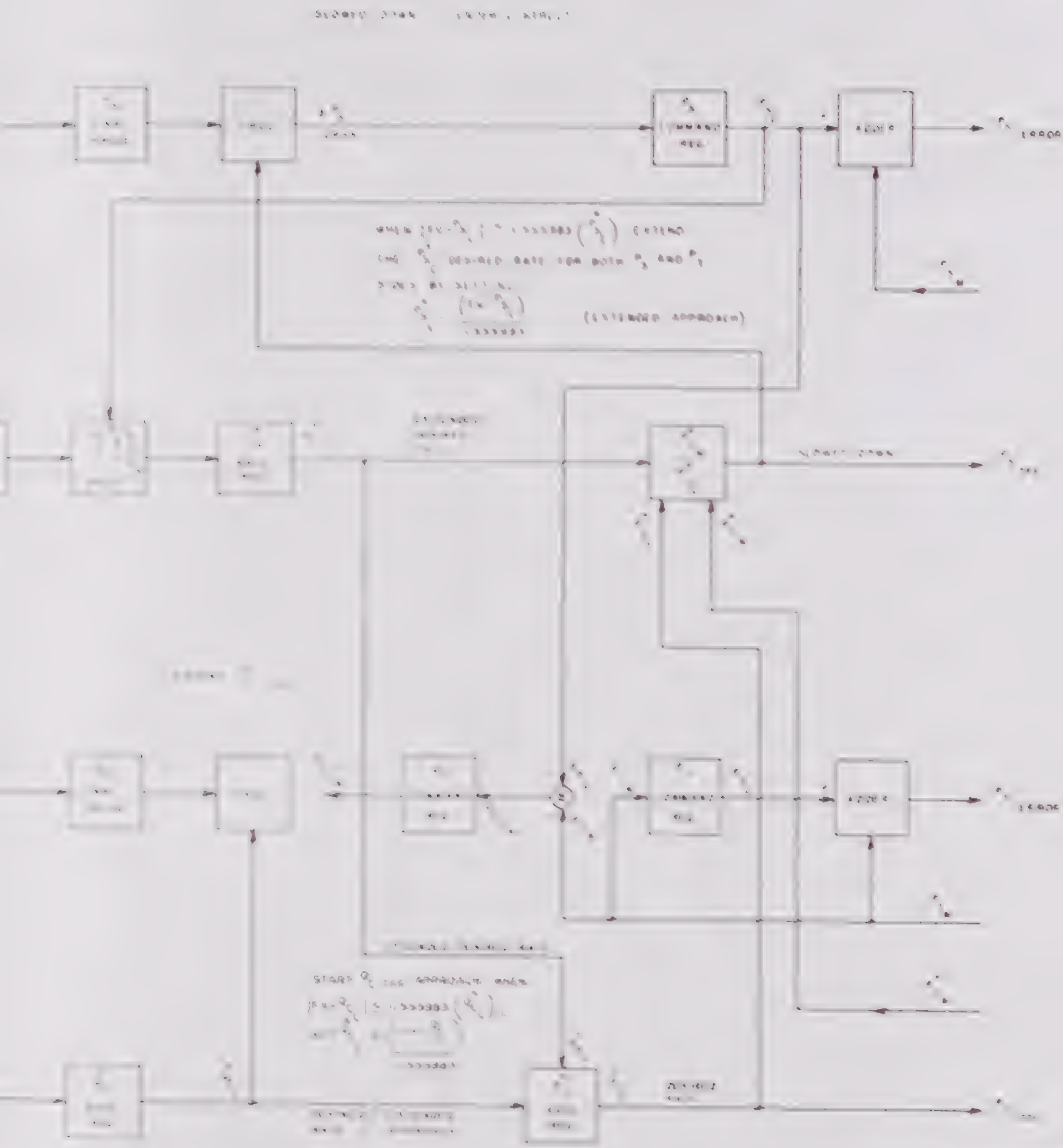

E 4051554-65

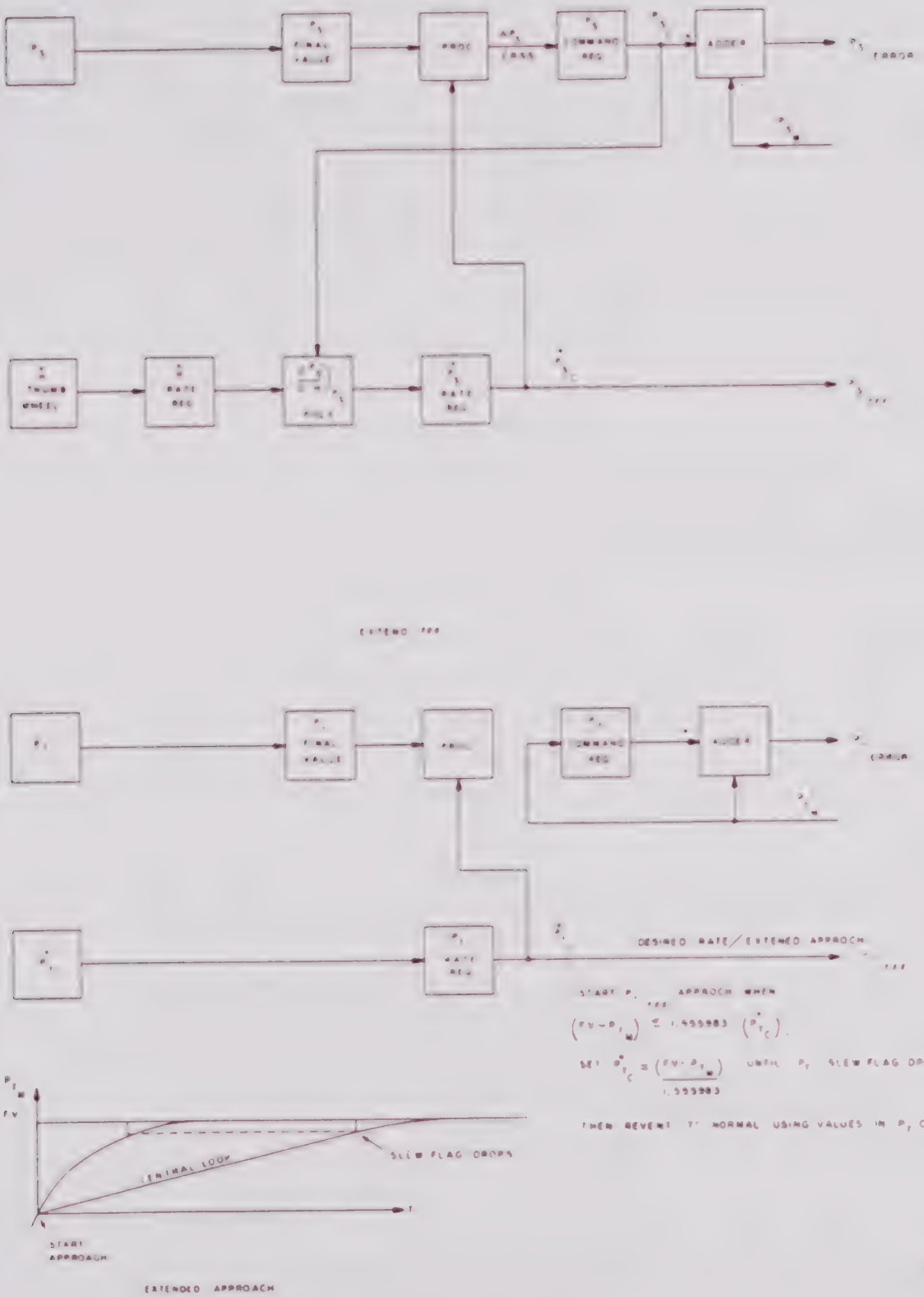

Ps/Pt Control Mode for Pt Saturation
Figure 4-20

2. E. (1) Altitude/Airspeed (H/V_C) Mode

In this combined mode, if the P_S side saturates (figure 4-15), the processor output to the P_S command register is broken and the measured P_S (P_{S_m}) signal is substituted for it. This is necessary because the processor only provides an output for the length of time its calculations indicate it takes to go from one pressure to another at the commanded rate. With the P_S control valve in saturation, there is not enough time to reach the commanded value. The P_{S_m} signal is applied to the P_S command register because it represents where the pressure really is, not where it should be (if the system is not in slew). The commanded P_S pressure now changes only as fast as the saturated channel can accommodate it. This results in a smaller P_S error signal. The P_S commanded rate ($\dot{P}_{S_C}$) is also a function of the measured P_S pressure in slew. It does not change as rapidly as when the system is not in slew. This extends the total feed forward on the P_S side and keeps it saturated until the rate required for a particular pressure is not large enough to saturate the channel, or until the P_S side is close enough to the commanded pressure to begin approach.

The P_t side is slowed down by adding the measured P_S rate ($\dot{P}_{S_m}$) to Qc_{C_n} ($\dot{Q}_{C_C}$ reduced by the ratio of $\dot{P}_{S_m}$ over $\dot{P}_{S_C}$ in the ratio multiplier block), to obtain a slowed-down $\dot{P}_{t_C}$ or $P_{t(TFF)}$. The reduced $\dot{Q}c_{C_n}$ also goes to the processor to slow it down and reduce Q_{C_C}, which adds to the smaller P_{S_C} to produce a smaller P_t error signal.

When the actual value approaches the commanded value, the central loop slowly disengages and the ADT-2228 reverts to normal operation (figure 4-12) and flares in to the final value with no overshoot.

In the case of P_t saturation, similar changes occur in the P_t channel, except the adder receives P_{S_C} and P_{t_m} and outputs Qc_{C_n} to the Q_C command register to obtain an extended $\dot{Q}_{C_C}$.

The P_S side contains the additional ratio multiplier stage that reduces $\dot{P}_{S_C}$ by the ratio of its inputs ($\dot{P}_{t_m}/\dot{P}_{t_C}$) to slow down the processor's P_S output.

(2) P_S/Q_C Mode

The P_S/Q_C mode for both P_S and P_t saturation is identical, except for the parameters and polynomials.

2. E. (3) P_S/P_t Mode

This is not a combined mode; the P_S and P_t channels are independent of each other. Therefore, only the saturated channel needs to develop an extended rate.

Figures 4-21 and 4-22 are plots of two P_S/P_t transitor paths commanded on the ADT-222B. The axes are nonlinear representations of the pressure measured by the sensor at the P_S and P_t internal volumes of the ADT-222B and converted to frequency by the sensors and to voltage by the F/V converter. The transition paths track very closely for the no load volume in black ink and the 738 in^3 load volume in red ink. Pressure drops in the line connecting up an external volume cause a greater divergence of the two transition paths, due to the large mass flows occurring during saturation. When a channel is in auto slew, the two least significant digits in the appropriate readout display AS.

F. Commandable Slew

Commandable slew provides the capability of going from one pressure to another at the fastest rate the unit is capable of producing by driving the control valve(s) wide open. Either channel may be selected or both simultaneously.

Commandable slew is enabled when the unit is in the P_S/P_t mode, both DSSL and DQCL lights are on, and the appropriate most significant RATE COMMAND thumbwheel switch is set to 9.

Commandable slew is activated by depressing the ENTER pushbutton-switch. The two least significant digits of the appropriate readout display CS. In commandable slew, the unit can simulate going from 0 to 90,000 feet in approximately 30 seconds when connected to small external volumes.

G. Automatic Venting

Automatic fixed orifice venting (FOVENT) is a new capability incorporated into the ADT-222B. Whenever power to the ADT-222B is turned on or interrupted or enters the self test mode for any reason, the ADT-222B automatically vents both P_S and P_t sides and the UUT to atmospheric pressure.

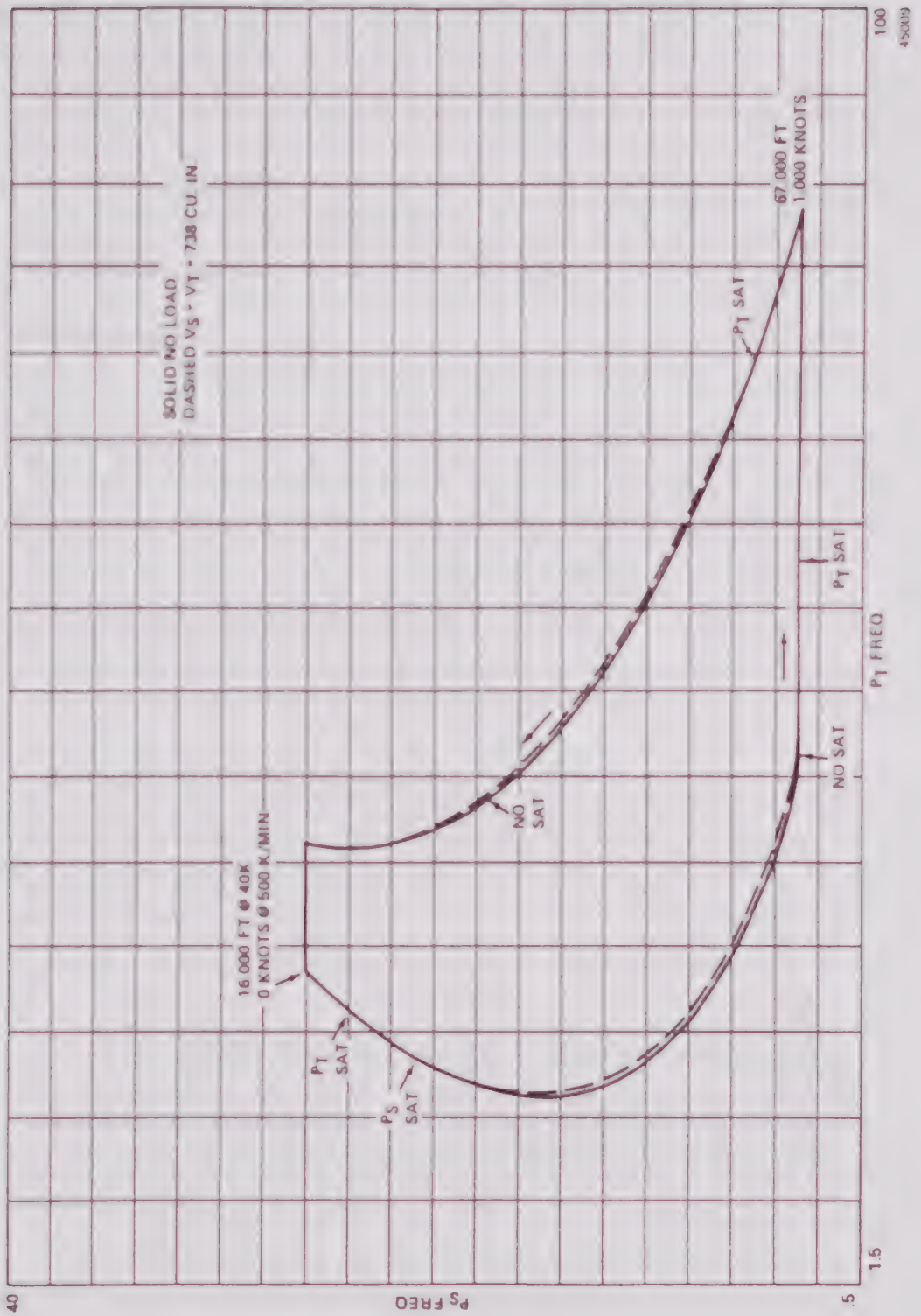

Auto Slew - Example 1
Figure 4-21

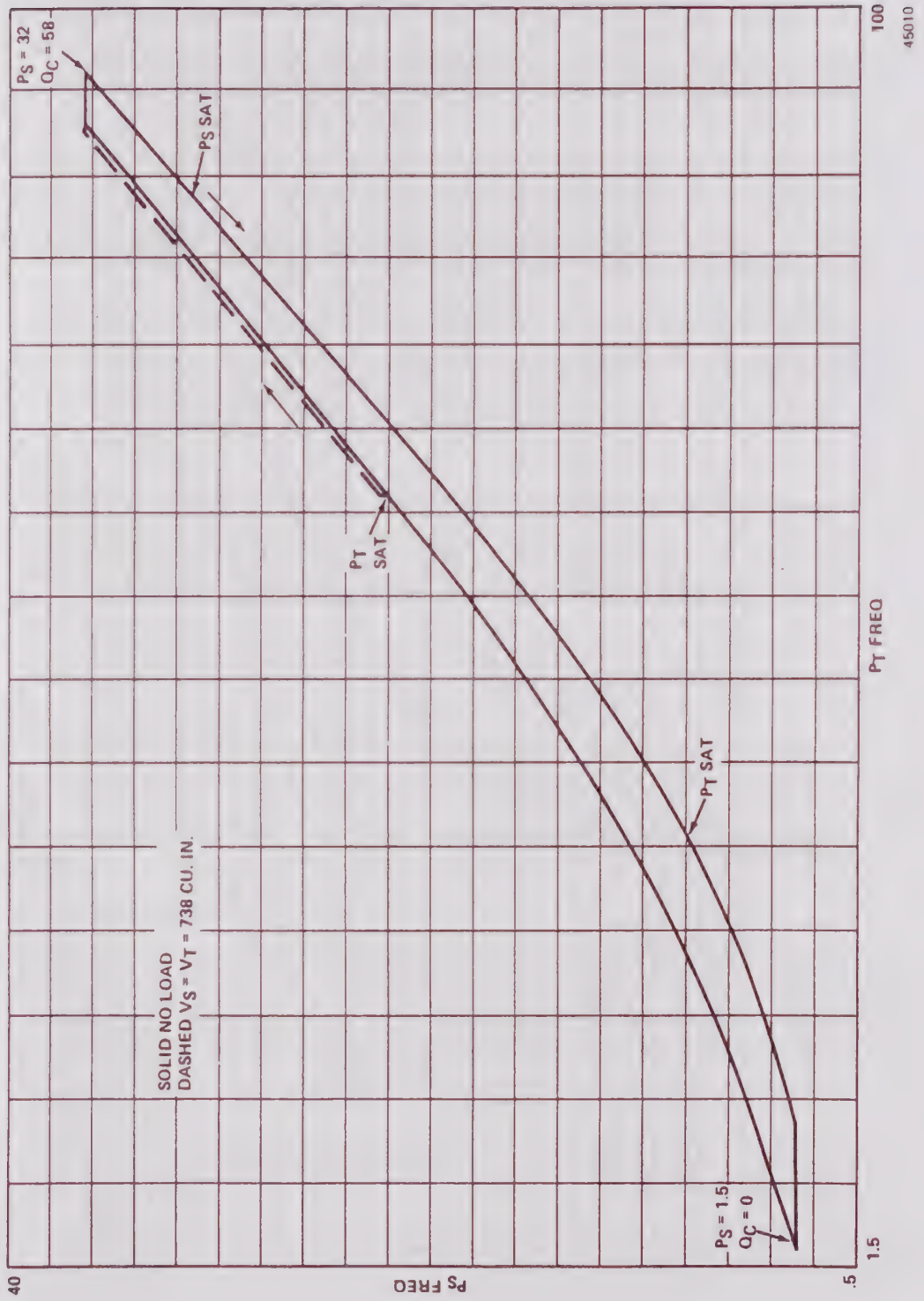

Auto Slew - Example 2
Figure 4-22

Solenoid valves SV1, SV2, SV3, SV4, and SV9 open, and SV7 and SV8 close. The three-way solenoid valves, SV5, and SV6, close off the inlet pressure and open the vent ports. The venting rate is controlled by a fixed orifice in control valves CV1 and CV2. During venting, check valve C prevents the Q_C pressure from becoming more negative than -2 in. Hg.

As stated previously, during venting, altitude rates are dependent on load volume, and may become very small or very large. Airspeed, as well as mach number, may increase by an amount sufficient to exceed the subsonic SSL/QCL flight profile envelope.

3. Detailed Operation

A. Cards A1, A2, A3, and A4

Since it is strongly urged that the user not attempt to troubleshoot and repair the four circuit cards constituting the digital processor, no detailed theory of operation for the four processor cards is included here. The four processor cards are: timing control (A1), program control (A2), arithmetic A (A3), and arithmetic B (A4). The arithmetic cards A3 and A4 are identical and functionally interchangeable. (For information, the block diagram for the processor is shown in figure 4-23, and the I/O block diagram is shown in figure 4-24. Figure 4-25 shows the timing sequences generated by the timing card. The processor instruction formats are shown in figure 4-26, and the operation of the processor instructions is shown in figure 4-27.)

B. Card A5

The control and scratch pad card (figure 4-28) consists of logic to control the solenoid valves, dynamic input logic, and eight 16-bit words of scratch pad that read from the TS2 register and output to the input data bus. (Refer to paragraph E. for an explanation of how the scratch pad functions.)

C. Card A6

The program and sensor memory card (figure 4-29) contains the operational program and sensor memories, the calibration switches used for calibration and used to set the $\dot{H}$ limits, and some miscellaneous logic. The operational program memory consists of 14,336 16-bit words that are addressed by the S-register of the processor. The PROM outputs are connected to the input data bus of the processor. The sensor memory consists of 512 16-bit words in PROM.

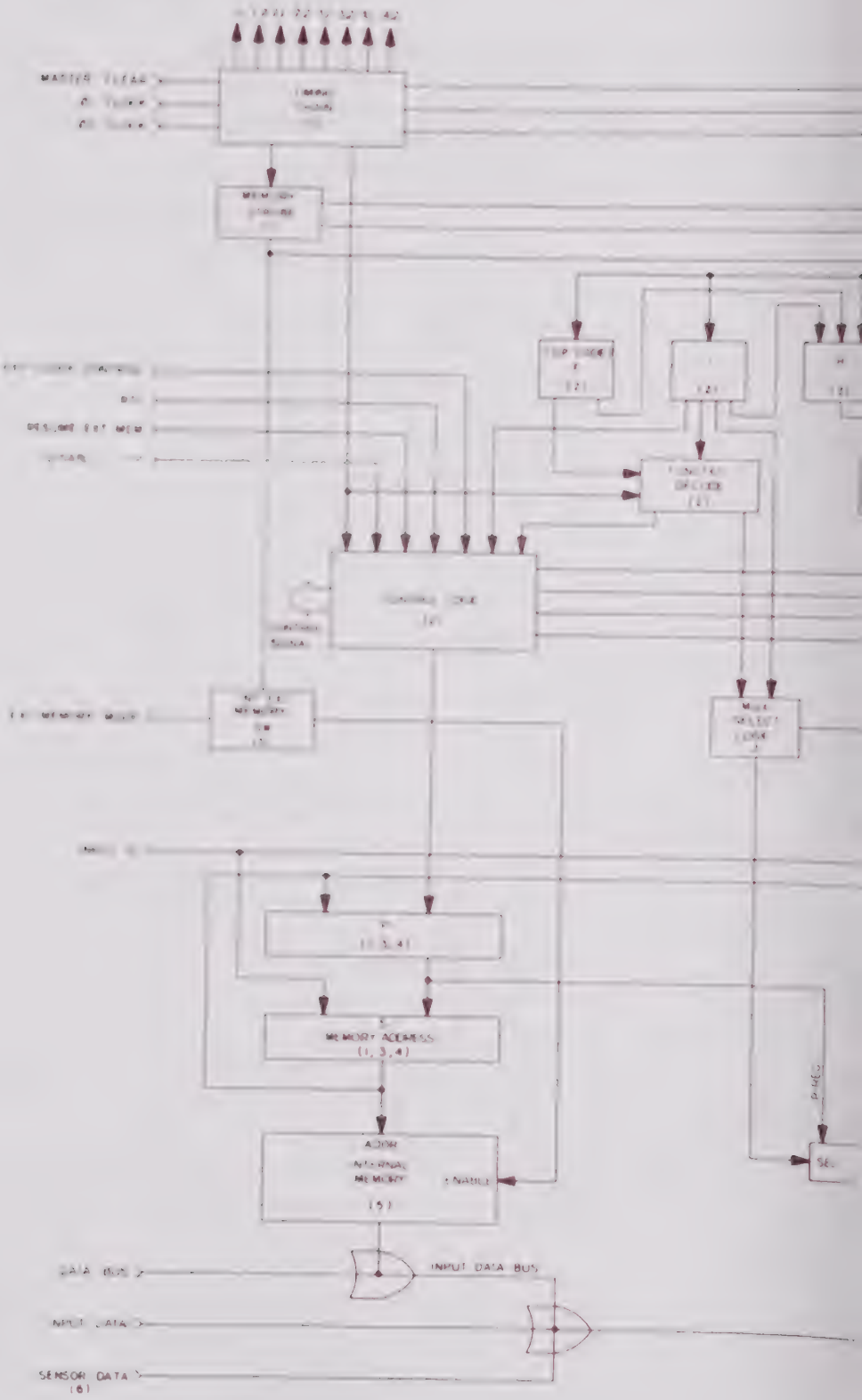

Digital Processor Block Diagram
Figure 4-23

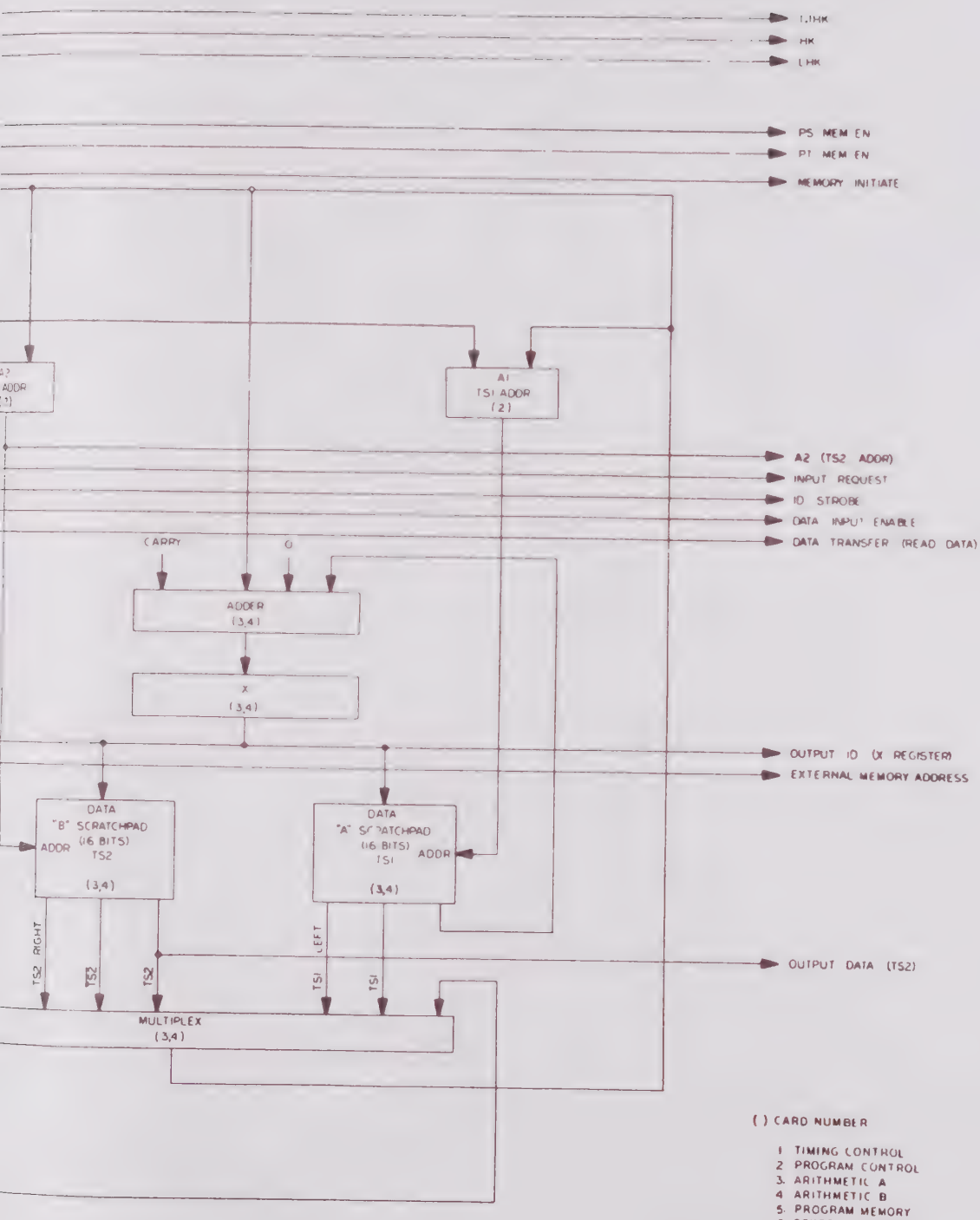

( ) CARD NUMBER

1. TIMING CONTROL
2. PROGRAM CONTROL
3. ARITHMETIC A
4. ARITHMETIC B
5. PROGRAM MEMORY
6. SENSOR CAL DATA
8. EXTERNAL SCRATCH PAD (HANDLED AS I/O DEVICE)

E4025609-1

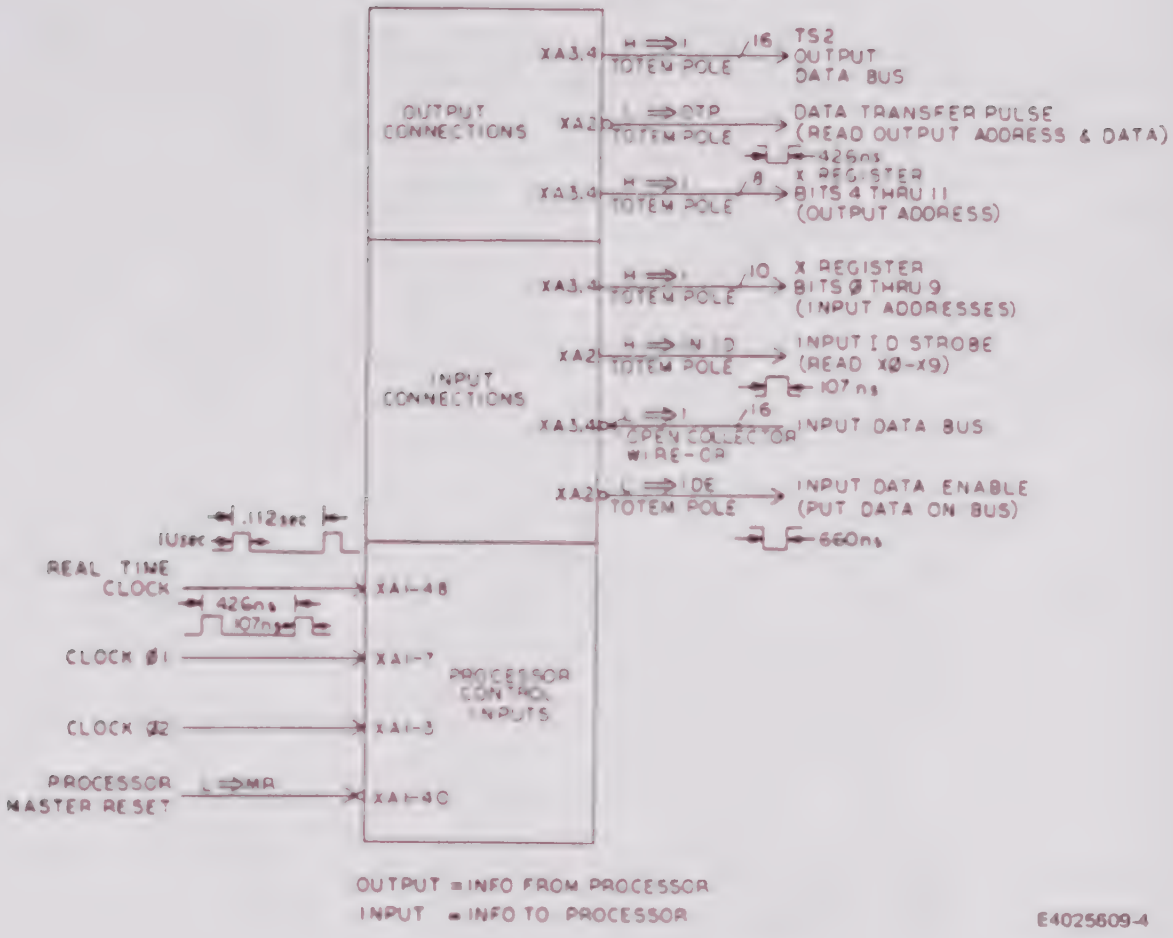

Processor I/O Block Diagram
Figure 4-24

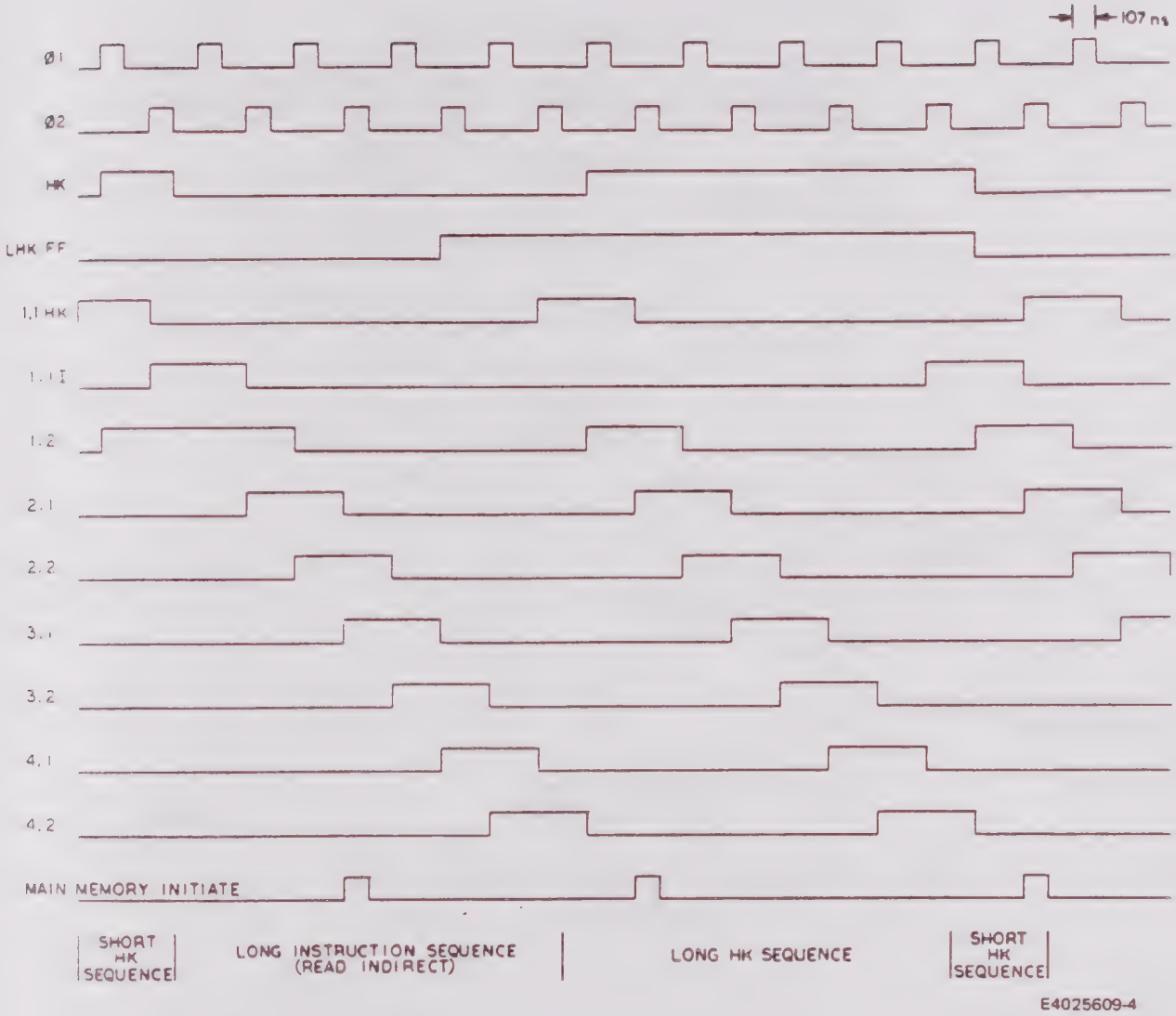

Clock Phase Relationships
Figure 4-25

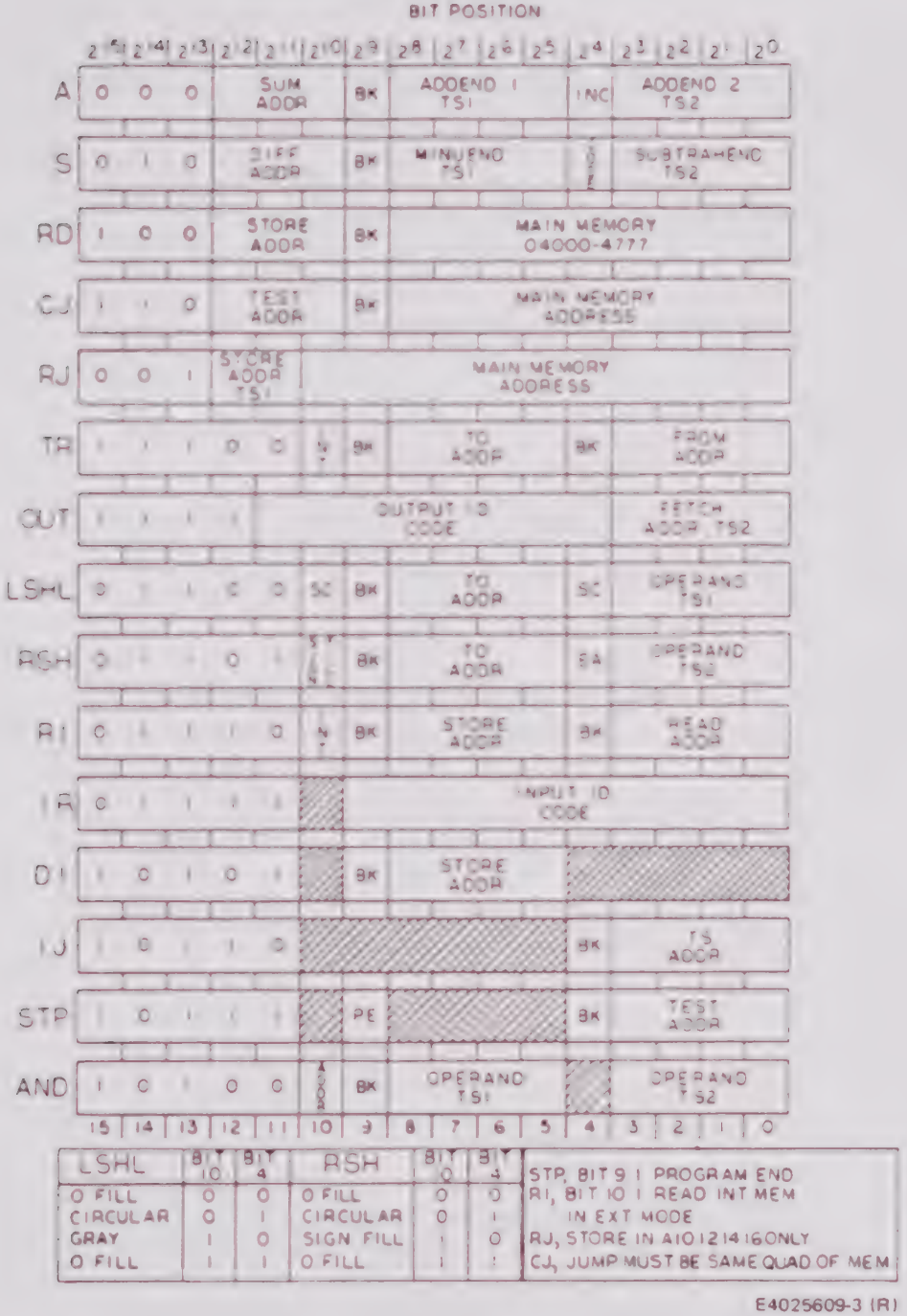

Processor Instruction Formats
Figure 4-26

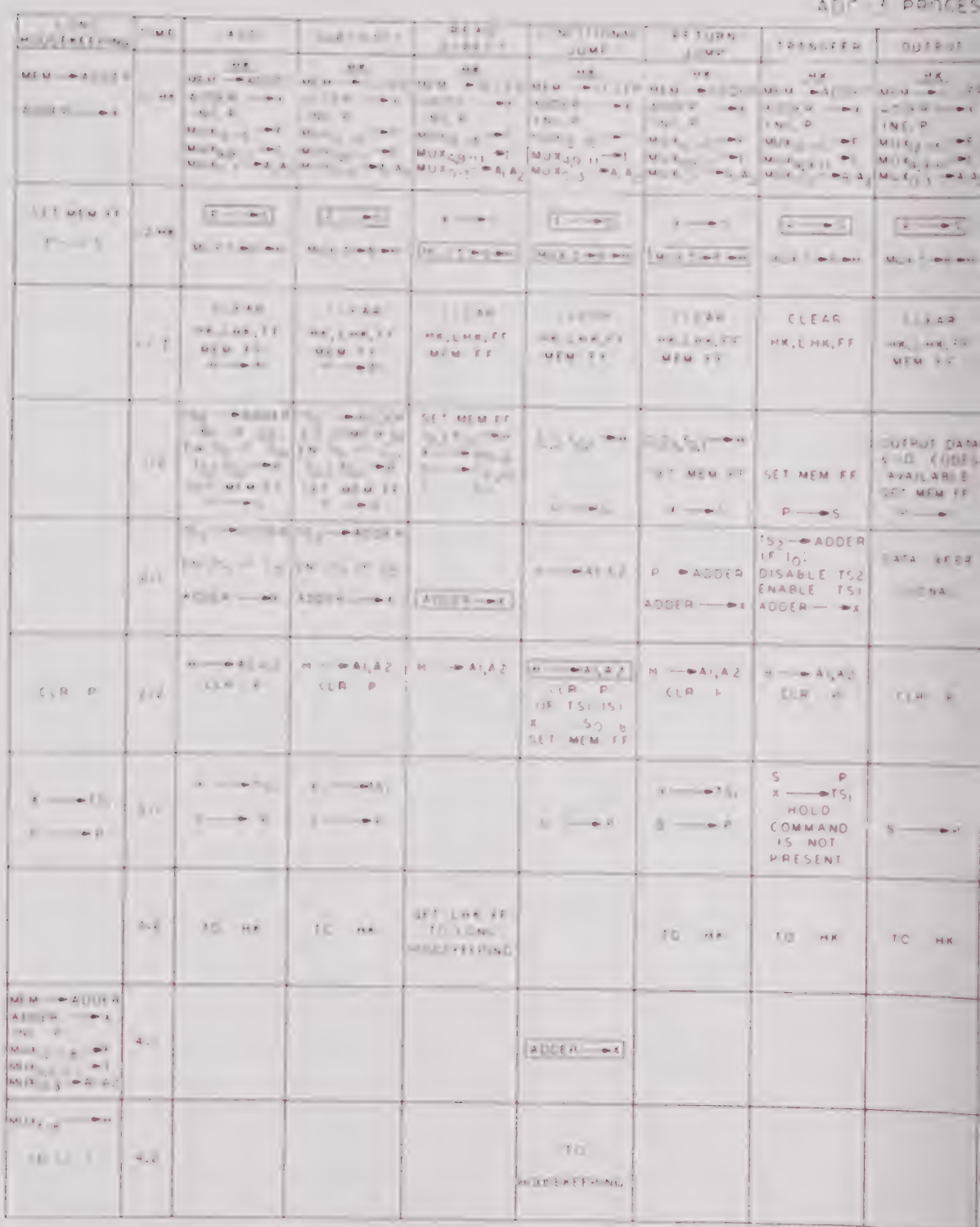

Processor Instruction Operation
Figure 4-27

OR INSTRUCTION OPERATION

LEFT SHIFT	RIGHT SHIFT	READ INDIRECT	INPUT REQUEST	DATA INPUT	INDIRECT JUMP	STOP	AND	TIME	REMARKS
HK EM→ADDER DDER→X NC. P. UX_{12-15}→F $UX_{4,9\ 11}$→I UX_{0-3}→A_1A_2	HK MEM →ADDER ADDER →X INC. P. MUX_{12-15}→F $MUX_{4,9\ 11}$→I MUX_{0-3}→A_1A_2	HK MEM →ADDER ADDER →X INC. P. MUX_{12-15}→F $MUX_{4,9\ 11}$→I MUX_{0-3}→A_1A_2	HK MEM →ADDER ADDER →X INC. P. MUX_{12-15}→F $MUX_{4,9\ 11}$→I MUX_{0-3}→A_1A_2	HK MEM →ADDER ADDER →X INC. P. MUX_{12-15}→F $MUX_{4,9\ 11}$→I MUX_{0-3}→A_1A_2	HK MEM →ADDER ADDER →X INC. P. MUX_{12-15}→F $MUX_{4,9\ 11}$→I MUX_{0-3}→A_1A_2	HK MEM →ADDER ADDER →X INC. P. MUX_{12-15}→F $MUX_{4,9\ 11}$→I MUX_{0-3}→A_1A_2	HK MEM →ADDER ADDER →X INC. P. MUX_{12-15}→F $MUX_{4,9\ 11}$→I MUX_{0-3}→A_1A_2	1.1 HK	COMPUTER SET TO THIS INTERVAL WHEN POWER IS APPLIED OR M.C. SIGNAL IS ENABLED HK FF SET DURING INTERVAL
P→S UX S→B→H	P→S MUX S→B→H	P→S MUX S→B→H	P→S MUX S→B→H	P→S MUX S→B→H	P→S MUX S→B→H	P→S MUX S→B→H	P→S MUX S→B→H	1.2 HK	☐ DON'T CARE THE OPERATION IS PERFORMED BUT THE RESULT IS NOT USED
CLEAR HK, LHK, FF MEM FF	CLEAR HK, LHK, FF MEM FF	CLEAR HK, LHK, FF MEM FF	CLEAR HK, LHK, FF MEM FF	CLEAR HK, LHK, FF MEM FF DATA INSTR	CLEAR HK, LHK, FF MEM FF	CLEAR HK, LHK, FF MEM FF	CLEAR HK, LHK, FF MEM FF H→AI	1.1 I	☆ DATA INSTR TIME LASTS FROM 1.1 I — 42
ET MEM FF P→S	SET MEM FF P→S	P→S	STROBE ID X→ID SET MEM FF P→S	ENABLE INPUT DATA→ ADDER P→S	P→S	SET MEM FF P→S	I_2, I_3, F_0, F_1 TO H P S EN. TS_1, TS_2 TO MUX	1.2	
TS_1 LT_1→ ADDER DDER→X	TS_2 RT_1→ ADDER ADDER→X	TS_2→ADDER I_0 DISABLE TS2 ENABLE TS1 ADDER→X	ADDER→X	DATA→ ADDER ENABLE INPUT DATA ADDER→X	TS_2→ADDER I_0 DISABLE TS_2 EN TS_1 TO ADDER ADDER→X	TS_2→ADDER I_0 DISABLE TS_2 EN TS_1 TO ADDER ADDER→X	TS_1 & ADDER ADDER→X	2.1	
→A1, A2 CLR P	H→A1, A2 CLR P	H→A1, A2 X S SET MEM FF	H→A1, A2 CLR P	SET MEM FF H→A1, A2 CLR P	H→A1, A2 X S CLR P SET MEM FF	H→A1, A2 CLR P TO 31 SEE REMARKS	CLR P H→A1, A2 SET MEM FF	2.2	TIMING CHAIN WILL ADVANCE TO 31 IF: 1 $\underline{I}$; $\underline{RTC}$ OR 2 $\underline{I}$; X_{15} OR 3 I; DIS STOP
X→TS_i S→P	X→TS_i S→P		SEND INPUT DATA REQUEST S→P	X→TS_i S→P	S→P	S→P	X→TS_i	3.1	TS_i = TEMPORARY STORAGE BANK SELECTED BY BIT 9 TS_9 B_9=1 TS_1 B_9=0
TO HK	TO HK	SET LHK FF	TO HK			TO HK		3.2	LHK = LONG HOUSEKEEPING FOR OPEPATION IN EX MEM MODE TIMING CHAIN WILL NOT ADVANCE FROM 3.1 TO 3.2 UNIT EXT. RESUME
		ADDER→X			ADDER→X			4.1	
		TO LONG HOUSEKEEPING		TO HK	TO HK		TO HK	4.2	

E4025609-2

3
6
1

Control and Scratch Pad Card A5 Block Diagram
Figure 4-28

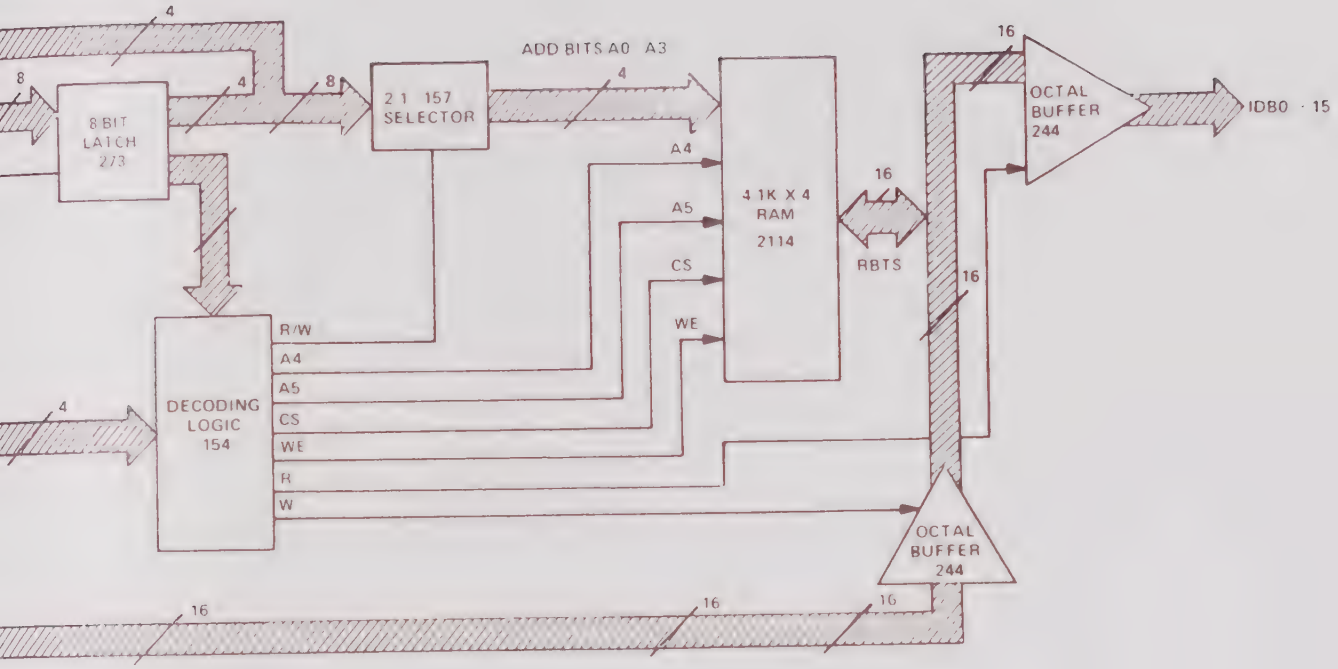

VALID DATA IS ON TS2 OUTPUT DATA BUS, VALID ADDRESS IS ON X REG BITS 4-11

DTP DATA TRANSFER PULSE; T_D = 660 N SEC; T_S = 440 N SEC

110 N SEC INID (INPUT ID STROBE) VALID ADDRESS IS ON X-REG BITS 0-9; LATCH THIS ADDRESS

1.56 MICROSECONDS — 660 NANOSECONDS IDE (INPUT DATA ENABLE); PUT VALID DATA ON INPUT DATA BUS DURING IDE

45011

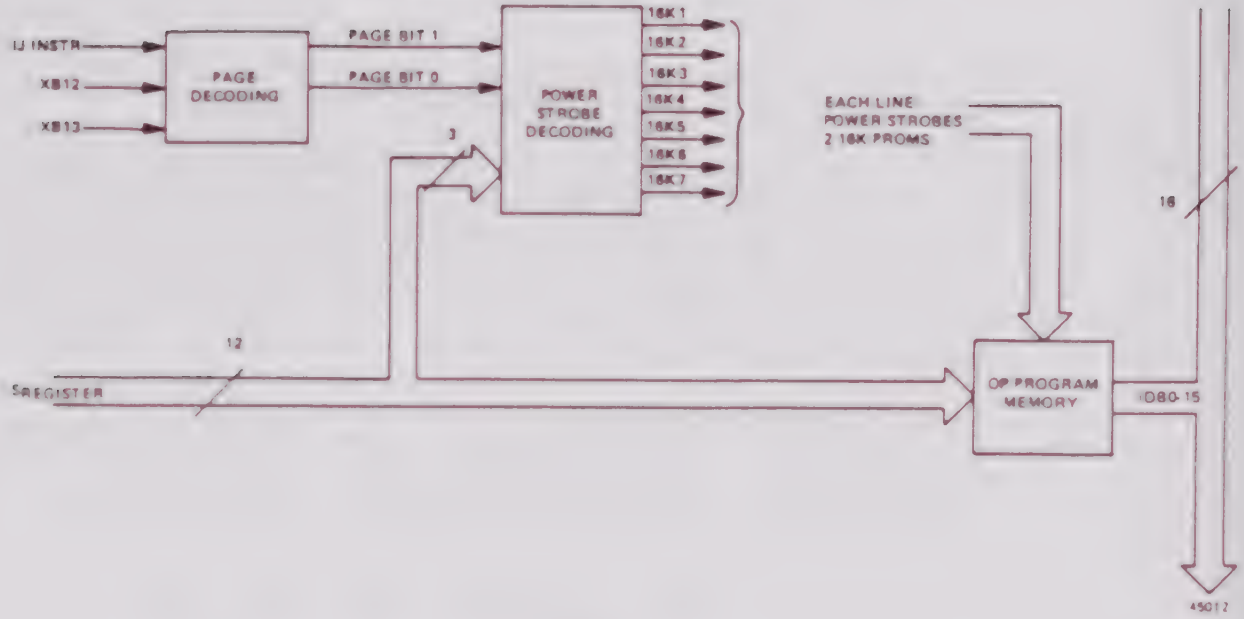

Program and Sensor Memory Card A6 Block Diagram
Figure 4-29

3. D. Card A7

The functional blocks contained on the control, D/A, and CAD card are shown in figure 4-30. This card actually performs three separate functions. The system control function is shown in figure 4-30(A). All system control is determined by the digital processor which inserts system control words into its X-register. It then sends a data transfer pulse (DTP) to card A7. When card A7 receives the DTP, it inserts the X-register contents into the system control registers. The contents of these registers are then decoded by the central address decoding logic (CADL) network. The CADL output constitutes the system control lines to the other components of the ADT-222B. Card A7 also contains the driving logic for the six solenoid valves for the different modes of operation. It uses the input from the P_S DYNAMIC/P_t DYNAMIC switch on the front panel and the CADL output to enable either the P_S or P_t inner loop to be driven by the dynamic input. (The dynamic input enable signal is supplied by the CADL output.) The mode status network also decodes the processor OK (POK) word from the CADL for use by the BIT circuitry.

The D/A converter function is shown in figure 4-30(B). When the D/A latch (DAL) pulse is received, the contents of the output data bus (TS2) are fed into the data register. The contents of the data register are then converted to its equivalent analog voltages by the 12-bit D/A converter. The analog output is fed to the P_S and P_t inner loop cards for storage in the appropriate sample and hold circuit.

The BIT function, shown in figure 4-30(C), monitors the power supply output to detect power interruptions. If a power interruption of greater than 10 milliseconds occurs in the +5 volts dc logic supply output from the power supply, the BIT circuit sends a master reset pulse to the processor and to the display panel multiplexer, causing the system to enter the initiated BIT cycle. The same thing happens if a processor OK (POK) signal is not received within 0.32 second after the last POK. The POK signal is a decoded CADL output resulting from the transmission of a processor OK status word from the processor via the X-register. The POK timer is a counter circuit driven by a 400-Hz signal from the power supply. The POK timer is reset to zero by every POK pulse, but if the timer finishes its count before a POK pulse is received, the timer sends a PFAIL signal to the BIT circuit to start initiated BIT. The system does not leave initiated BIT unless the +5 volt dc line is valid and a POK signal is received.

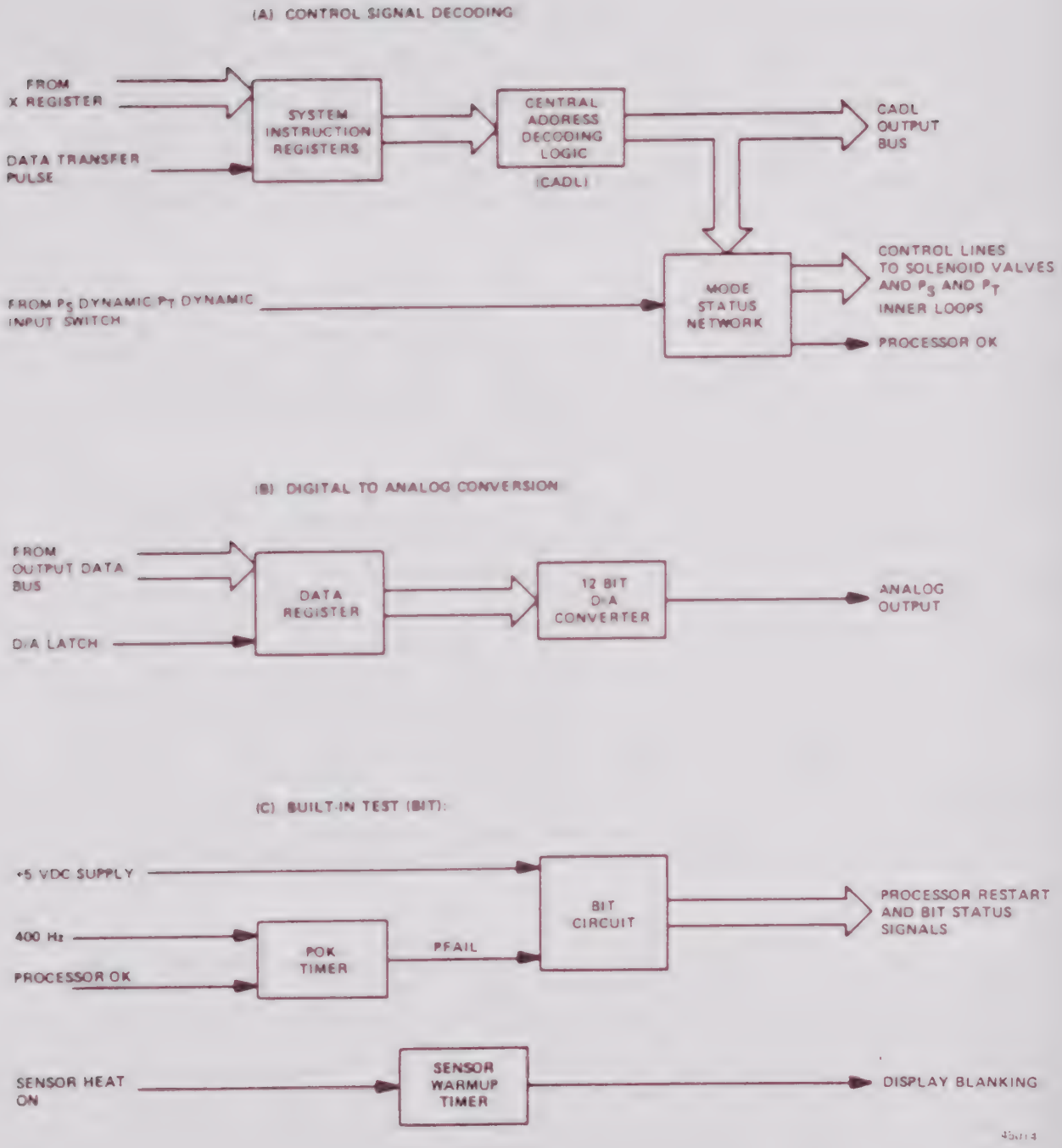

Control, D/A, and CAD Card A7 Block Diagram
Figure 4-30

The remaining circuit on card A7 is the sensor warmup timer. It serves the pseudo-BIT function of transmitting a CCC signal to the display panel to blank the P_s and P_t displays until sufficient time has elapsed for the sensors to heat up and stabilize. This circuit charges a 150-microfarad capacitor through an FET network to generate the time delay for sensor warmup. This configuration provides the timer with the additional capability of being able to remember the total time the sensor heat has been turned off. When the sensor heat is turned off, the discharge path from the capacitor is through the FET, which results in an extremely slow discharge rate.

3. E. Card A8

The block diagram for the scratch pad calibration memory card is shown in figure 4-31. Unlike the scratch pad memory contained in the arithmetic A and B cards of the processor, the memory contained on this card is not directly accessible through the processor's memory address registers. This scratch pad memory is accessed as an I/O device.

The X-register is used as the address register for the A8 scratch pad words. When the scratch pad input ID signal is present, the contents of the X-register are decoded by the address decoder and stored in the address register. If a word is to be output from the processor, the processor sends a data transfer pulse (DTP), and the contents of the TS2 bus from the processor are clocked into the random access memory (RAM) in the location whose address is stored in the address register. For an input operation, the IDE clocks the contents of the addressed RAM location onto the input data bus via the data bus drivers. Auto sensor calibration memory is also located on card A8. It contains 64 16-bit, nonvolatile words used to store fine sensor calibration data. The processor writes to the EAROM the same way as to scratch pad, but the timing is different, and necessitates additional timing circuits. In addition to the scratch pad and auto sensor calibration memory, card A8 also contains some dynamic input and nozzle contact detecting circuitry.

3. F. Card A9

The clock and F/C card (figure 4-32) is another multipurpose card. The clock function is shown in figure 4-32(A). The output of a free running 37.5-MHz oscillator is fed into a clock phase encoder to generate the basic timing signals for the system. The timing control card (A1) uses Ø1 and Ø2 to generate the basic clock phases for the digital processor. RTC (real time clock) is used by the program control card (A2) to control operation of the digital processor program. LOX is fed into the front panel multiplexer to control the flashing frequency of the DQCL, DSSL, and precision rate pushbuttons.

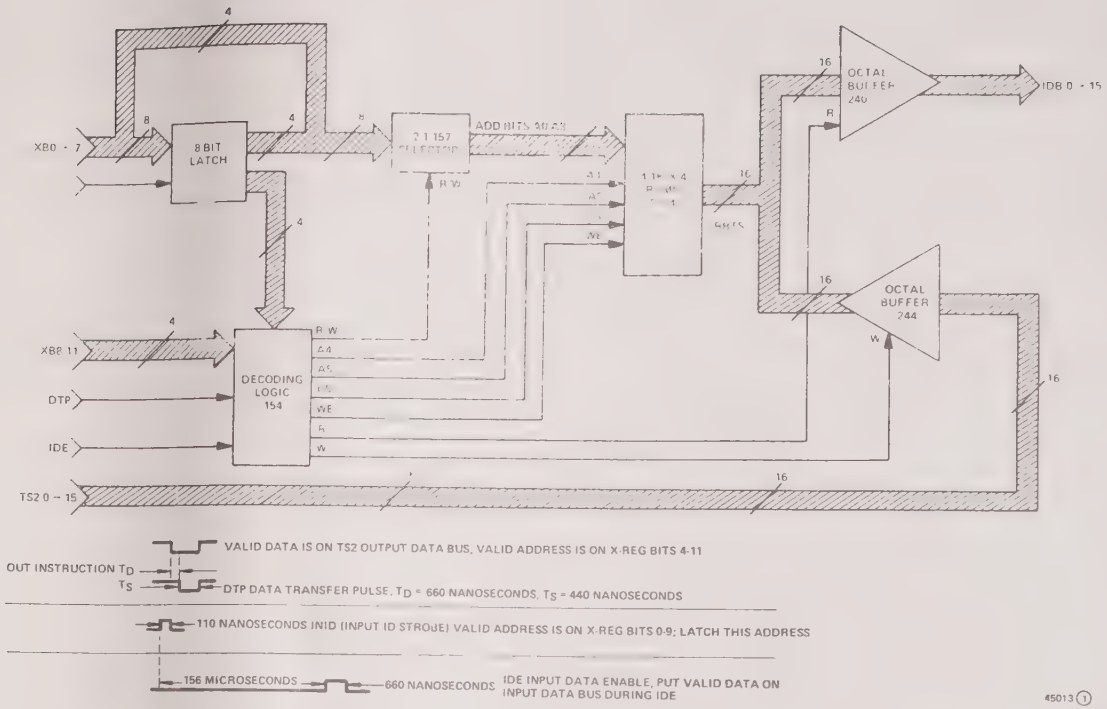

Scratch Pad/Calibration Memory Card A8 Block Diagram
Figure 4-31 (Sheet 1 of 2)

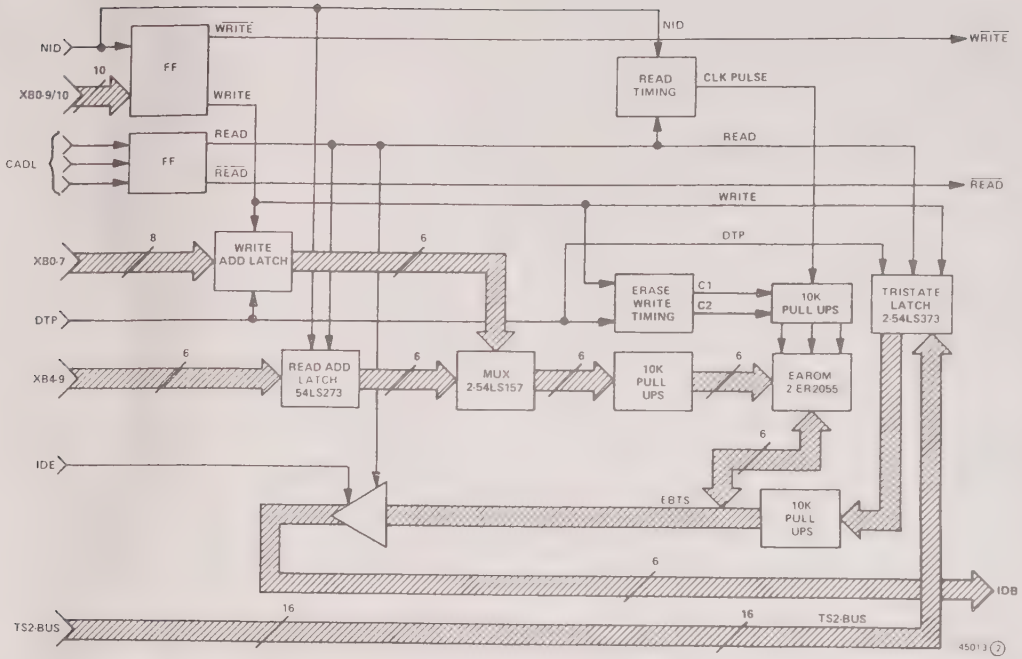

Scratch Pad/Calibration Memory Card A8 Block Diagram
Figure 4-31 (Sheet 2)

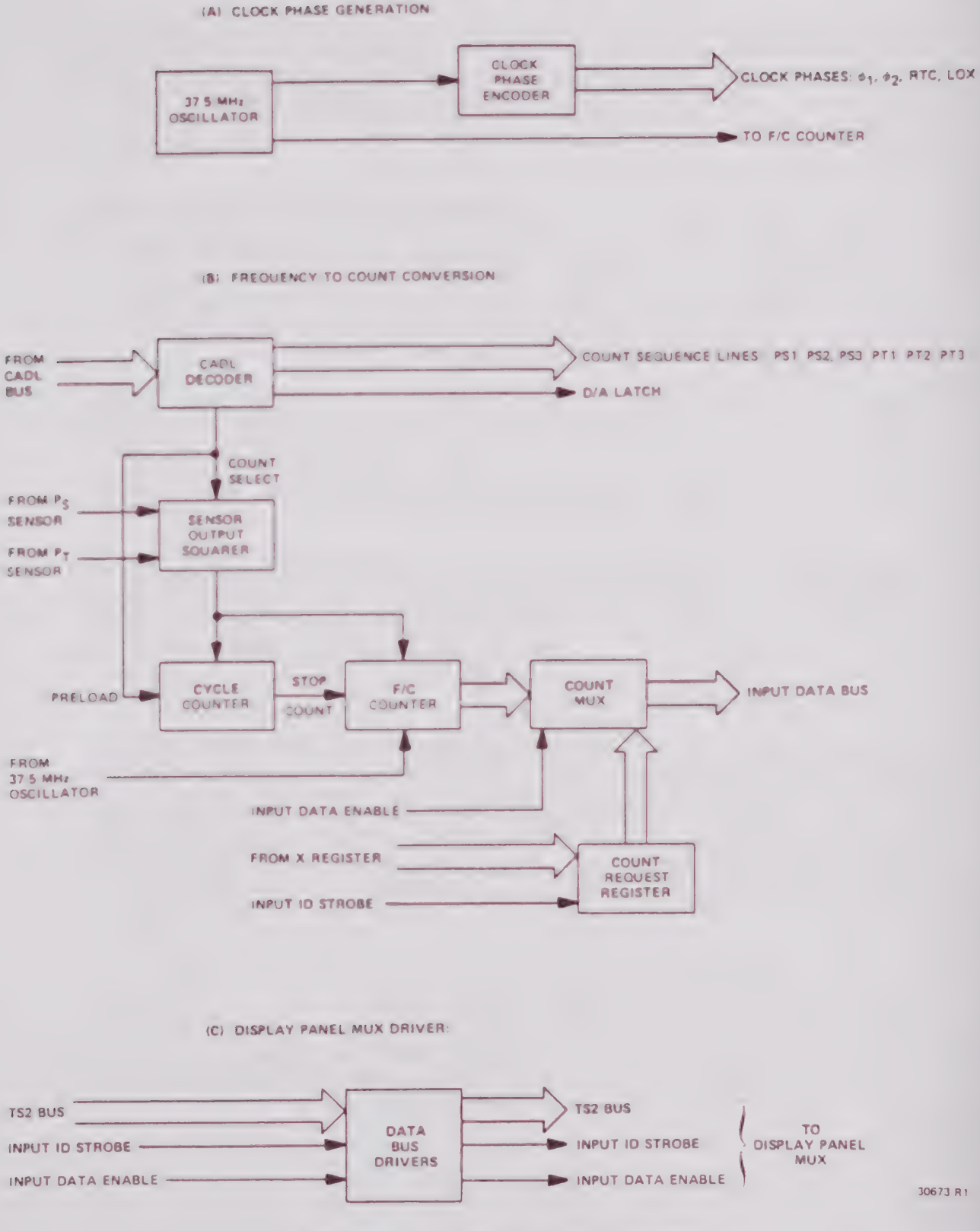

Clock and F/C Card A9 Block Diagram
Figure 4-32

The frequency-to-count function is shown in figure 4-32(B). Four separate frequency-to-count conversions are provided to the processor for both the P_s and P_t outputs. The processor then averages the four counts to minimize the effects of P_s and P_t sensor frequency fluctuations caused by random noise. The processor requests that a count be initiated through a control word in the X-register. The count control word is decoded by card A7 and placed on the CADL bus.

The start count request enters this card from the CADL bus and is further decoded by the CADL decoder, which generates a 1.4-millisecond pulse on the appropriate count sequence line to tell the system which count is being generated. The CADL decoder enables the appropriate (P_s and P_t) count by gating the appropriate sensor output into the sensor output squarer. The squarer amplifies and limits the sensor output to eliminate amplitude fluctuations and minimize noise.

The squared sensor output is gated together with the high speed clock (37.5 MHz) to drive the F/C counter. The count is started by the count select pulse from the CADL, which is actually a pulse on either the PSC (P_s count) or PTC (P_t count) select line to the squarer. The count continues for a specific number of complete sensor output periods that are counted by the cycle counter.

The cycle counter counts to a value of 255. The reset to zero (the 256th count) is used to stop the F/C counter. To obtain the proper number of sensor cycles to be used for the F/C count, the cycle counter is preloaded with 199 for a P_s count by the PSC pulse. This results in the P_s count being performed over 57 cycles (256 thru 199). Similarly, the PTC pulse preloads the cycle counter with 94 which results in a 162-cycle count period.

When the count stops, the F/C counter contains the value of the count. When a count input request word is placed in the X-register and an input ID strobe is received from the processor, the X-register contents are placed in the count request register to select which half of the count value (coarse or fine) is to be transmitted. Then, receipt of an input data enable signal causes the multiplexer to transfer the appropriate value from the F/C counter to the input data bus for use by the processor.

An additional, unrelated function of the CADL decoder on this card is the decoding of the D/A latch (DAL) signal for use by card A7. Figure 4-32(C) shows another unrelated function of this card, data bus drivers to provide buffering for the TS2 bus, input ID strobe, and input data enable signals to be used by the display panel multiplexer. These drivers are situated on this card because of the available space and this card's close proximity to the processor cards.

3. G. Card A10

This card is provided when the ATE option is incorporated. Complete details are contained in chapter 3 of this manual.

H. Card A11

Not installed in this configuration.

I. Cards A12 and A13

The block diagrams for the P_t and P_s inner loop cards are shown in figures 4-33 and 4-34, respectively. Although these cards are not functionally interchangeable, they are quite similar. In addition to the inner loops (inner, auto IC tracking, and central), these cards contain the main integrators and the sample and hold circuits of the outer loops. These cards contain all of the analog circuitry of the inner and outer loops with the exception of the D/A converter.

The majority of these block diagrams were explained previously; the frequency-to-digital (F/D) converter is explained further.

To eliminate the effects of amplitude fluctuations and to minimize noise, the sensor output is fed into a squaring circuit which amplifies the sensor output and limits its amplitude, thus producing a square wave with a stable amplitude and fast rise time. This square wave is then fed into the F/D converter and a pulse generator.

During the positive half cycle of the square wave, a capacitor is rapidly and fully charged. During the negative half cycle, the capacitor is slowly discharged. At the end of the negative half cycle, the pulse generator triggers a sample and hold circuit, which then stores the value of the dc voltage on the capacitor. During the next positive half cycle, the capacitor is recharged again and the process is repeated. The net result of this is that the sample and hold circuit always contains a dc voltage that is directly proportional to the frequency of the sensor output since, as the frequency of the sensor output increases, the discharge time of the capacitor decreases and the charge left on the capacitor (and thus the voltage left across the capacitor) increases.

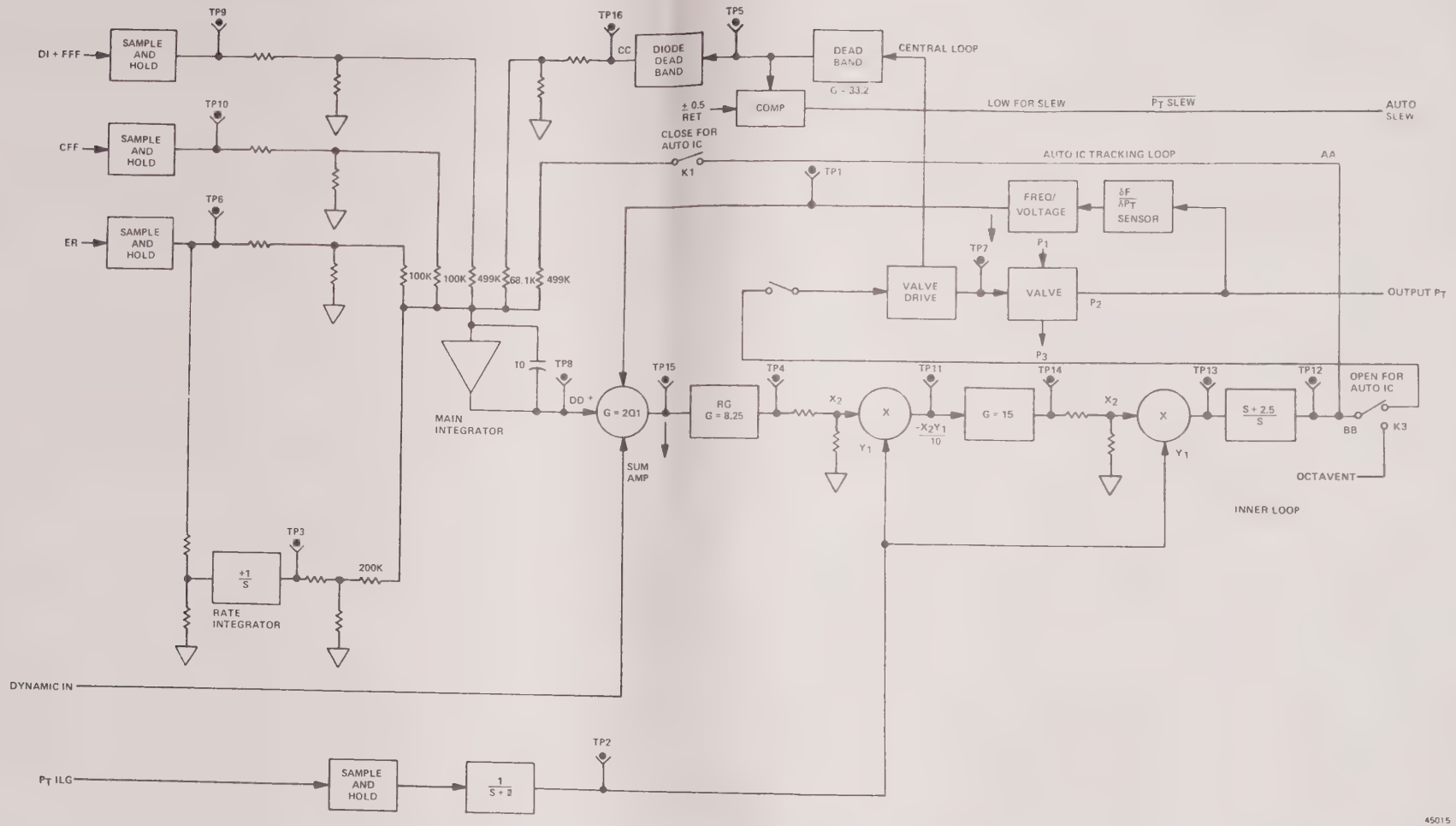

P_t Inner Loop Card A12 Block Diagram
Figure 4-33

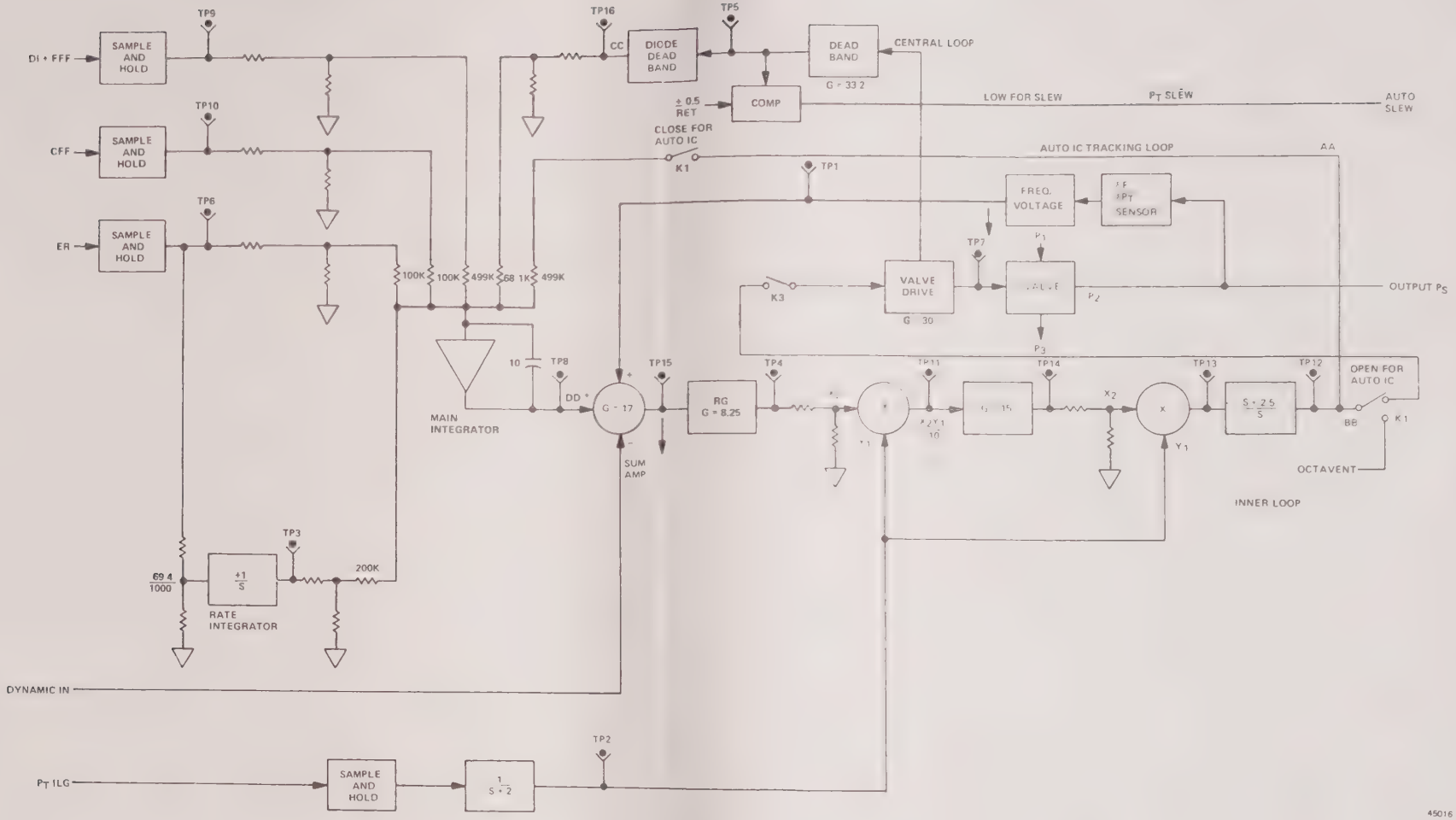

P_S Inner Loop Card A13 Block Diagram
Figure 4-34

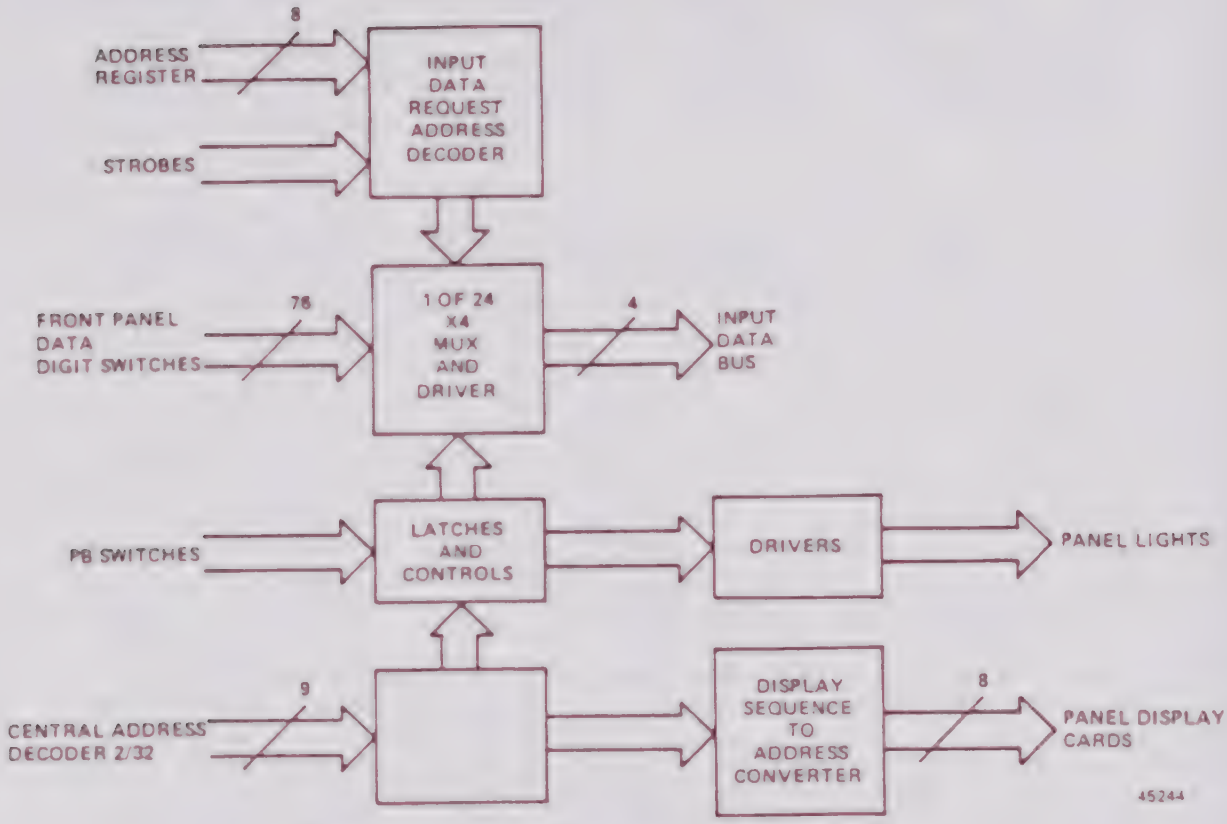

Front Panel Multiplexer Card A14 Block Diagram
Figure 4-35

3. J. Front Panel

The display (front) panel consists of the front panel (FP) multiplexer card (A14), two identical display cards (A15/A16), and the front panel itself, which contains the mode switches and the command input switches.

(1) Card A14

Most of the display panel logic is contained on the FP multiplexer card, shown in figure 4-35.

Operation of the FP multiplexer is controlled by the processor. Outputs to be displayed by the display panel are sent to the FP multiplexer by the processor through the control and D/A card. The display address word is decoded by the output data address decoder and fed into the display sequence to address converter, which converts it to the proper format for use by the display cards.

Mode switching commands from the processor are also received on the CADL lines. These commands are decoded and sent to the mode switching network to cause the lamp drivers to illuminate the appropriate pushbutton lights. The pushbutton lights are energized to inform the operator that the requested mode has indeed been entered.

Most of the lighted pushbutton switches control their own lamp driving networks so that pressing a pushbutton turns the pushbutton lamp on or off at the same time that the corresponding switch state is put into the multiplexer. Press one of these pushbuttons to generate a signal that is used to toggle (set or reset) a flip-flop circuit on the FP multiplexer card. The output of the flip-flop controls the multiplexer information that is passed along to the processor, and also controls the lamp driver for the lighted pushbutton. The FP multiplexer card also contains gating circuitry which inhibits the flip-flop operation, then mode switching when the requested mode change is not allowed by system operation constraints. For example, the CONTROL pushbutton is inhibited whenever the system is in self test because control is not meaningful until a proper display mode has been selected.

Pressing the DSSL, DQCL, or either precision rate pushbutton only sets the appropriate multiplexer bit. The lamp driver is under the direct control of the processor via the CADL network. The processor (via the CADL) can also set or reset any of the flip-flops to change the mode of any of the other lighted pushbuttons. Thus, use of the flip-flops for mode switching and lamp driving allows the system to be completely operated by an ATE (via the processor) through the optional ATE interface card.

Data input commands operate in a similar manner. Press the command enter pushbutton to place a 1 in CE bit of the X4 multiplexer. The processor interrogates the multiplexer each PRF to determine if the command enter has been pressed. If the multiplexer bit is set, the processor proceeds to interrogate the multiplexer for all of the data words in the multiplexer. The multiplexer contents are determined by the positions of the digital lever and thumbwheel switches on the front panel. The processor continues to interrogate all of the data words, four bits at a time, until it has received all of the input data. It also resets the command enter bit to 0. During further interrogation, the processor does not request data input from the multiplexer until the CE bit is again set to 1 when the command enter pushbutton is pressed.

Regardless of the CE bit status, the processor continues to interrogate the multiplexer for mode switching requests from the front panel switches via the mode switching network. It also continues to transmit data to the displays via the TS2 bus.

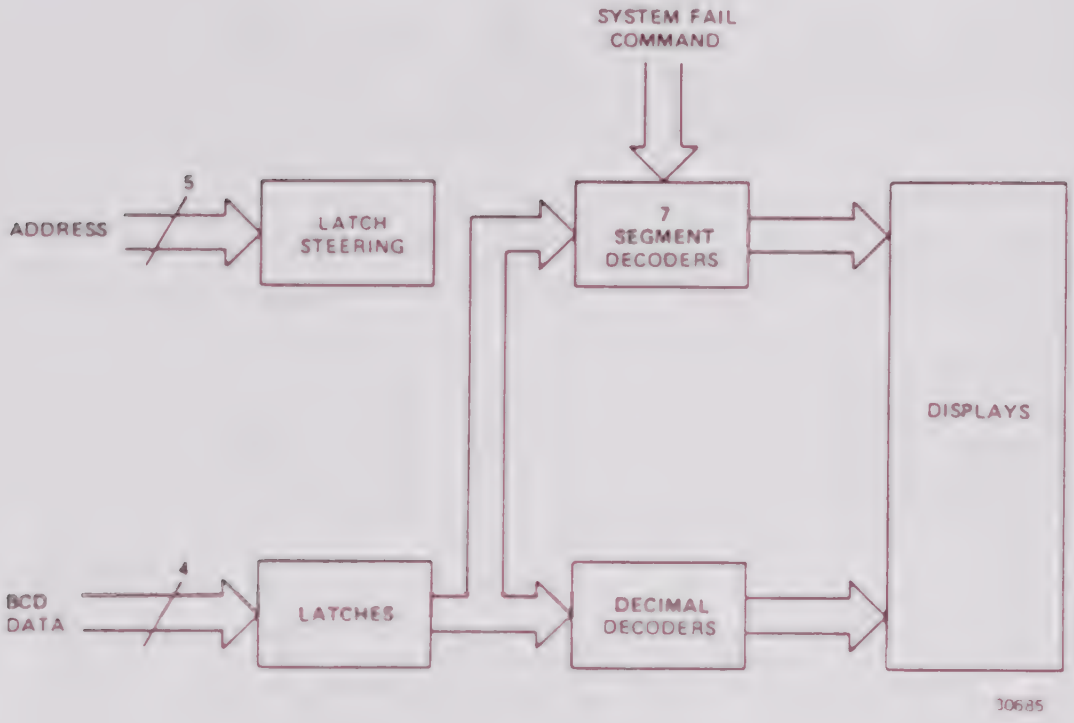

Display Cards A15 and A16 Block Diagram
Figure 4-36

3. J. (2) Cards A15 and A16

A block diagram for the display cards is shown in figure 4-36. Expanded BCD data is received from the FP multiplexer card and fed into the proper input data latches by latch steering circuits. The latches consist of a group of seven 4-bit data registers. The input data from the FP multiplexer card is not true BCD data because it also contains six alphabetic character codes and six decimal point location codes, as well as the ten decimal character codes. The data stored in the latches is then decoded by two decoding circuits. One decoder is used for the decimal data and the other is used for the alphabetic characters and the decimal point location. The decoder outputs are fed into display data registers which drive the gas discharge display. The display data registers also receive a system status signal from card A7. $\overline{\text{SFAIL}}$ blanks the lowest significant digit when it is low.

Two display cards are used, one for P_s and one for P_t.

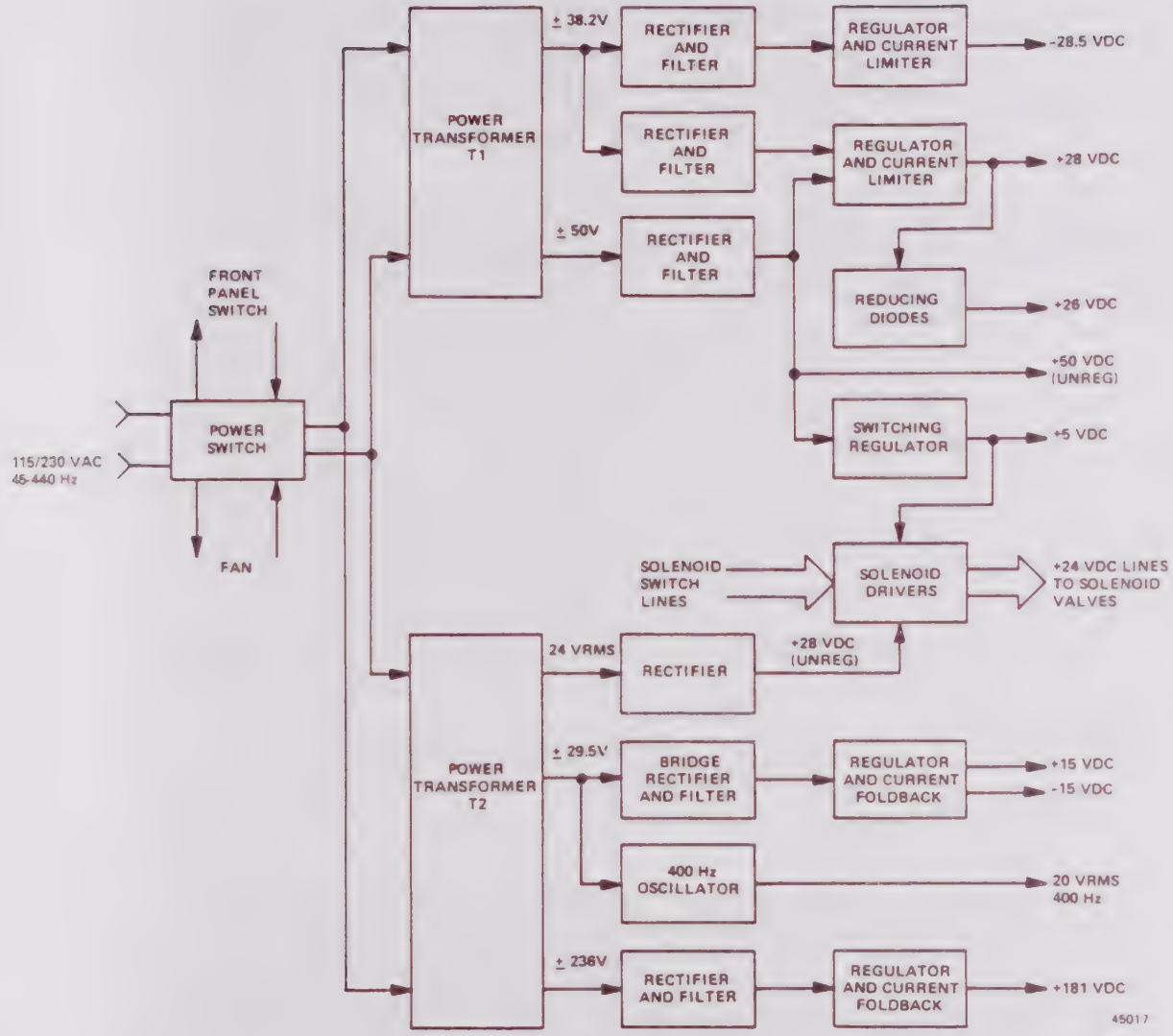

Power Supply A17 Block Diagram
Figure 4-37

3. K. Card A17

Figure 4-37 shows the block diagram of power supply A17. The power switch is a triac circuit controlled by the front panel POWER switch. The triac acts as a solid-state relay to apply the 115/230 volt, 45 to 440 Hz input power to the power transformers.

Power transformer T1 has two center-tapped secondary windings. The 38.2-volt output drives two separate circuits that rectify, filter, regulate, and current limit -28.5 volts dc for the EAROM on card A8 and, after diode reduction, +26 volts dc for the sensor heater blankets.

The 50-volt output is rectified and filtered to provide unregulated 50 volts dc for the +28 volt dc regulator and current limiter, the P_s and P_t sensor assemblies, and a switching regulator. The switching regulator produces a rectified and filtered +5 volt dc operating voltage and power for the switching transistors in the solenoid drivers. The switching regulator provides output protection by shutting down for the duration of any overload condition. The input control lines for the solenoid drivers originate on card A7.

Power transformer T2 has three center-tapped secondary windings. The 24-volt rms output is rectified to provide unregulated +28 volts dc to drive the output transistors in the solenoid drivers. The 29.5-volt output supplies power to two circuits. One circuit is a bridge rectifier and filter whose output is then regulated to +15 and -15 volts dc by a circuit employing current foldback for overload protection. The other circuit is a free-running oscillator that generates a 20-volt rms, 400-Hz signal that is fed to card A7 to drive the POK timer. The 236-volt output is fed through a rectifier and filter circuit to another regulator, which uses current foldback to produce the +181 volts dc required by the gas discharge displays.

L. Cards A18 and A19

No detailed theory of operation is given here for the P_s and P_t sensor assemblies. Any attempted repair of either of these assemblies necessitates recalibration of the sensor. Since the sensor can only be recalibrated at the factory, it must be returned to Sperry Flight Systems for repair.

M. Subassembly A20

The card rack (A20) contains no circuitry. Interconnections are contained in the wire list, table 4-13.

Section 4. Troubleshooting

1. General

These troubleshooting procedures are provided to facilitate fault isolation to the failed subassembly or chassis mounted part. Two levels of troubleshooting are provided. The first level is provided in the form of a symptom/possible cause table. The second level is a set of procedures for ensuring fault isolation to a specific subassembly when level 1 procedures are inadequate.

Troubleshooting below the subassembly level is left to the discretion of the user and no further procedures are provided here. Schematics for all subassemblies and system wire lists are provided at the end of this section to aid in further troubleshooting.

The procedures contained in both sections are not remedies, but procedures to determine the subassembly or component at fault. If exchanging a circuit card solves the problem, then the exchanged card is at fault. These procedures also assume that the system wiring and subassembly connectors are not at fault. If the listed possible causes can be ruled out by following these procedures, the wiring or the connectors are suspect.

Figure 4-38 shows the locations of the test points used by these procedures as viewed from the top of the system. Power supply and sensor outputs can be tested without disconnecting the system connectors by inserting a needle or fine probe into the connector at the applicable connector pin. These procedures apply to single failure modes only.

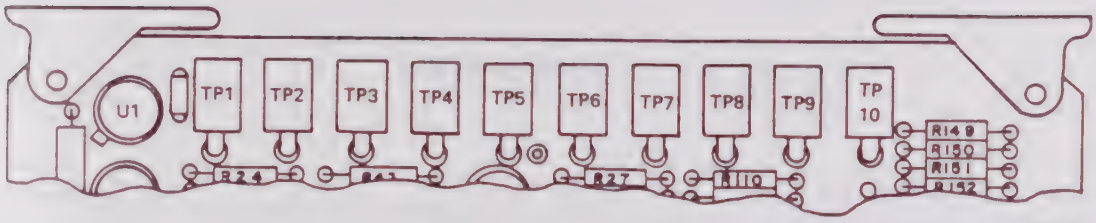

INNER LOOP TEST POINTS

Test Point Locations (A12 and A13)
Figure 4-38

2. Level 1 Fault Isolation

Level 1 fault isolation procedures are keyed to specific failure symptoms which are identifiable from the front panel. The procedures are presented in three tables. The first set of symptoms may occur during system self test and during mode transitions, and are listed in table 4-8. The second set of symptoms may occur during measure mode operation. These measure mode symptoms are listed in table 4-9, and the procedures assume that none of the symptoms found in table 4-8 exist. The third set of symptoms may occur during control mode operation and are listed in table 4-10. The control mode procedures assume that none of the symptoms listed in either table 4-8 or 4-9 have occurred.

Failure Symptom	Possible Cause	Procedure
1. No lights, system apparently dead.	• Input power failure • Fuse • Power switch • A17	• Check power connection. • Check fuse. • Check power cord. • Check continuity of power switch. • Check for power supply output.
2. Power light on, system does not respond to any commands, self test does not operate.	• A17 • A9 • Processor	• Check all power supply outputs. • Exchange card A9. • Exchange cards A1, A2, A3, A4, and A5 one at a time and recheck.
3. Displays OK, no lights work in any mode, otherwise system operates normally.	• A17	• Check 26-volt output of A17.
4. During self test only, all lights (except POWER) continuously on or continuously off; otherwise, system and lights operate normally.	• A7 or A14	• Exchange A7 or A14.
5. All lights continuously on in all modes; otherwise, system operates normally.	• A7 or A14	• Exchange A7 or A14.
6. Single light does not light.	• Lamp • A14	• Replace lamp.
7. During self test, lights do not stop flashing, system does not enter display sequence.	• Processor • A8 • A7	• Exchange cards A1, A2, A3, A4, A5, A6, A7, and A8 one at a time and recheck self test.
8. System does not leave display sequence regardless of which display mode is selected.	• A14	• Exchange A14.

Level 1 Troubleshooting (Self Test)
Table 4-8

Failure Symptom	Possible Cause	Procedure
9. System does not leave display sequence when a specific display mode is selected. Operates normally when other display modes are selected. Selected display mode button lights when pressed.	• A14	• Exchange A14.
10. Same as 8 but button does not light when pressed.	• Display mode switch • A14	• Check switch. • Exchange A14.
11. System enters self test intermittently for no apparent reason.	• Power surges • EMI sources • A17	• Check input power. • Check installation site for EMI radiation. • Check stability of +5 volt dc output of A17.
12. Display digit dim or missing in all modes.	• Gas discharge tube • Display card	• Replace tube. • Replace A15 or A16.
13. Display digit stuck on one character.	• Display card	• Replace A15 or A16.
14. All digits of one display stuck on specific characters.	• Display card	• Replace A15 or A16.
15. All digits of both displays stuck on specific characters.	• A9	• Replace A9.
16. All digits of one display are dim, dead, or fluctuating. Other display is OK.	• Display card	• Replace A15 or A16.
17. All digits of both displays are dim, dead, or fluctuating.	• A17 • Display card	• Check +181 volt dc output of A17. • Check for shorted +181 volt dc input line on each display card.
18. Meaningless character action in one display only. Either one digit or all digits.	• Display card	• Replace A15 or A16.

Failure Symptom	Possible Cause	Procedure
19. Meaningless character action in both displays.	• A9 • Display card	• Exchange A9. • Disconnect one display card.
20. System does not enter desired mode. Mode select switch lights.	• A14	• Replace A14.
21. System does not enter desired mode. Mode select switch does not light.	• Mode select switch • A14	• Check switch. • Replace A14.
22. Display reads CSF (Check sum fail).	• A8	• Flip P_s or P_t calibration switch on and then off. If CSF persists, exchange card A8. If problem is solved, recalibrate.

Level 1 Troubleshooting (Self Test)
Table 4-8 (cont)

Failure Symptom	Possible Cause	Procedure
1. FFF appears in display.	• A9 • Sensor	• Exchange A9. • Check frequency outputs of both sensors.
2. CCC or dd remains in display after power has been on for 30 minutes.	• A7 • Sensor	• Exchange A7. • Check for +15 volts dc on HIGH HEAT OFF output of P_S sensor (A18). If voltage present, A19 is at fault. If voltage not present, A18 is at fault.
3. Sustained E in display.	• Processor • Sensor • A9 • A7	• Exchange A1, A2, A3, A4, A5, A6, and A8 one at a time and recheck. • Exchange A9. • Exchange A7. • Level 2 sensor tests.
4. System does not measure on one side.	• Solenoid valve • Control valve • Sensor	• Level 2 solenoid tests. • Level 2 inner loop tests.
5. System does not measure in either channel.	• A9 • A7 • A5	• Exchange A9. • Exchange A7. • Exchange A5.
6. Vacuum appears in system during measure mode.	• Control valve	• Level 2 inner loop tests.
7. System does not hold pressure.	• Leak	• Leak test per table 4-17.
8. Measurements do not track applied pressures.	• Out of calibration • Sensor	• Calibrate per table 4-17.

Level 1 Troubleshooting (Measure Mode)
Table 4-9

Failure Symptom	Possible Cause	Procedure
1. Sustained E in display.	• P_{in} error • V_s or V_t error • Clogged filter • Pressure regulator • Solenoid valve • Control valve • Inner loop • Leak	• Verify Pin. • Verify vacuum source. • Verify regulator outputs. • Level 2 solenoid tests. • Level 2 inner loop tests. • Leak test per table 4-17.
2. FFF appears in display.	• Processor • Inner loop	• Exchange A1, A2, A3, A4, A5, A6, and A8 one at a time and recheck. • Level 2 inner loop tests.
3. Pressure runaway, no E in display.	• A8 • Processor • A5	• Exchange A8. • Exchange A1, A2, A3, A4, one at a time and recheck. • Exchange A5.
4. Pressure runaway, sustained E in display.	• Inner loop	• Level 2 inner loop tests.
5. System does not execute command, limit lights do not flash, valid command.	• CE switch • A14	• Check CE switch.
6. DQCL or DSSL lights do not flash when invalid command is entered.	• A9 • A7 • A14	• Exchange A9. • Exchange A7.
7. Q_c or subsonic limits cannot be set or changed.	• Disable limit switch • A14	• Check switch.
8. Precision rate lights do not respond when selected	• Rate switch • Inner loop • A14	• Check switch.

Level 1 Troubleshooting (Control Mode)
Table 4-10

Failure Symptom	Possible Cause	Procedure
9. Precision rate lights flash excessively during precision rate operation (Beyond the time limits specified in table 4-4.)	• Inner loop card	• Check switch.
10. System responds to precision rate, but light does not flash when system enters or leaves precision rate.	• A9 • A14	• Exchange A9. • Exchange A14.
11. System executes command but to wrong values.	• Command switches • A14	• Level 2 command switch tests. • Exchange A14.
12. Pressure maintenance is unstable.	• Inner loop • Sensor	• Test inner loop per table 4-17. • Level 2 sensor test.
13. No response to dynamic input in either channel.	• DI switch on front panel • A14 • A5 • A8	• Check switch. • Exchange A14. • Exchange A5. • Exchange A8.
14. No response to dynamic input in one channel only.	• Inner loop card • A5 • A8	• Check switch. • Exchange A5. • Test inner loop per table 4-17. • Exchange A8.

Level 1 Troubleshooting (Control Mode)
Table 4-10 (cont)

3. Level 2 Fault Isolation

These procedures are to be performed when directed by the level 1 procedures.

A. Sensor Tests

The P_s and P_t sensors each provide both sine wave and square wave outputs to the system. The sine wave output is used by the inner loop and the square wave is used by the F/C converter. All of the connections to each sensor are listed in table 4-11.

NOTE: Replacement of the P_s sensor requires replacement of U1, U2, U16, U17, U20, and U21 on card A6. Replacement of the P_t sensor requires replacement of U8, U9, U12, U13, U23, and U24 on card A6.

Pin	Signal Name	Pin	Signal Name
A	45 VDC Gnd	R	Spare
B	+45 VDC	S	Temp Resistor (N.C.)[1]
C	Spare	T	Temp Resistor (N.C.)[1]
D	±15 VDC Gnd	U	Sensor Out (Square)
E	±15 VDC Gnd	V	Sensor Out Shield
F	+15 VDC	W	Cover Bridge Out (N.C.)[1]
H	-15 VDC	X	Heater Voltage In (N.C.)[1]
J	Spare	Y	ID[2]
K	+15 VDC out	Z	ID[2]
L	Chassis Gnd	a	Too Hot Out
M	AGC Voltage (N.C.)[1]	b	ID[2]
N	High Heat Off Exc	c	Sine Shield
P	High Heat Off	d	Sine Out

[1] N.C.: Not connected
[2] ID: Identification pins
P_s ID: Short between pins Y and Z, b open
P_t ID: Short between pins b and Z, Y open

Sensor Connections
Table 4-11

To test the sensor, perform the following steps:

(1) Test power inputs to both sensors. If any power input is bad, disconnect one sensor and recheck the other sensor. If the input is good, the disconnected sensor is at fault. If the input is still bad, reconnect that sensor and disconnect the other one and recheck. If the input is now good, the disconnected sensor is at fault. If the input is still bad, the power supply has failed.

3. A. (2) Test for presence of the sine wave output. If the sine wave is not present, remove the applicable inner loop card and recheck. If the sine wave appears, the inner loop card is at fault; if not, the sensor is at fault.

(3) Test for presence of the square wave output. If the square wave is not present, remove card A9 and recheck. If the square wave appears, card A9 is at fault; if not, the sensor is at fault.

(4) Change the pressure applied to the input port of the sensor and check for a corresponding change in both the sine and square wave outputs. If either output does not change, or if the frequency shift of one output does not match that of the other output, the sensor is at fault.

(5) Check the P_s sensor first, wait until power has been applied for 30 minutes, and check for +15 volts dc on the HIGH HEAT OFF output. If +15 volts dc is not present, the P_s sensor is at fault. Repeat for the P_t sensor.

(6) Command the system to the low pressure limit, ambient, and the high pressure limit and monitor the sine wave output with a frequency counter. If the output does not respond to the pressure changes, is noisy, or exhibits a random frequency drift at any of the three pressures, the sensor is at fault.

(7) Perform the P_s or P_t accuracy test in accordance with table 4-17, to be supplied at a later revision. If the sensor output is out of tolerance, perform the fine calibration procedure per table 4-17. If the sensor output is still out of tolerance, the sensor is at fault.

3. B. Solenoid Valve Tests

The solenoid valves are driven by signals from cards A5 and A7, which operate the solenoid drivers located in the power supply. To test the solenoid valves, perform the following steps:

(1) Cycle the system through the self test, measure, and control modes to determine if any of the solenoid valves are operating.

(2) If none of the solenoid valves operate during mode switching, check for the +24 volt dc power supply output. If the +24 volt dc output is bad, the power supply is at fault. If the +24 volt dc output is good, card A7 is at fault.

(3) If the solenoid valves operate, but at the wrong times, card A5 or A7 is at fault.

3. B. (4) If some of the solenoid valves operate normally during mode switching, repeat mode switching procedure and monitor the driving signal to the inoperative solenoid valves. If the power signals to the solenoids switch between 0 and +24 volts dc, the solenoid valve is at fault. If the power signals do not switch, proceed to step (5).

(5) Exchange card A7 and repeat mode switching procedure while monitoring the power signal to the inoperative solenoid valve. If the power signal switches between 0 and +24 volts dc, the exchanged card A7 is at fault, if not, repeat for card A5. If this does not work, the power supply is at fault.

(6) Perform the leak test in accordance with table 4-17, to be supplied at a later revision. If the procedures determine that a leak exists, command the system to a high pressure, apply Leak-Tec to the suspect pressure lines, and watch for bubbles to appear.

CAUTION: LEAK-TEC IS CONDUCTIVE AND MUST BE USED WITH DISCRETION.

If no leaks can be found with Leak-Tec, a solenoid valve is at fault. Close the manual shutoff valves, tightly cap the P_s and P_t ports, and repeat the leak test. If a leak still exists, S2 or S4 is at fault; if not, S1 or S3 is at fault.

C. Inner Loop Tests

Although the P_t and P_s inner loop cards (A12 and A13) are physically different, they operate similarly. The following procedures are to be used for either inner loop. These procedures isolate a fault to the inner loop card, the control valve, the sensor, or the digital control cards.

NOTE: If an inner loop card (A12 or A13) is replaced, the new card must be calibrated in accordance with table 4-17 (to be supplied at a later revision) to match the pneumatic system of the ADT-222B in which it is installed.

To test the inner loop, perform the following steps:

(1) With the system in the control mode, apply pressure changes to the system and monitor the voltage at TP1 of the inner loop card with an oscilloscope. TP1 shall change, nonlinearly, between -10 volts dc and +10 volts dc over the pressure range of the control system. If the sensor output is good (see level 2 sensor tests) and the TP2 voltage does not cover this range, the inner loop card is at fault.

3. C. (2) Monitor TP7 and command the system to its pressure extremes with a 9 in the most significant digit of the rate command. TP7 shall read -10 volts dc after the low pressure command and +10 volts dc after the high pressure command. If the TP7 voltages are correct but the system pressure does not respond, the control valve is at fault. If TP7 responds correctly near ambient pressure but not at high or low pressures, there is a leak in the system. Refer to the solenoid valve tests. If the voltages are not correct, or do not change, proceed to step (3).

(3) Initiate self test and monitor the sample and hold outputs (TP9, TP10, TP6). They shall step between -1 volt dc, 0, and +1 volt dc during self test. If none of the sample and hold outputs respond correctly, card A7 is at fault. If any, but not all, of the sample and hold outputs do not respond correctly, the inner loop card is at fault.

(4) Keep the pressure constant, put the system in the measure mode, and monitor the stability of TP7 and TP8. Put system in control mode and monitor TP7 and TP8. If the voltage at either test point oscillates in the control mode but is stable in the measure mode, the inner loop card is at fault.

D. Command Switch Test

To test the action of the digital command switches, disengage the command switch harness connector from the FP multiplexer card (A14J1 for P_t switches and A14J3 for P_s switches).

Use a VOM to check the continuity pattern of each switch segment with the switch in each of its digit positions. Measure continuity at the rear of each switch segment. The switch connections are soldered to a printed wiring board at the rear of each segment. The top connection is the common line and the other four are, top to bottom, the lines corresponding to digital bit positions 1, 2, 4, and 8. Check the continuity between each of these pins and the common pin for each digit position. The correct continuity pattern for each digit position is shown in table 4-12. If the continuity patterns of the switch segments are correct, the command switch is operating correctly.

Digit Position	Common connected to: 1	2	4	8
0	o	o	o	o
1		o	o	o
2	o		o	o
3			o	o
4 (or minus)	o	o		o
5		o		o
6	o			o
7				o
8	o	o	o	
9		o	o	

NOTE: Continuity or short is indicated by a dot (o) and absence of a dot indicates an open.

Command Switch Continuity
Table 4-12

4. Schematic Diagrams

Schematic diagrams for the ADT-222B subassemblies are shown in figures 4-39 thru 4-52 and are provided to aid in troubleshooting below the subassembly level.

Revision Index (Arrow Designation)	Revision Description	Effectivity

Timing and Control Card A1 Schematic
Figure 4-39 (Sheet 1 of 5)

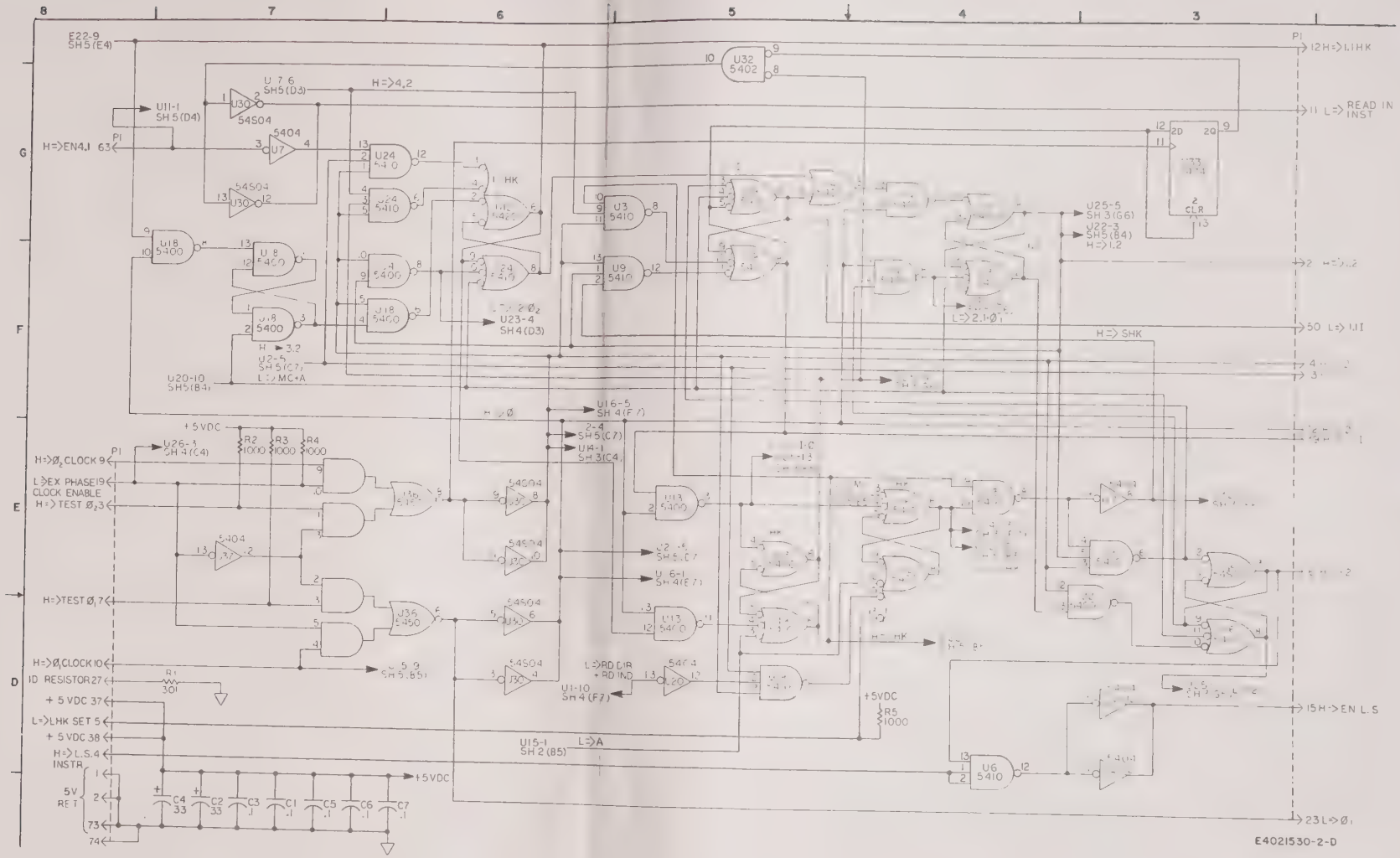

Timing and Control Card A1 Schematic
Figure 4-39 (Sheet 2)

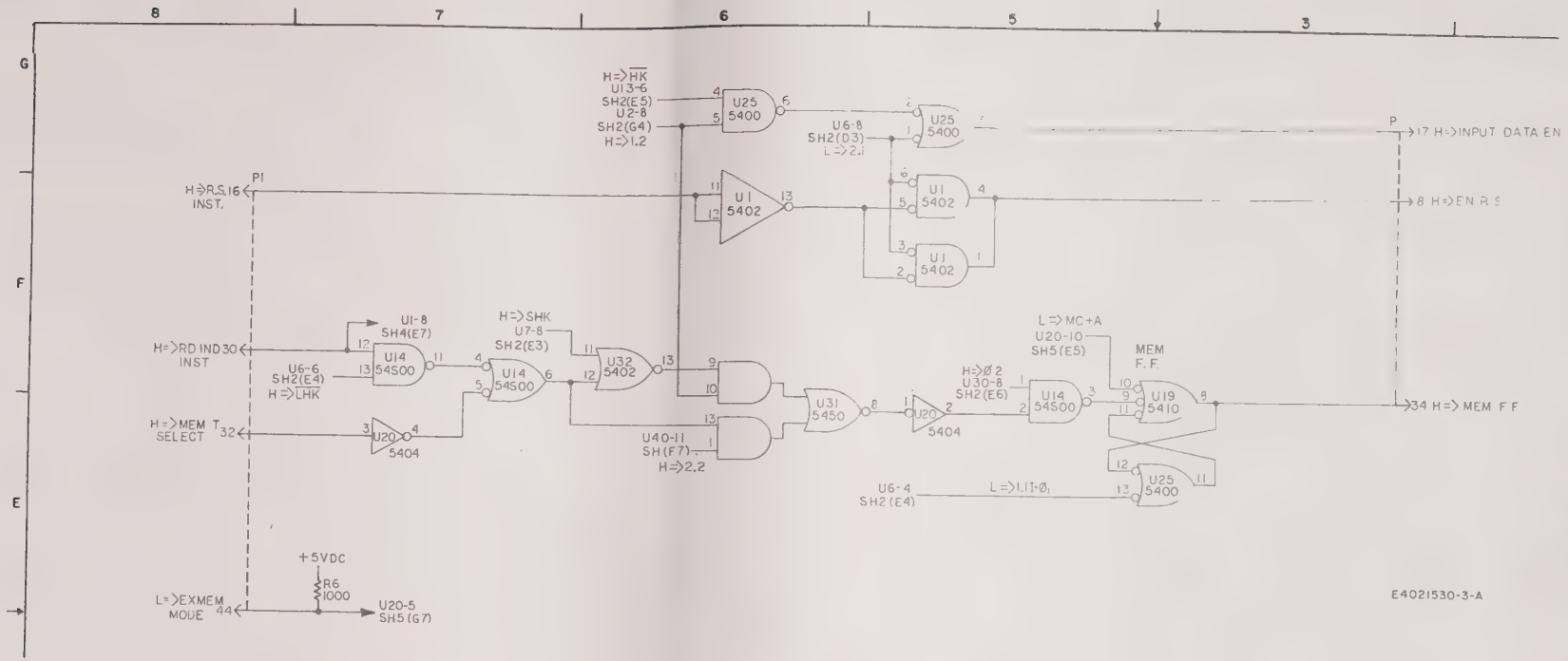

Timing and Control Card A1 Schematic
Figure 4-39 (Sheet 3)

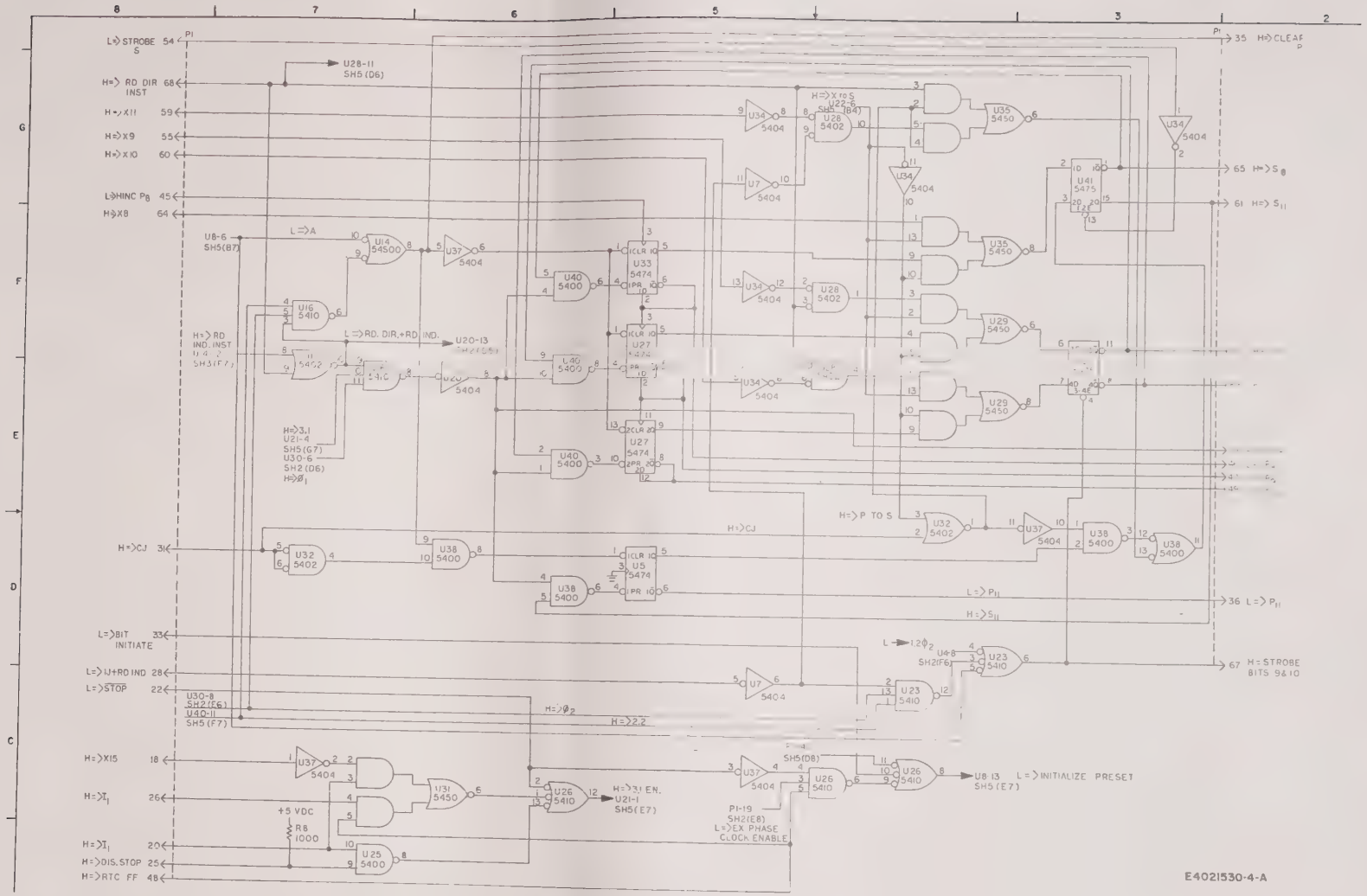

Timing and Control Card A1 Schematic
Figure 4-39 (Sheet 4)

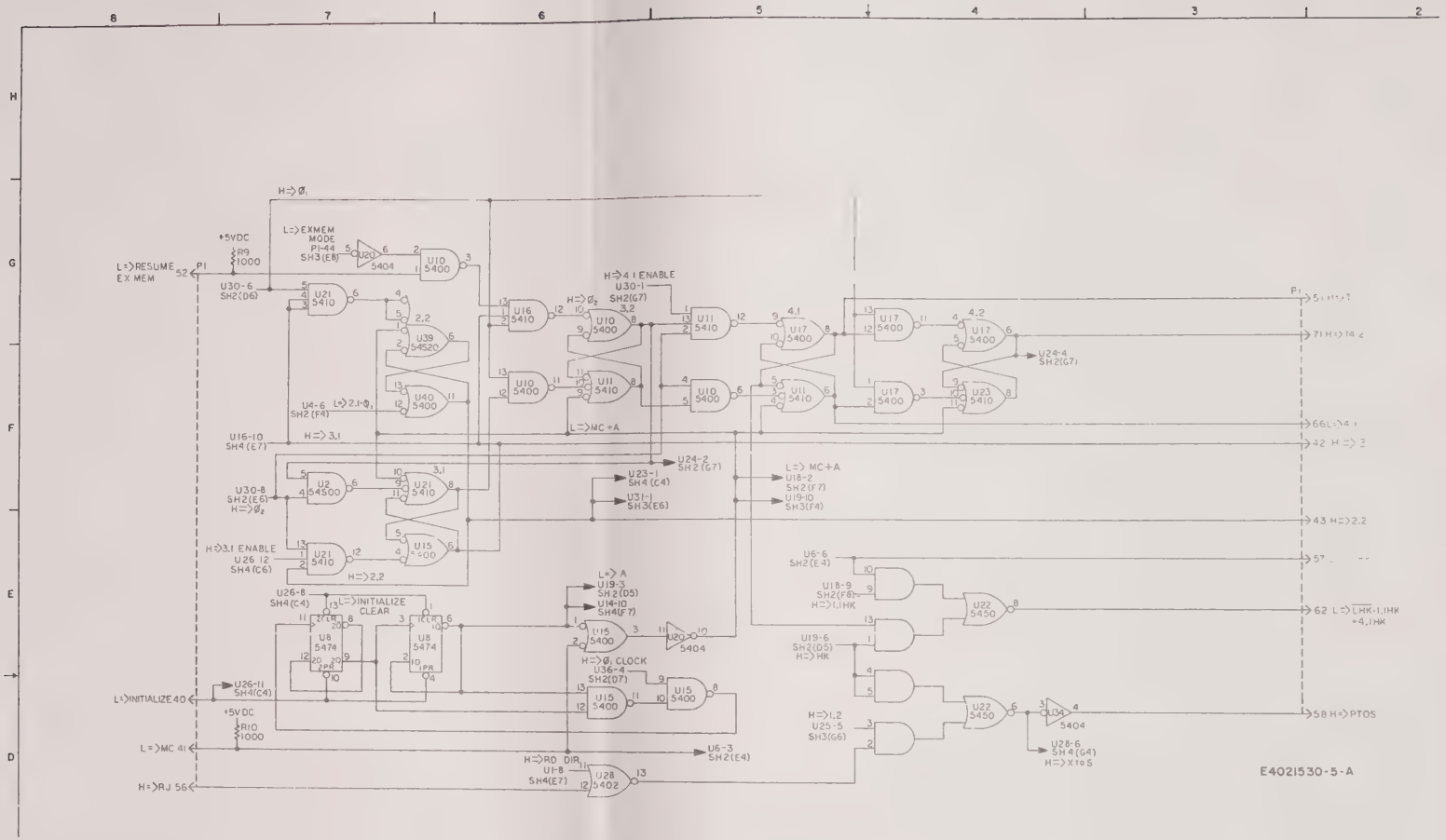

Timing and Control Card A1 Schematic
Figure 4-39 (Sheet 5)

Revision Index (Arrow Designation)	Revision Description	Effectivity

Program Control Card A2 Schematic
Figure 4-40 (Sheet 1 of 5)

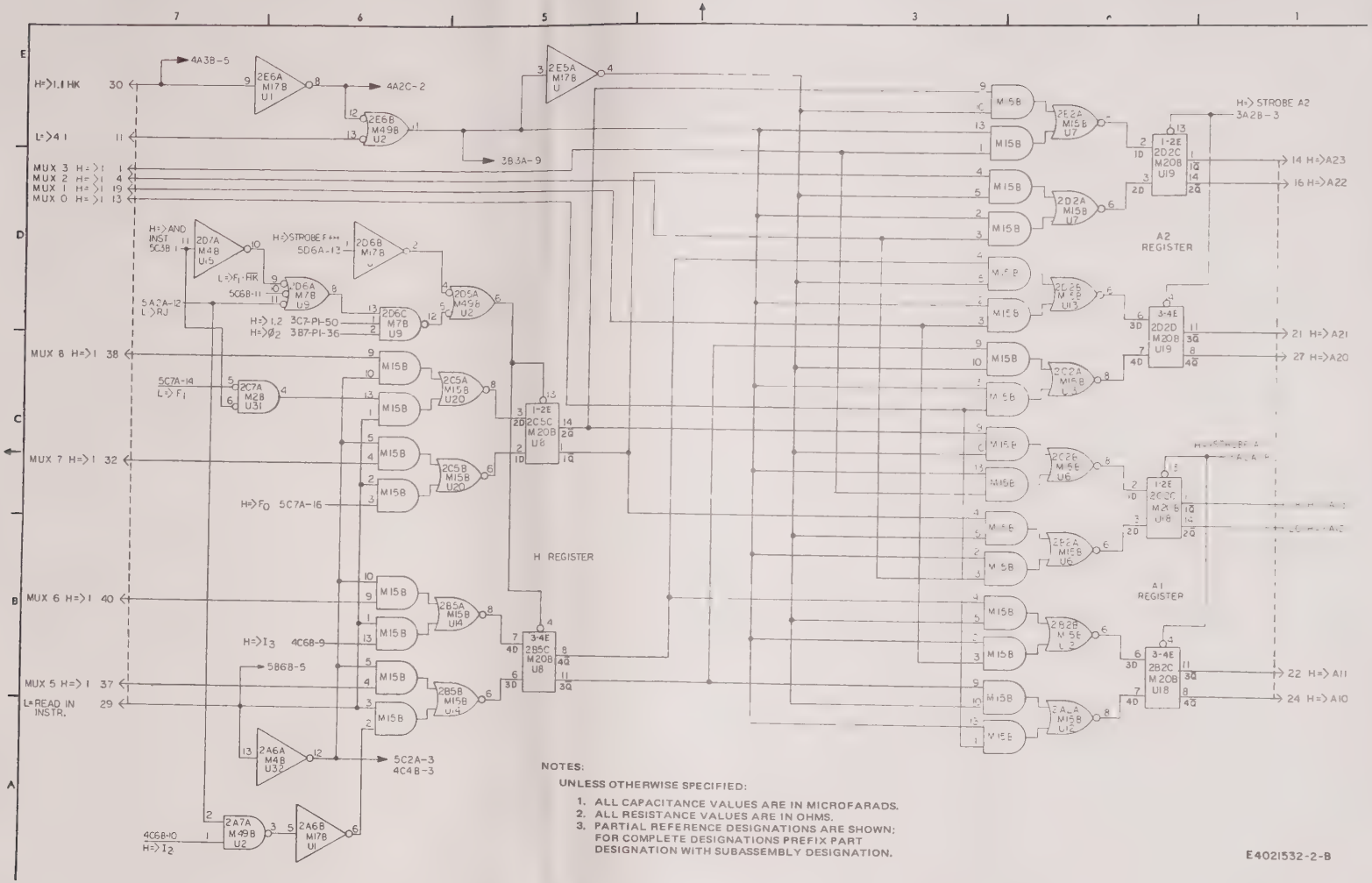

Program Control Card A2 Schematic
Figure 4-40 (Sheet 2)

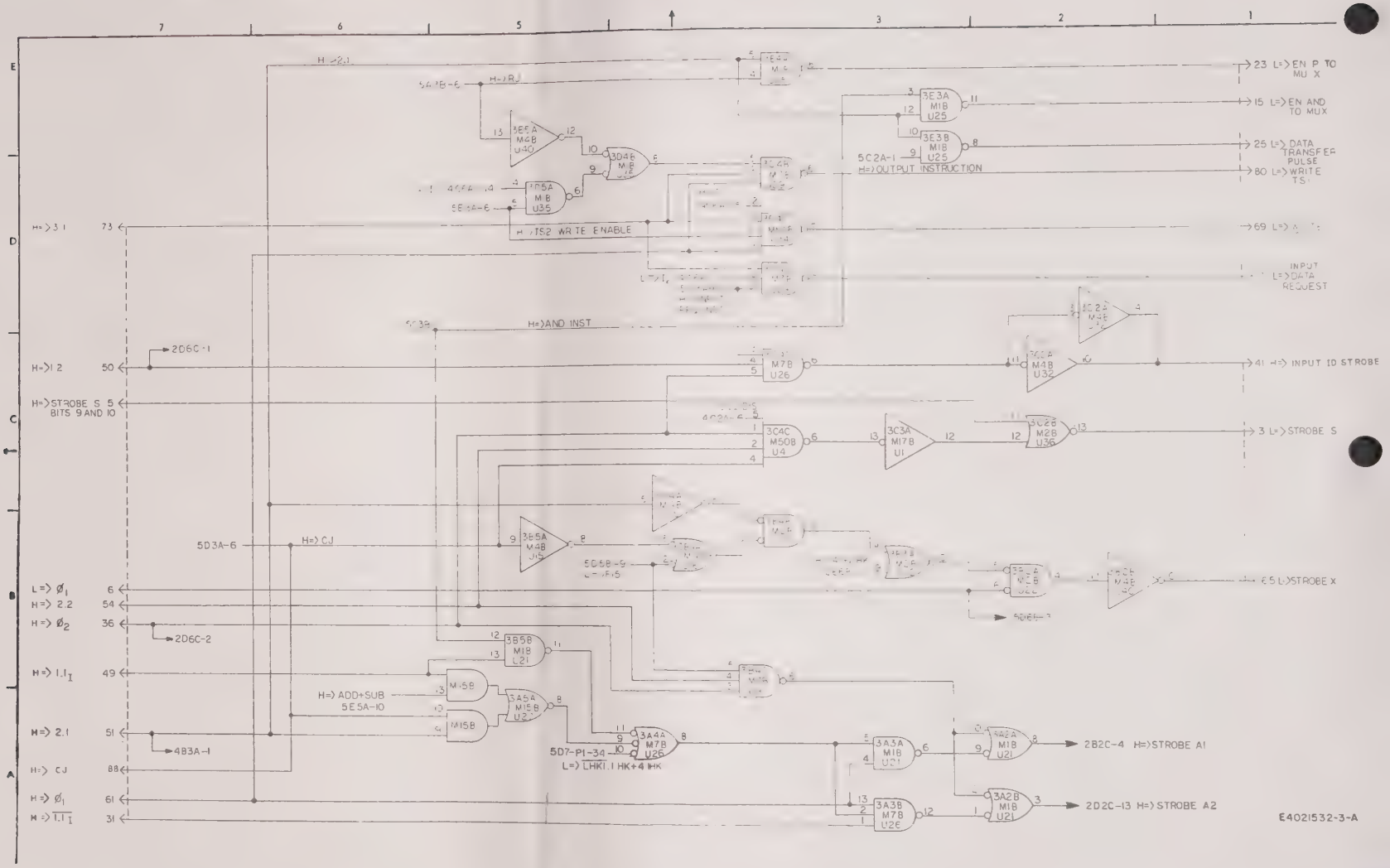

Program Control Card A2 Schematic
Figure 4-40 (Sheet 3)

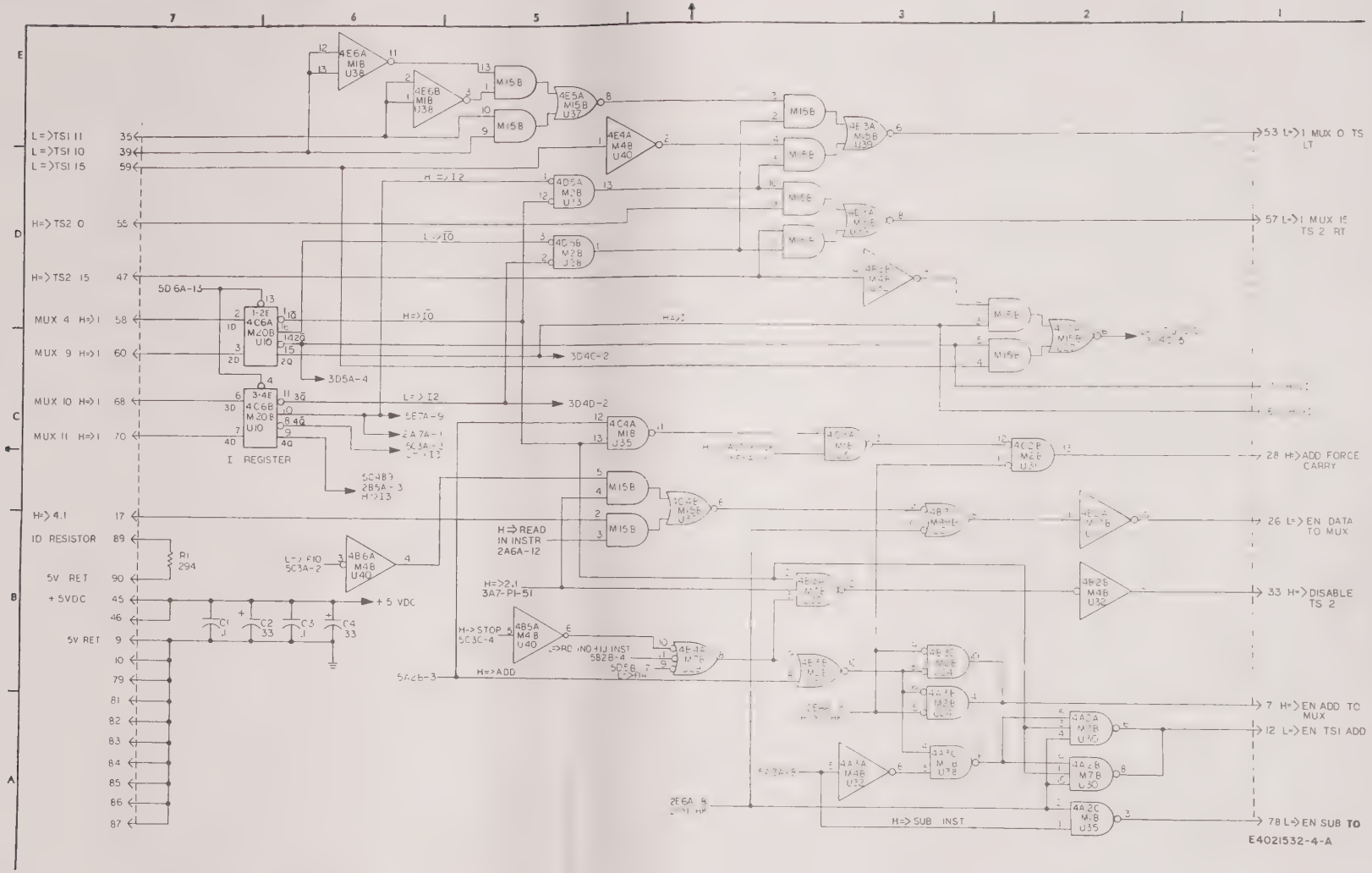

Program Control Card A2 Schematic
Figure 4-40 (Sheet 4)

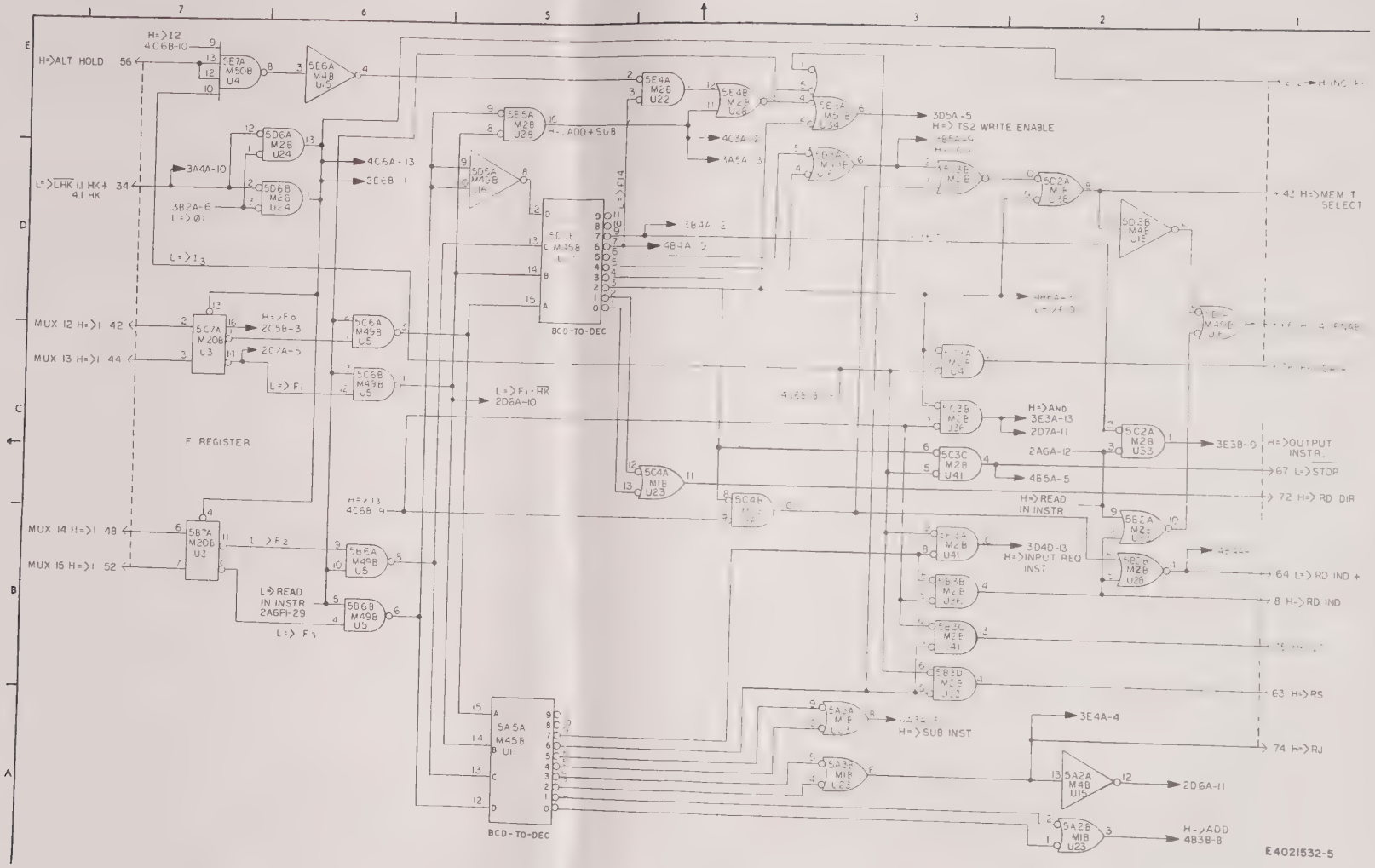

Program Control Card A2 Schematic
Figure 4-40 (Sheet 5)

Revision Index (Arrow Designation)	Revision Description	Effectivity

Arithmetic A/B Card A3, A4 Schematic
Figure 4-41 (Sheet 1 of 8)

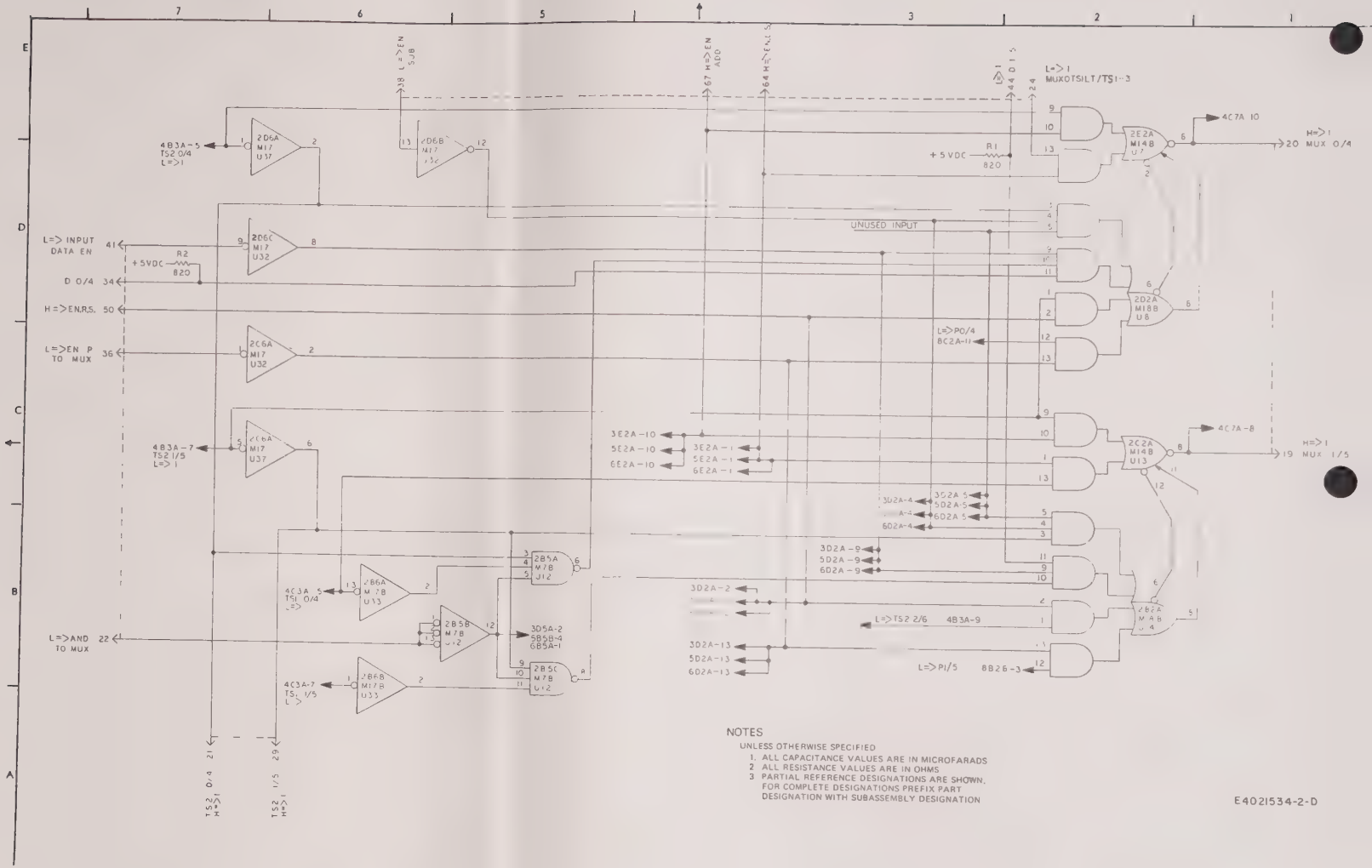

Arithemetic A/B Card A3, A4 Schematic
Figure 4-41 (Sheet 2)

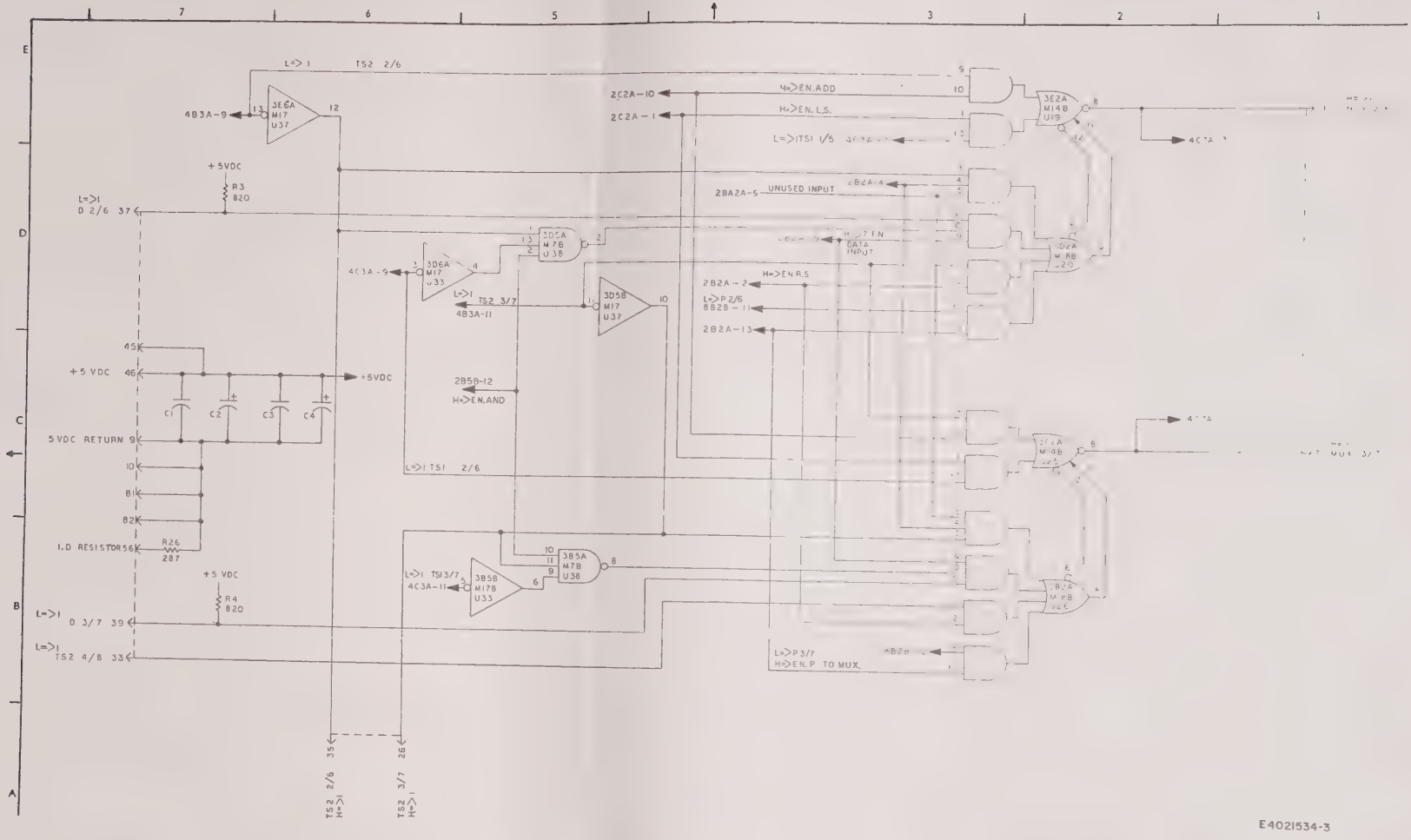

Arithmetic A/B Card A3, A4 Schematic
Figure 4-41 (Sheet 3)

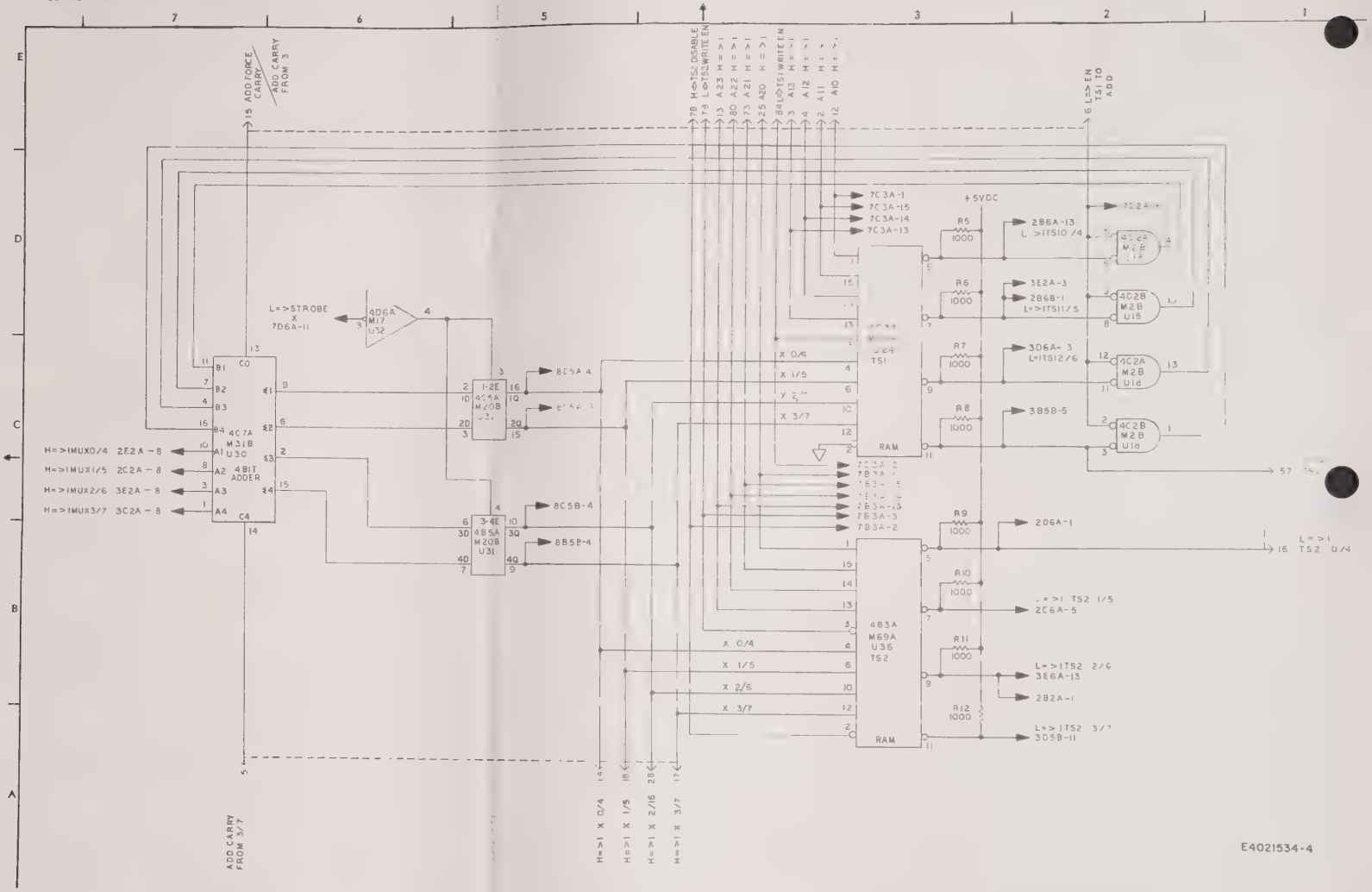

Arithmetic A/B Card A3, A4 Schematic
Figure 4-41 (Sheet 4)

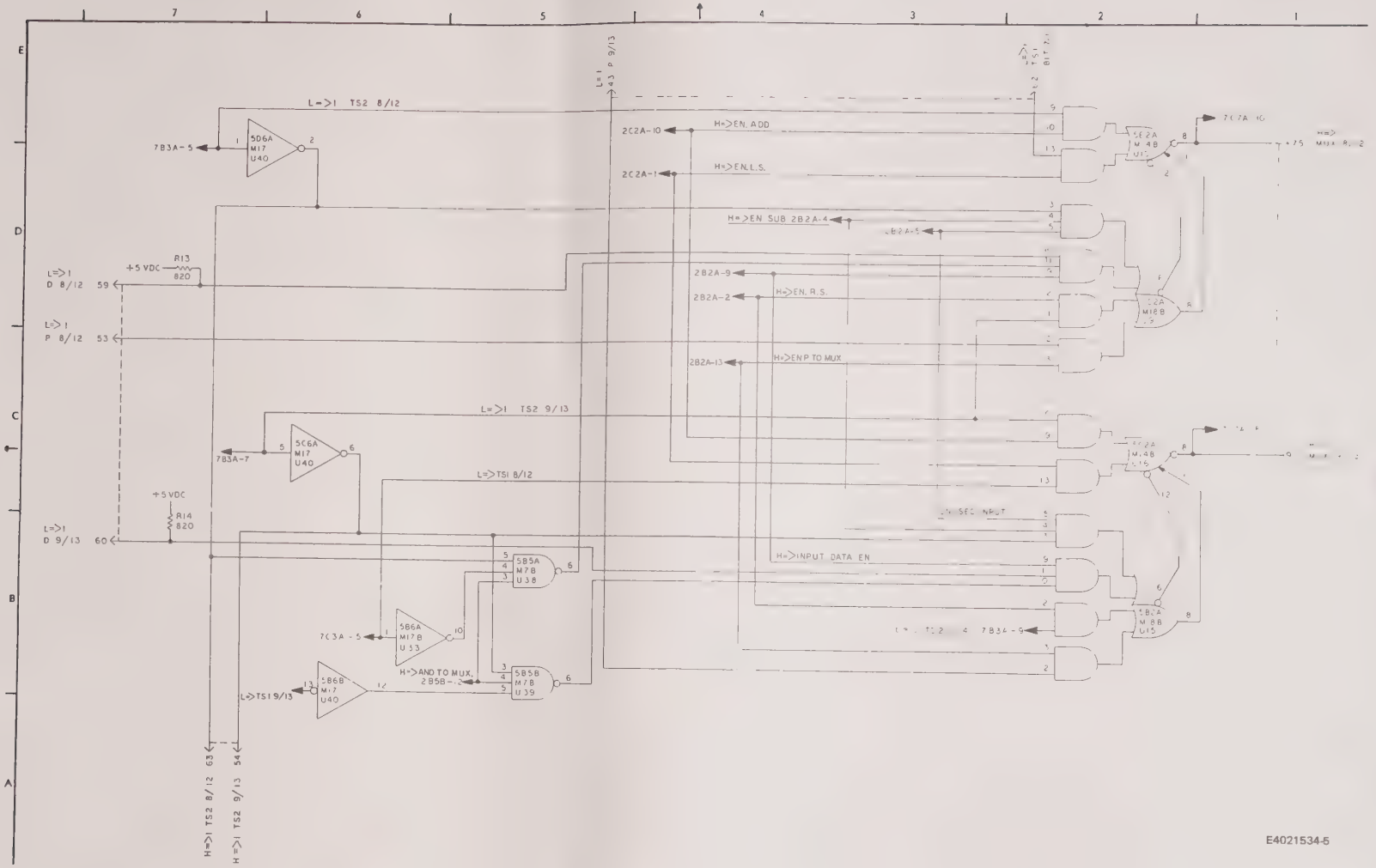

Arithmetic A/B Card A3, A4 Schematic
Figure 4-41 (Sheet 5)

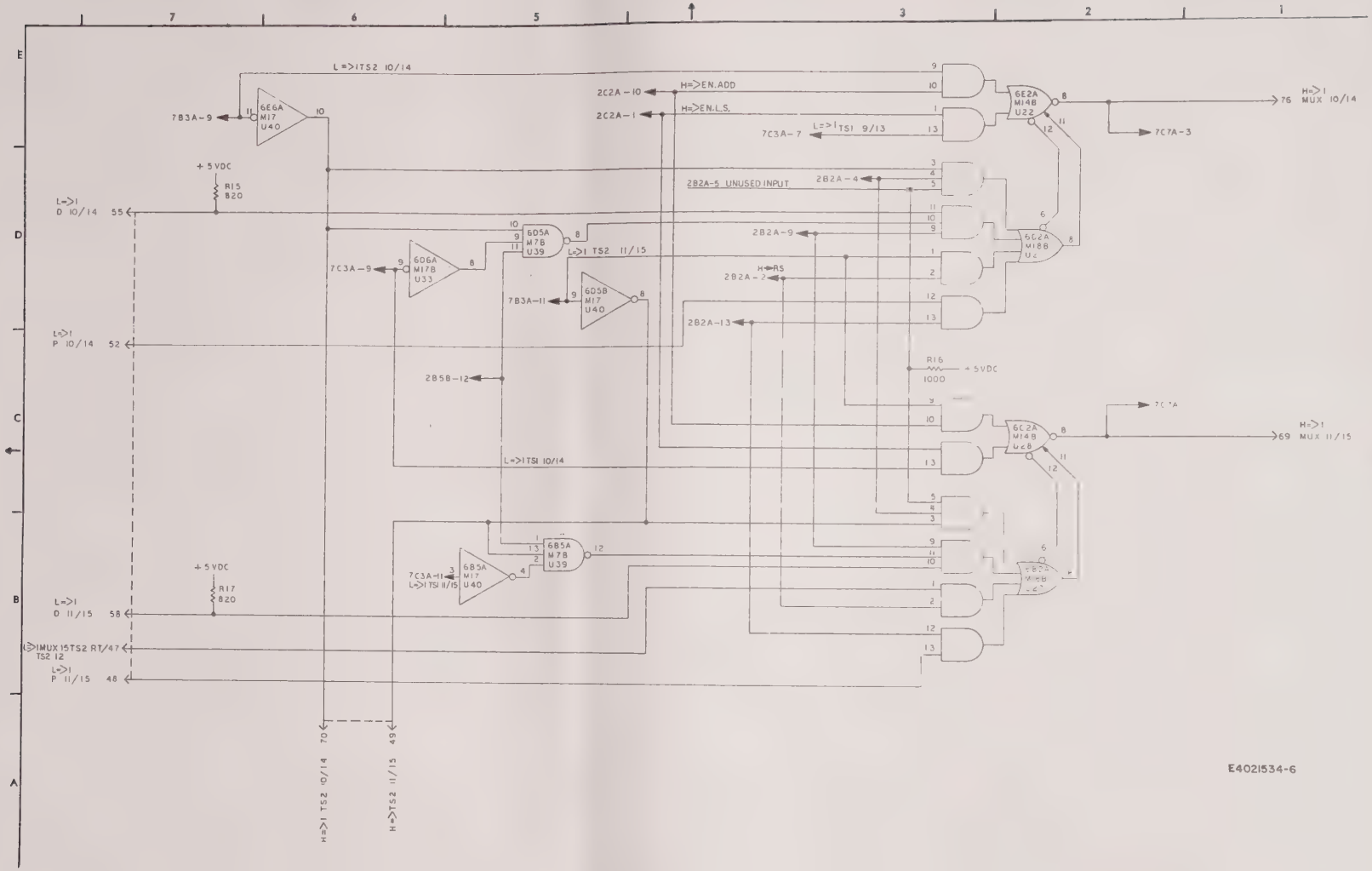

Arithmetic A/B Card A3, A4 Schematic
Figure 4-41 (Sheet 6)

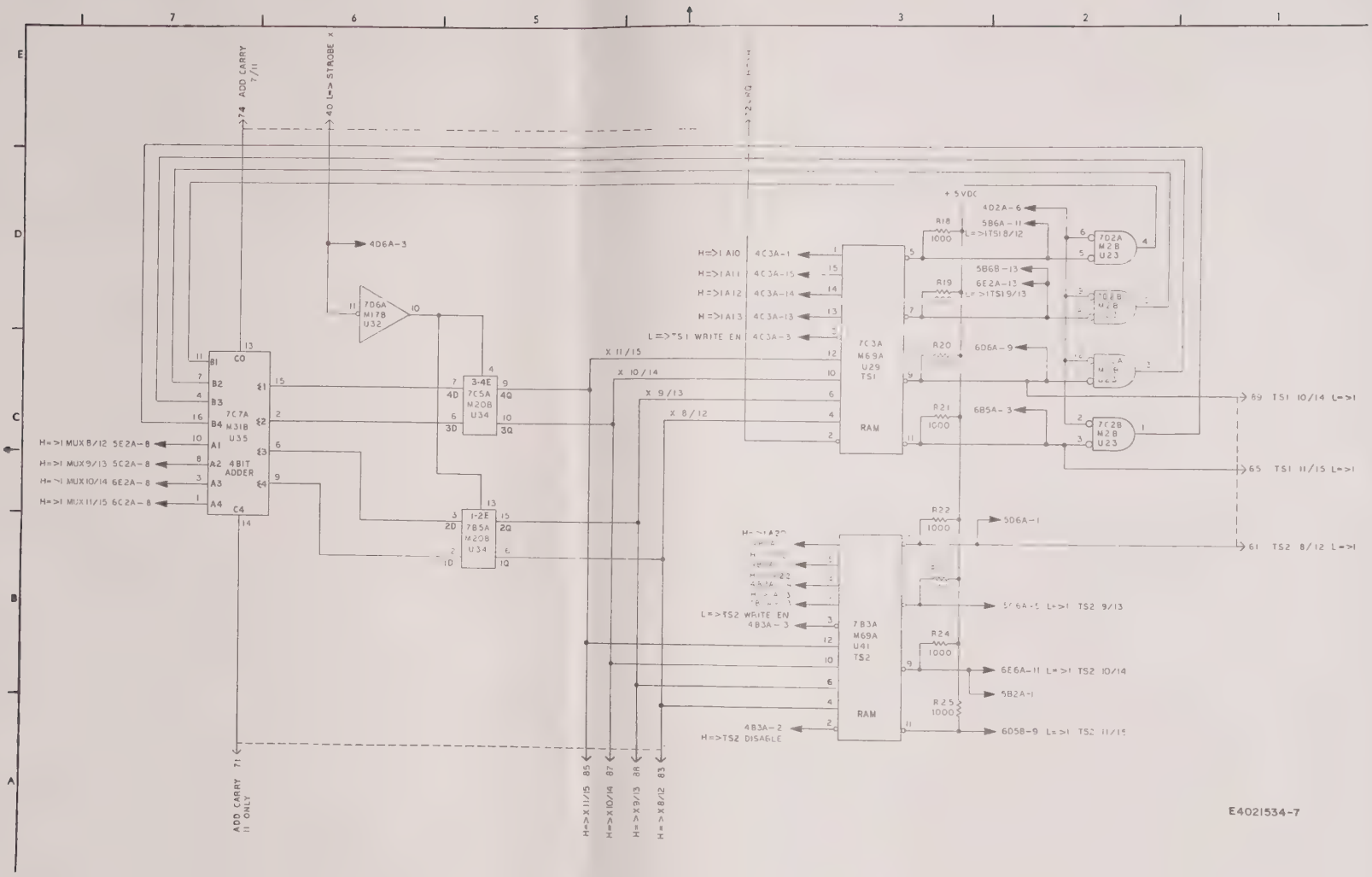

Arithmetic A/B Card A3, A4 Schematic
Figure 4-41 (Sheet 7)

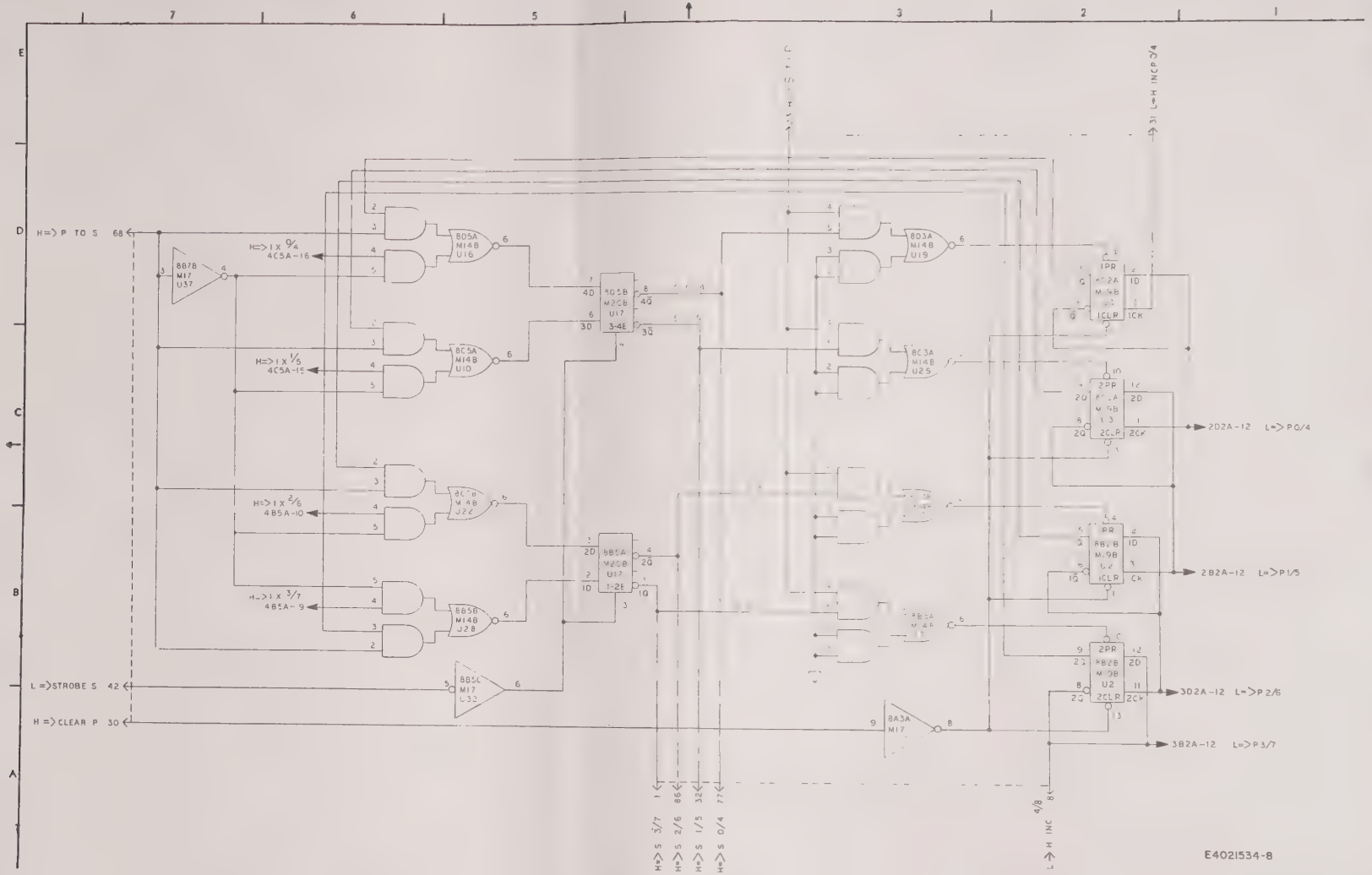

Arithmetic A/B Card A3, A4 Schematic
Figure 4-41 (Sheet 8)

Revision Index (Arrow Designation)	Revision Description	Effectivity

Control and Scratch Pad Card A5 Schematic
Figure 4-42 (Sheet 1 of 5)

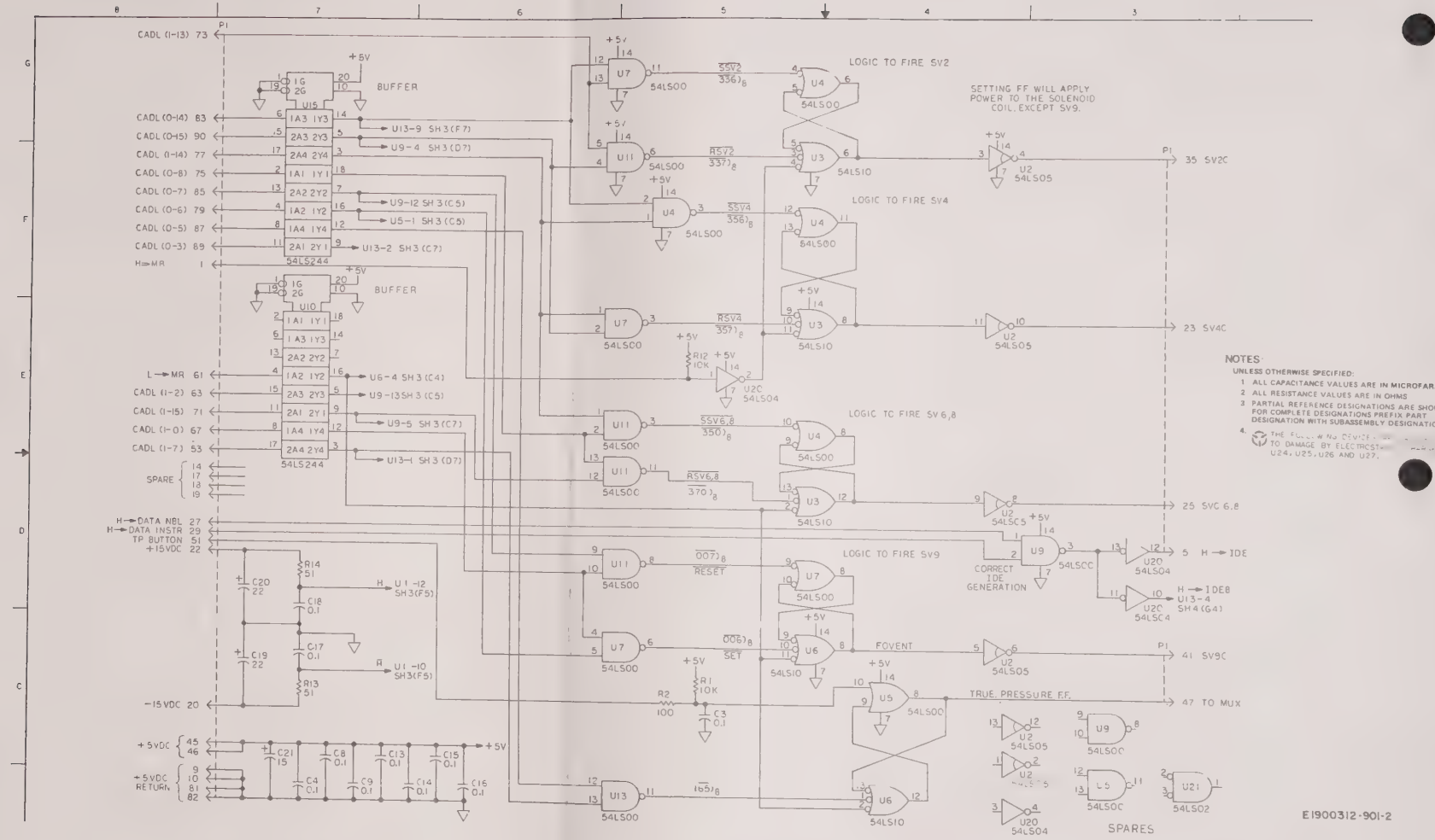

Control and Scratch Pad Card A5 Schematic
Figure 4-42 (Sheet 2)

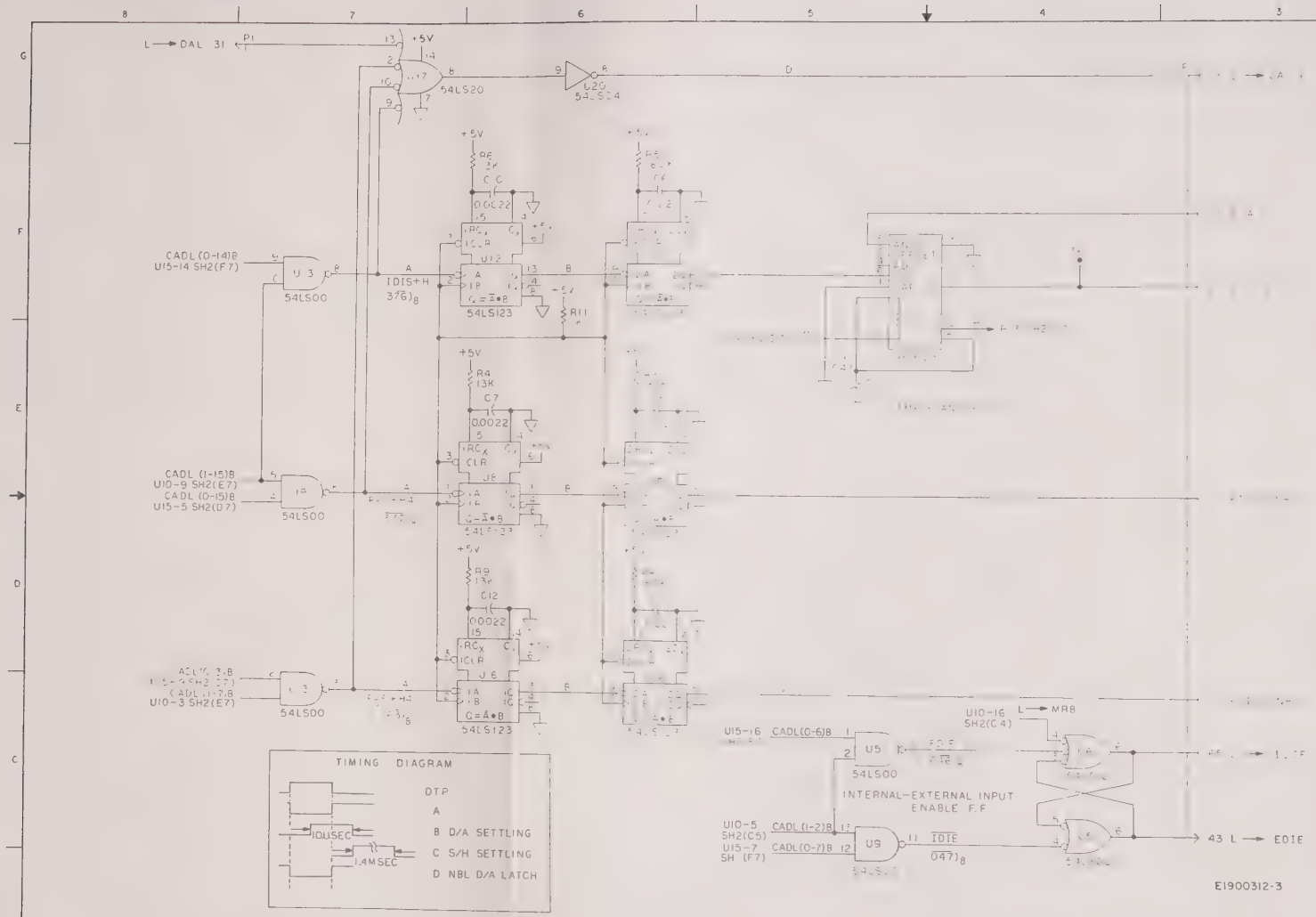

Control and Scratch Pad Card A5 Schematic
Figure 4-42 (Sheet 3)

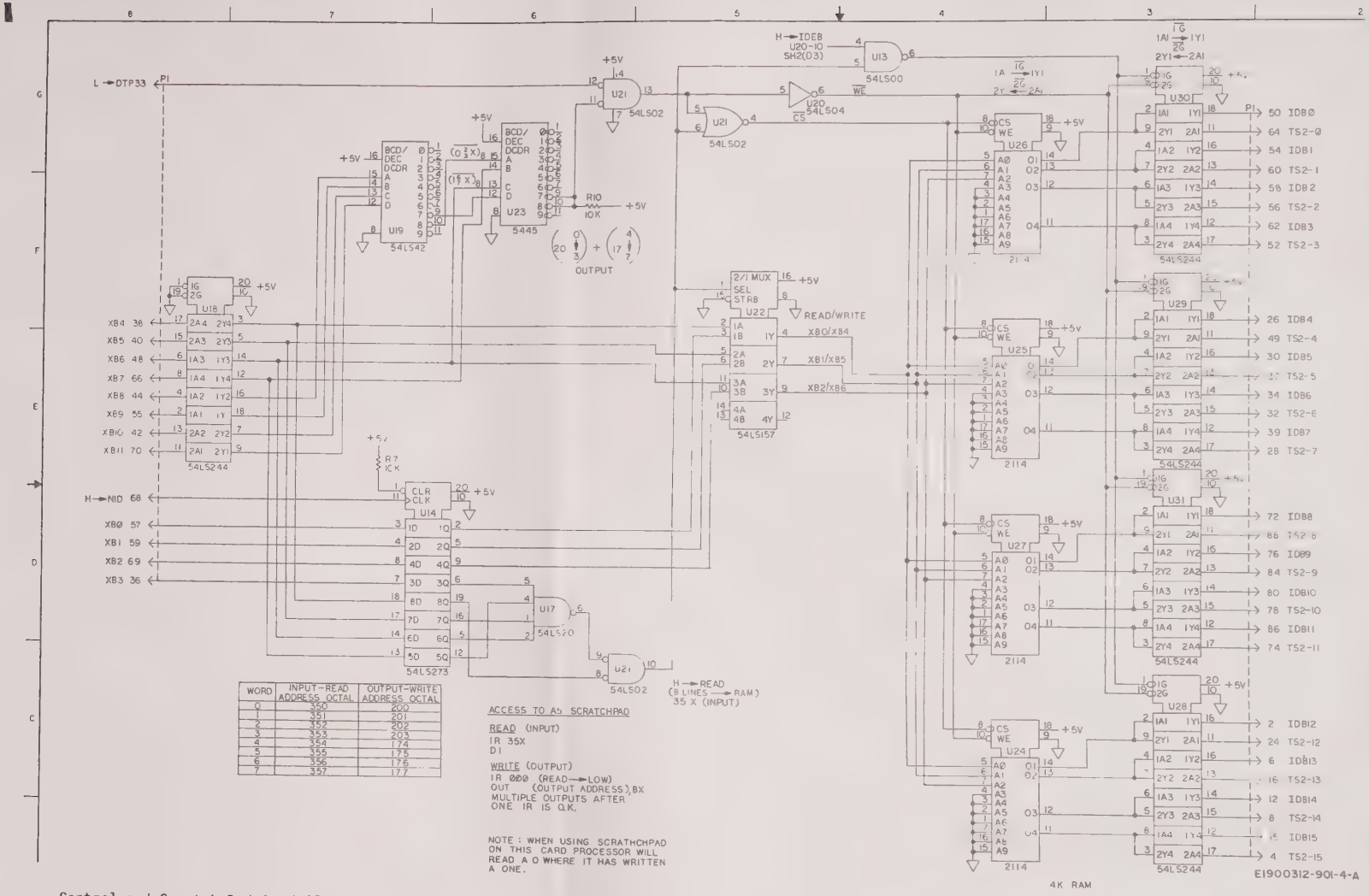

WORD	INPUT-READ ADDRESS OCTAL	OUTPUT-WRITE ADDRESS OCTAL
0	350	200
1	351	201
2	352	202
3	353	203
4	354	174
5	355	175
6	356	176
7	357	177

ACCESS TO A5 SCRATCHPAD

READ (INPUT)
IR 35X
DI

WRITE (OUTPUT)
IR 000 (READ → LOW)
OUT (OUTPUT ADDRESS), BX
MULTIPLE OUTPUTS AFTER ONE IR IS O.K.

NOTE: WHEN USING SCRATCHPAD ON THIS CARD PROCESSOR WILL READ A 0 WHERE IT HAS WRITTEN A ONE.

Control and Scratch Pad Card A5 Schematic
Figure 4-42 (Sheet 4)

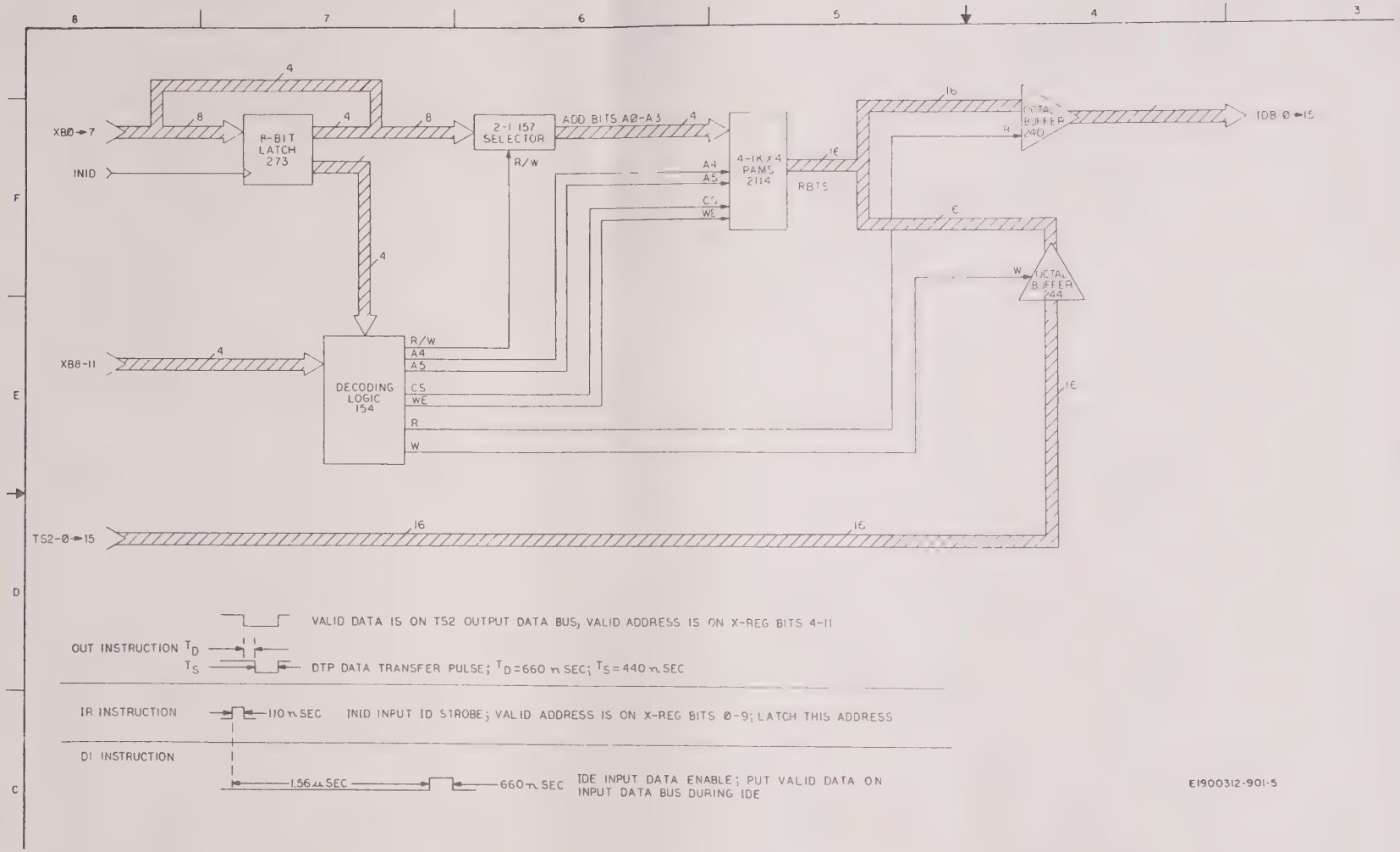

Control and Scratch Pad Card A5 Schematic
Figure 4-42 (Sheet 5)

Revision Index (Arrow Designation)	Revision Designation	Effectivity

Program and Sensor Memory Card A6 Schematic
Figure 4-43 (Sheet 1 of 9)

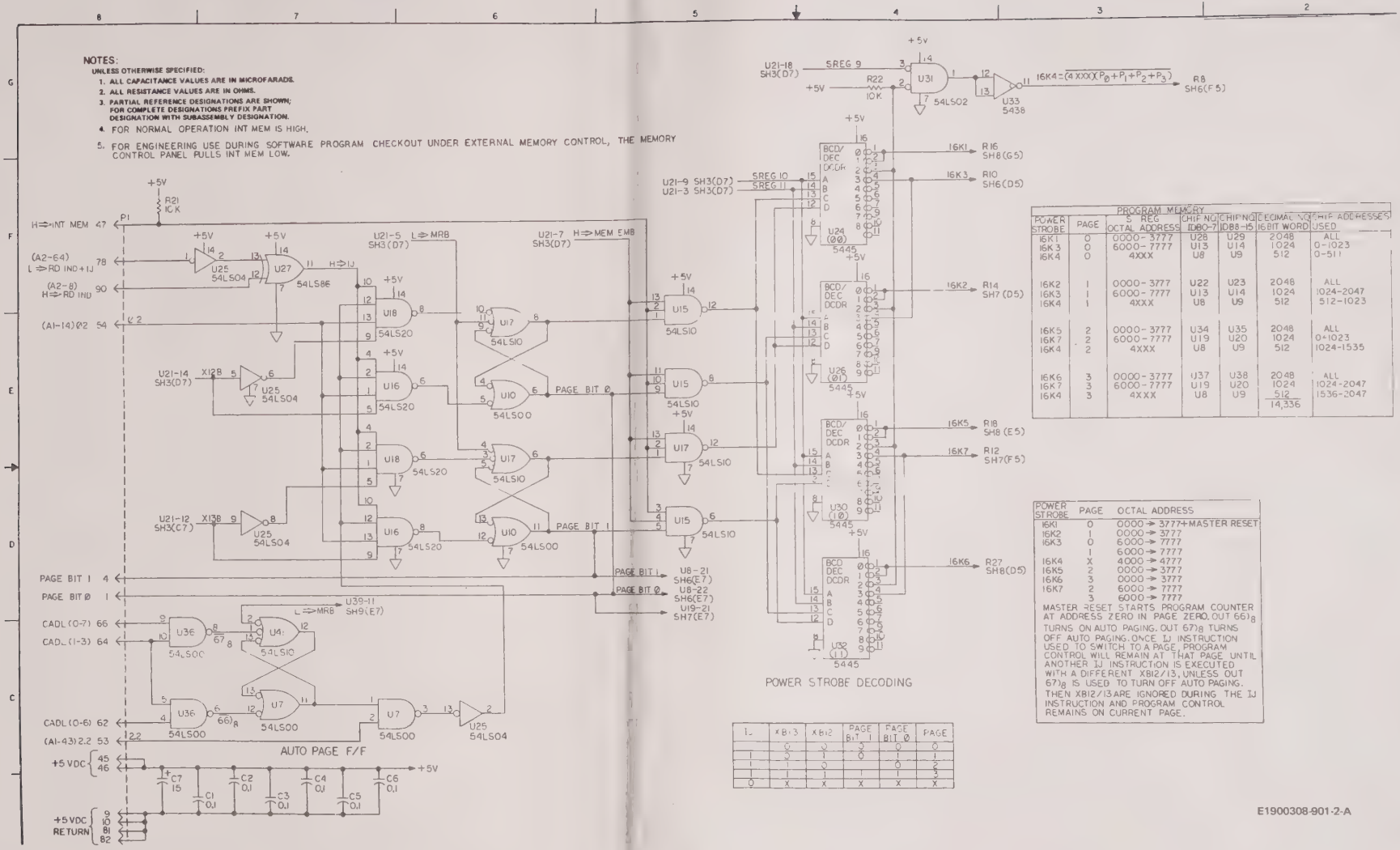

POWER STROBE	PAGE	S REG OCTAL ADDRESS	CHIP NO IDB0-7	CHIP NO IDB8-15	DECIMAL NO 16 BIT WORD	CHIP ADDRESSES USED
16K1	0	0000-3777	U28	U29	2048	ALL
16K3	0	6000-7777	U13	U14	1024	0-1023
16K4	0	4XXX	U8	U9	512	0-511
16K2	1	0000-3777	U22	U23	2048	ALL
16K3	1	6000-7777	U13	U14	1024	1024-2047
16K4	1	4XXX	U8	U9	512	512-1023
16K5	2	0000-3777	U34	U35	2048	ALL
16K7	2	6000-7777	U19	U20	1024	0-1023
16K4	2	4XXX	U8	U9	512	1024-1535
16K6	3	0000-3777	U37	U38	2048	ALL
16K7	3	6000-7777	U19	U20	1024	1024-2047
16K4	3	4XXX	U8	U9	512	1536-2047
					14,336	

PROGRAM MEMORY

POWER STROBE	PAGE	OCTAL ADDRESS
16K1	0	0000 → 3777+MASTER RESET
16K2	1	0000 → 3777
16K3	0	6000 → 7777
	1	6000 → 7777
16K4	X	4000 → 4777
16K5	2	0000 → 3777
16K6	3	0000 → 3777
16K7	2	6000 → 7777
	3	6000 → 7777

MASTER RESET STARTS PROGRAM COUNTER AT ADDRESS ZERO IN PAGE ZERO. OUT 66_8 TURNS ON AUTO PAGING. OUT 67_8 TURNS OFF AUTO PAGING. ONCE IJ INSTRUCTION USED TO SWITCH TO A PAGE, PROGRAM CONTROL WILL REMAIN AT THAT PAGE UNTIL ANOTHER IJ INSTRUCTION IS EXECUTED WITH A DIFFERENT XB12/13, UNLESS OUT 67_8 IS USED TO TURN OFF AUTO PAGING. THEN XB12/13 ARE IGNORED DURING THE IJ INSTRUCTION AND PROGRAM CONTROL REMAINS ON CURRENT PAGE.

IJ	XB13	XB12	PAGE BIT 1	PAGE BIT Ø	PAGE
	Ø	Ø	Ø	Ø	Ø
	Ø	1	Ø	1	1
	1	Ø	1	Ø	2
	1	1	1	1	3
Ø	X	X	X	X	X

E1900308-901-2-A

Program and Sensor Memory Card A6 Schematic
Figure 4-43 (Sheet 2)

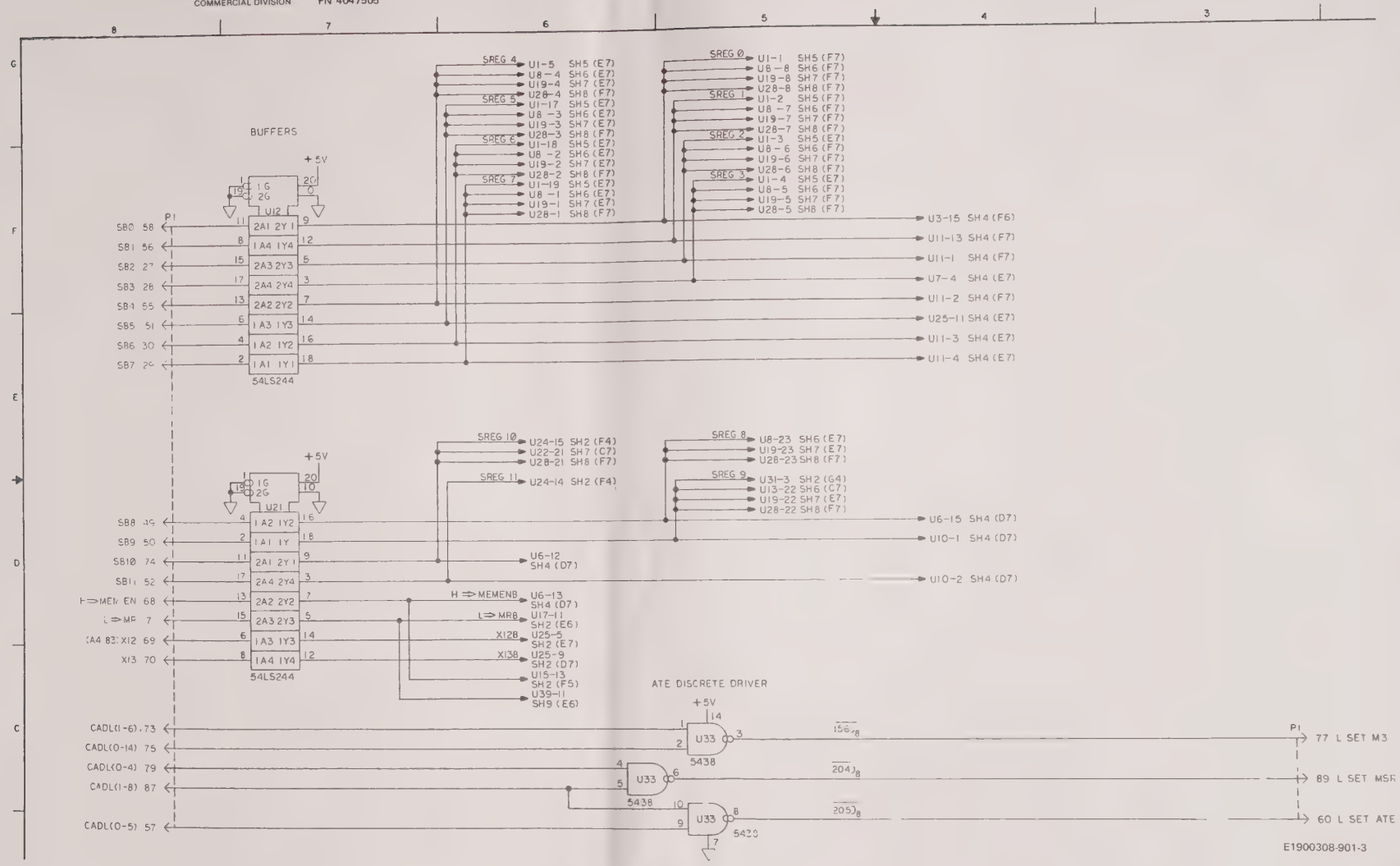

Program and Sensor Memory Card A6 Schematic
Figure 4-43 (Sheet 3)

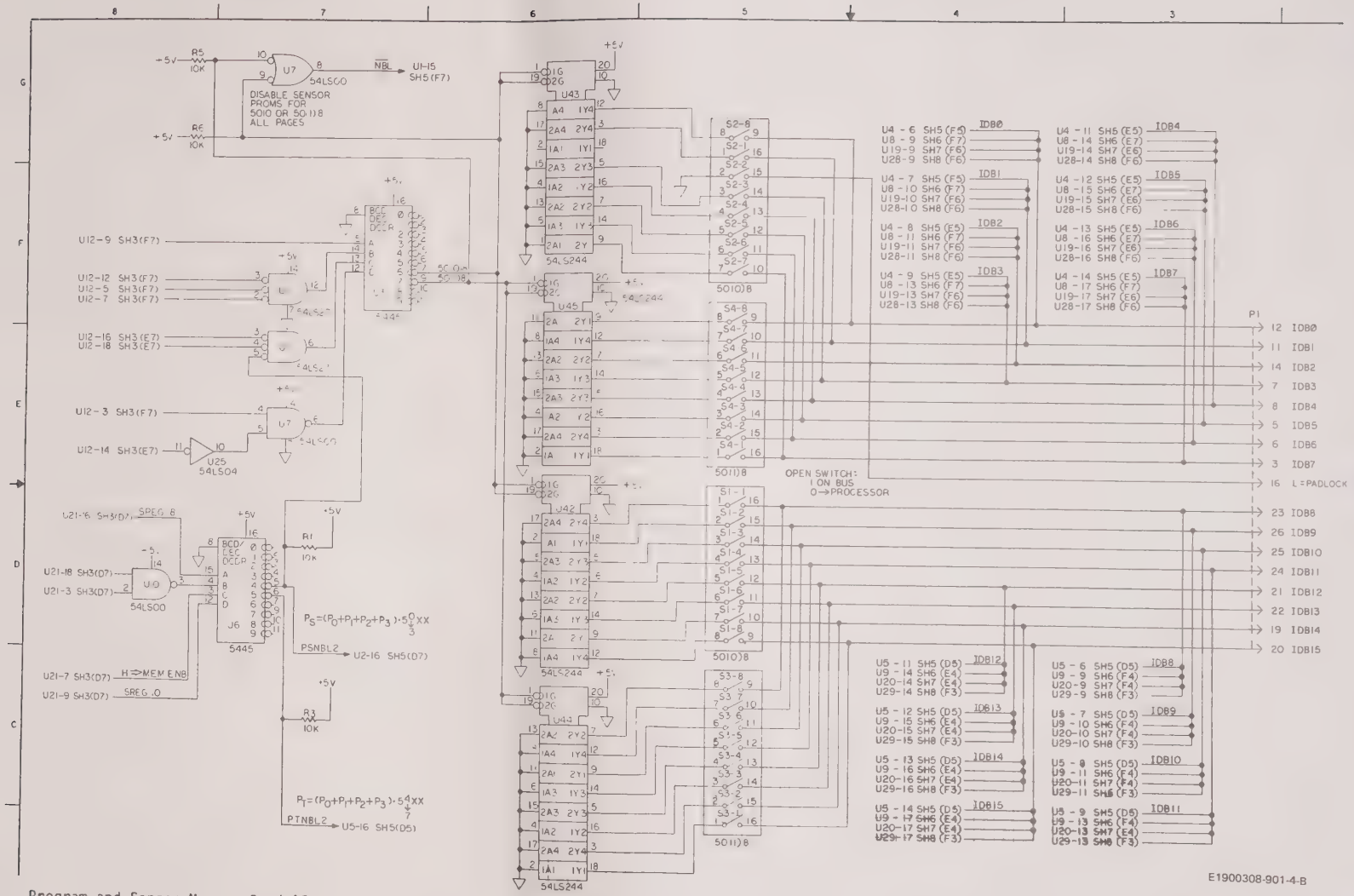

Program and Sensor Memory Card A6 Schematic
Figure 4-43 (Sheet 4)

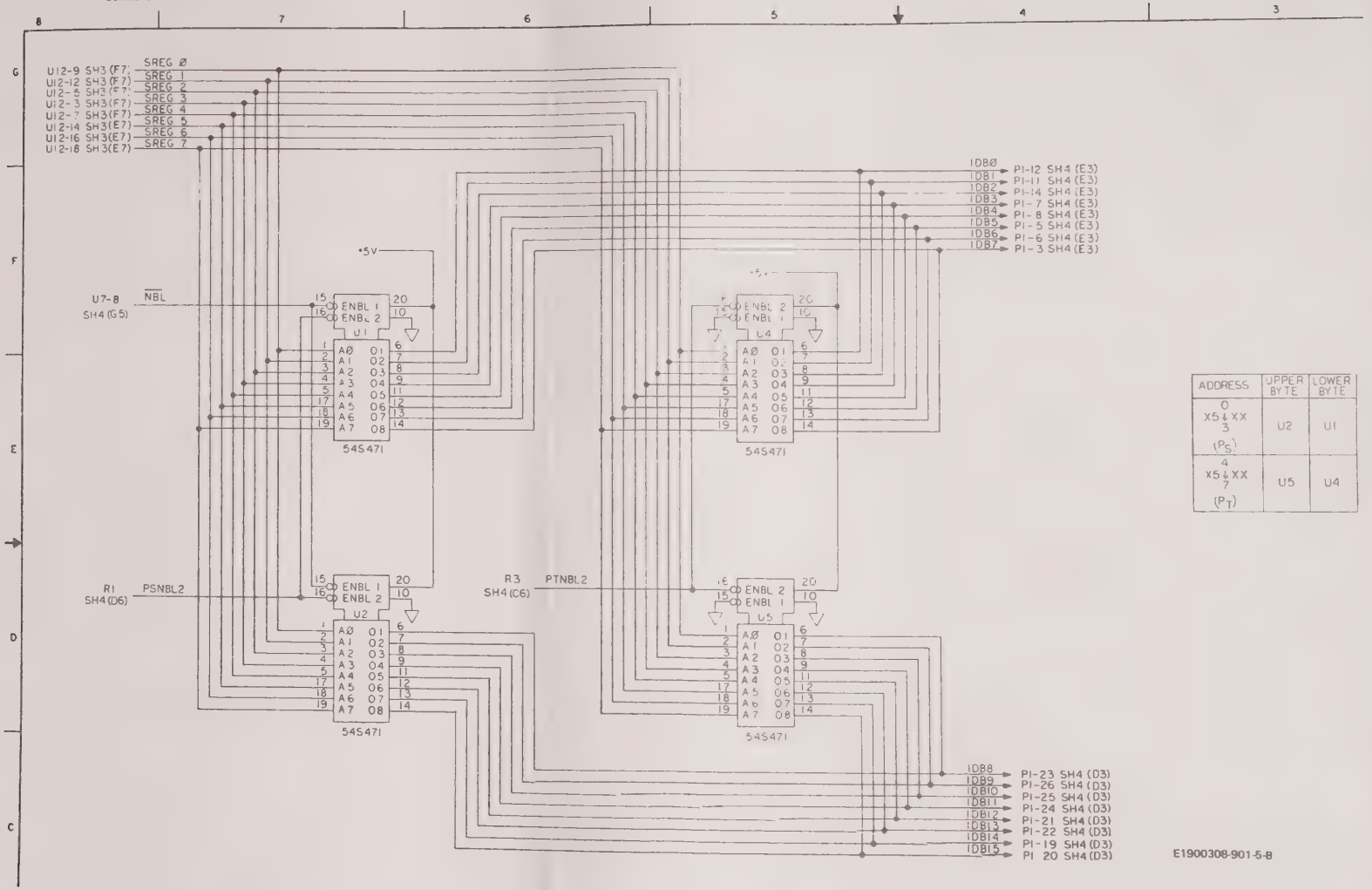

Program and Sensor Memory Card A6 Schematic
Figure 4-43 (Sheet 5)

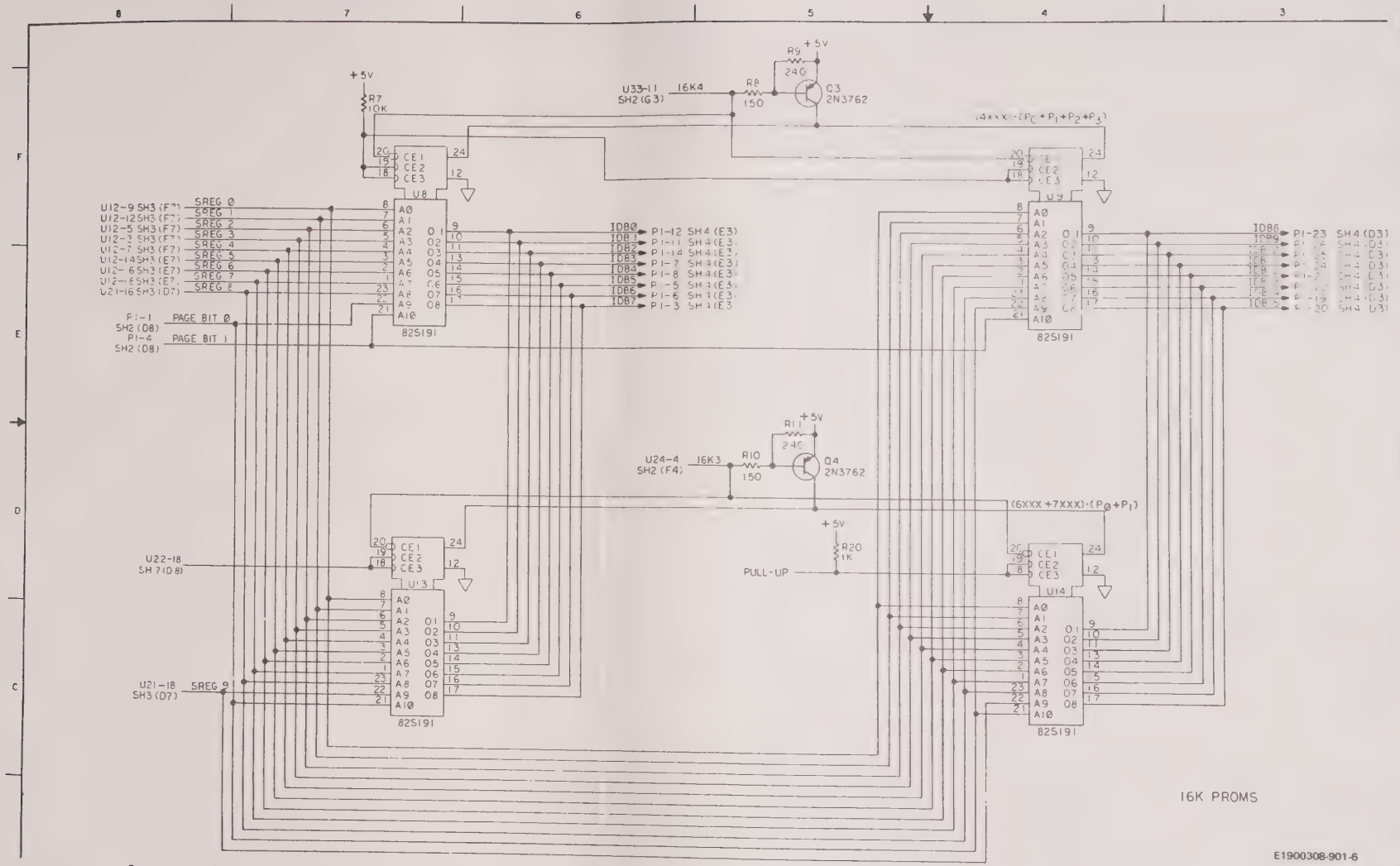

Program and Sensor Memory Card A6 Schematic
Figure 4-43 (Sheet 6)

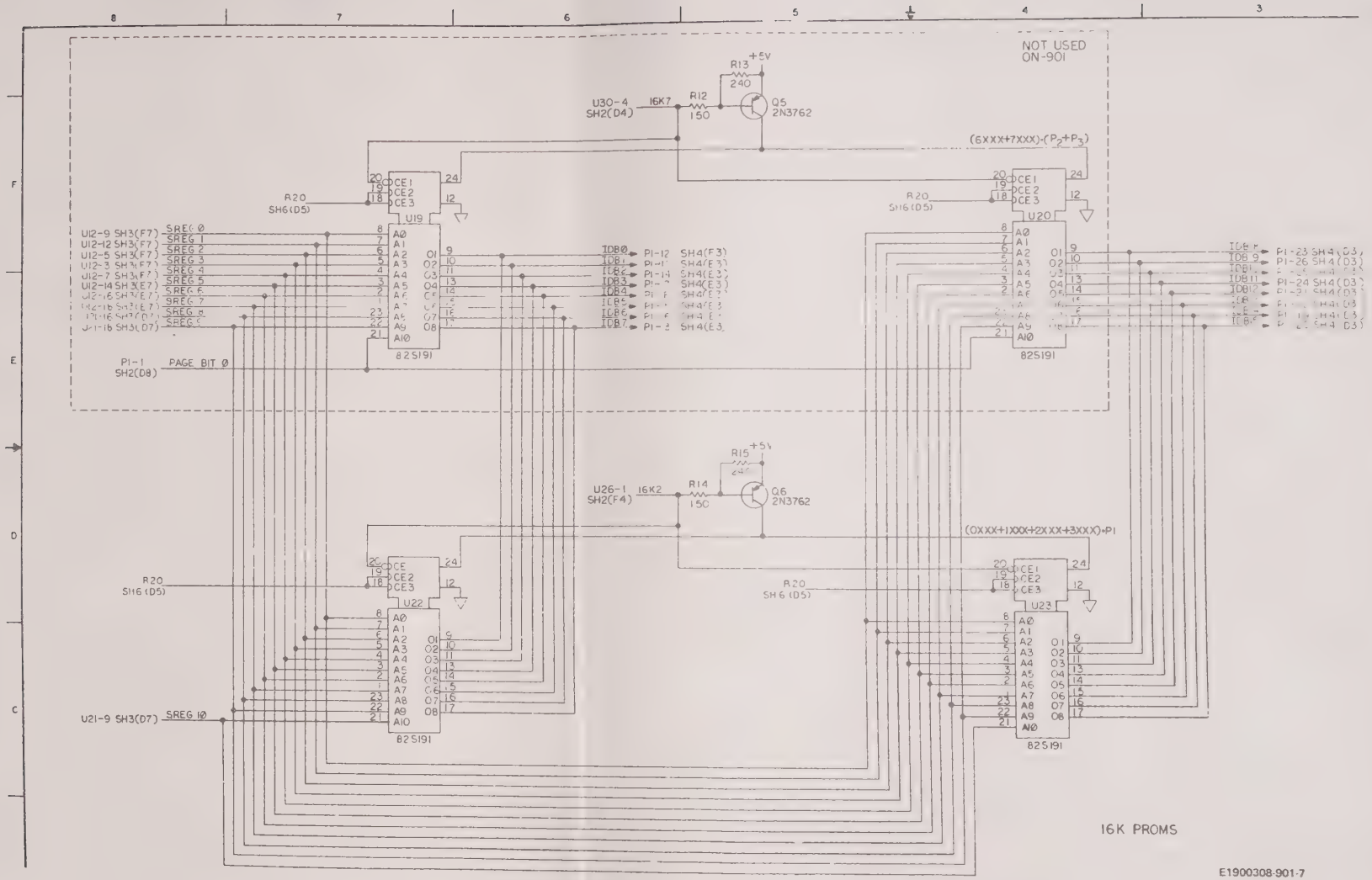

Program and Sensor Memory Card A6 Schematic
Figure 4-43 (Sheet 7)

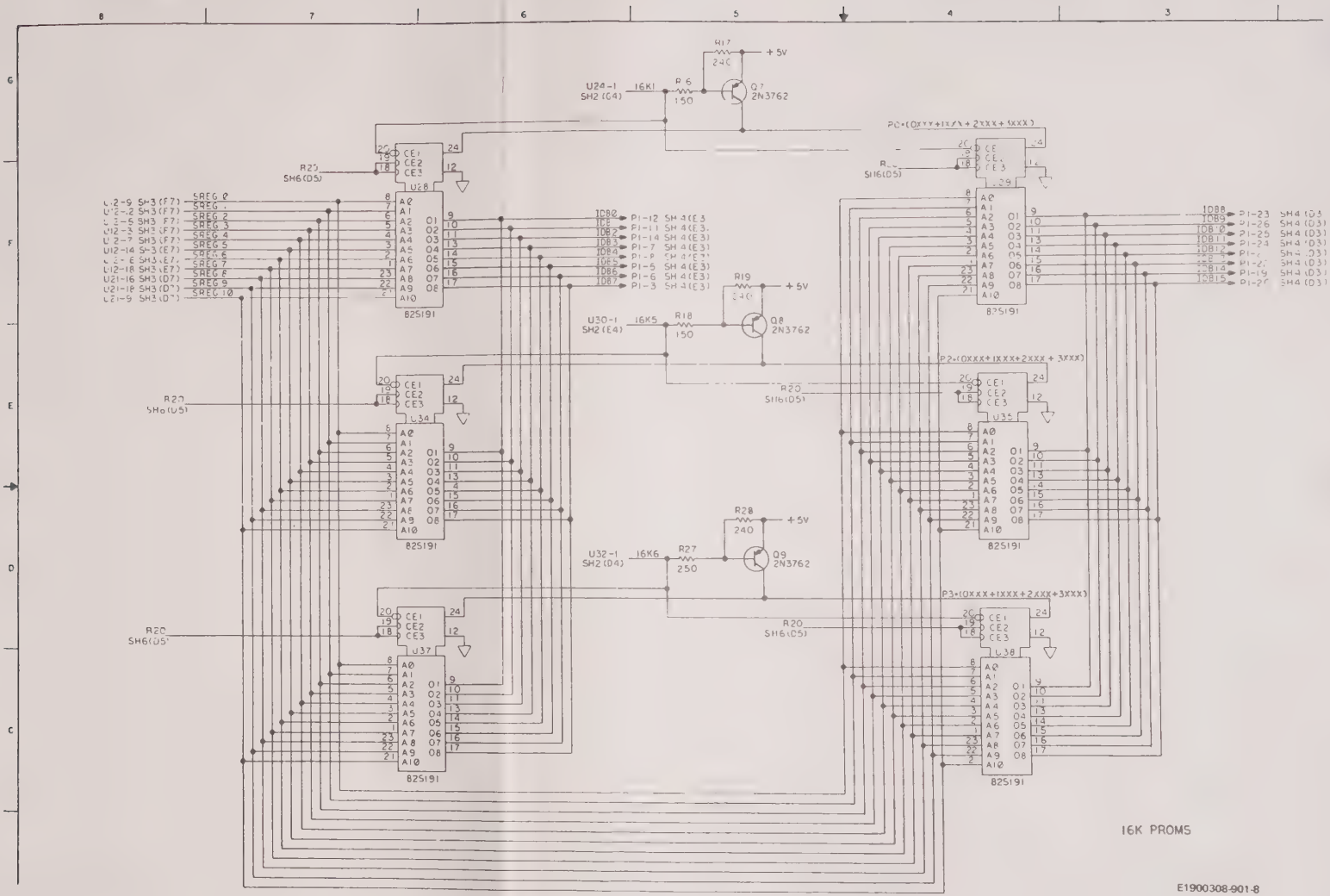

Program and Sensor Memory Card A6 Schematic
Figure 4-43 (Sheet 8)

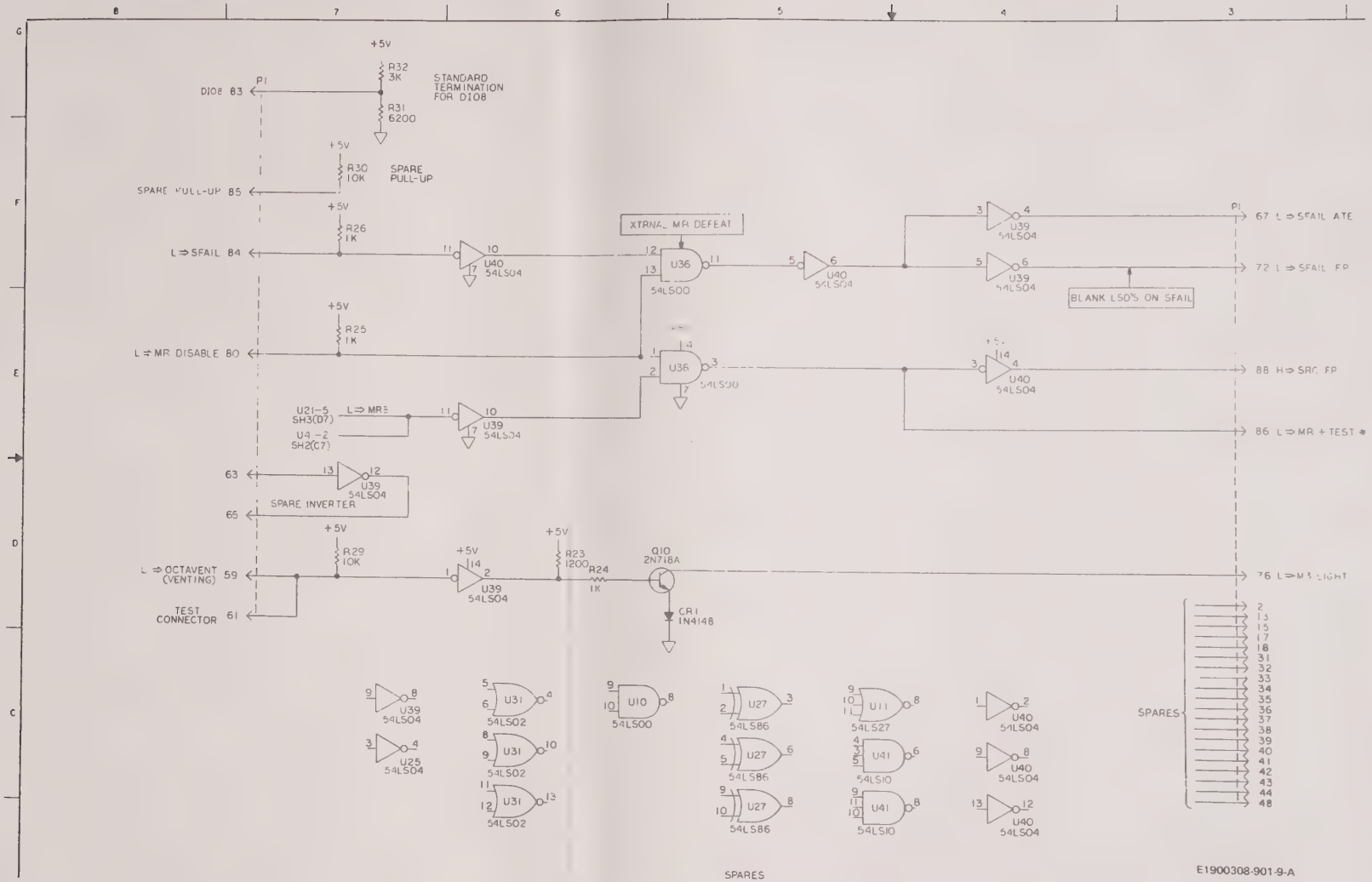

Program and Sensor Memory Card A6 Schematic
Figure 4-43 (Sheet 9)

Revision Index (Arrow Designation)	Revision Description	Effectivity

Control, D/A, and CAD Card A7 Schematic
Figure 4-44 (Sheet 1 of 5)

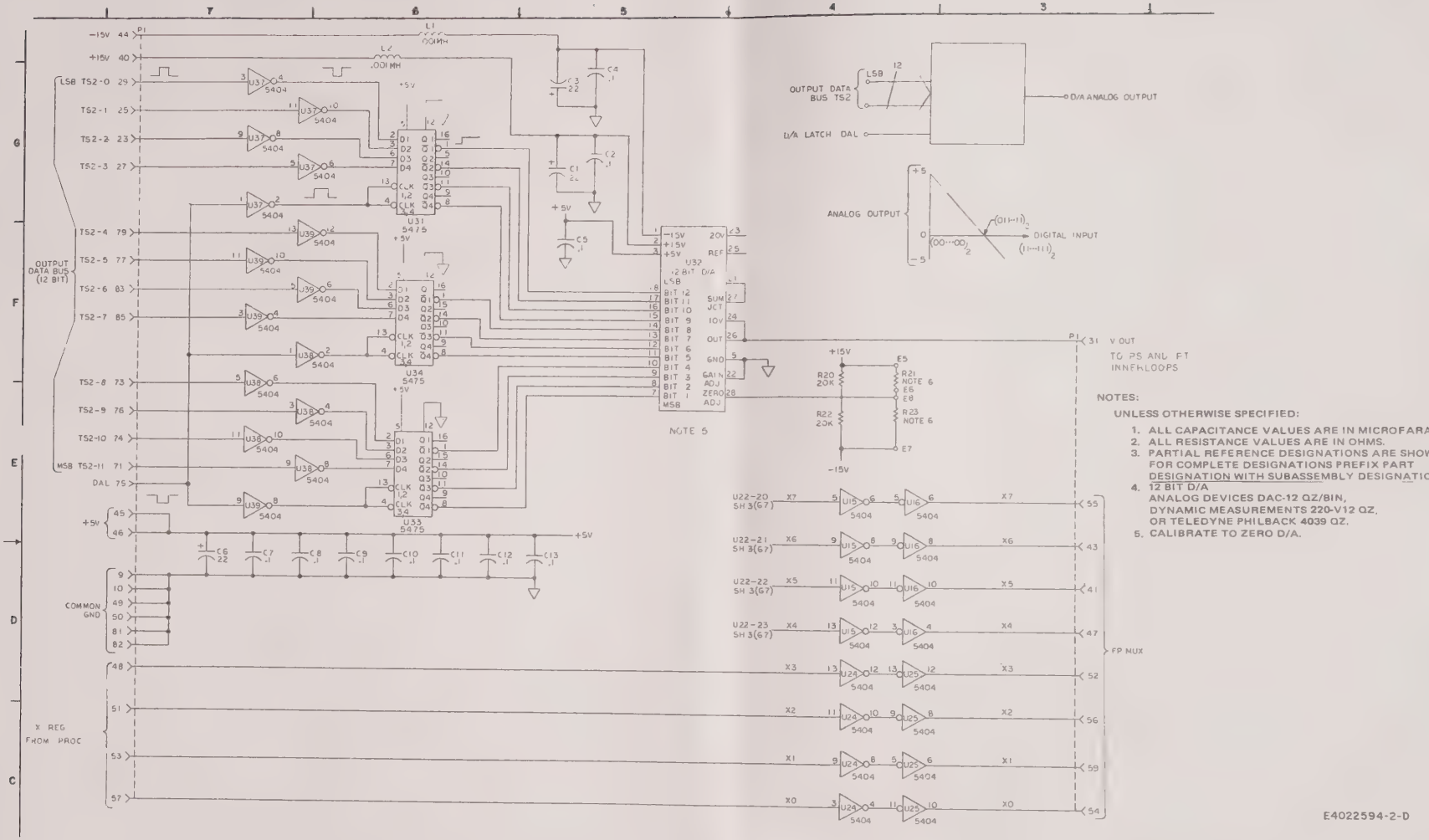

NOTES:

UNLESS OTHERWISE SPECIFIED:

1. ALL CAPACITANCE VALUES ARE IN MICROFARADS.
2. ALL RESISTANCE VALUES ARE IN OHMS.
3. PARTIAL REFERENCE DESIGNATIONS ARE SHOWN; FOR COMPLETE DESIGNATIONS PREFIX PART DESIGNATION WITH SUBASSEMBLY DESIGNATION.
4. 12 BIT D/A
   ANALOG DEVICES DAC-12 QZ/BIN,
   DYNAMIC MEASUREMENTS 220-V12 QZ,
   OR TELEDYNE PHILBACK 4039 QZ.
5. CALIBRATE TO ZERO D/A.

E4022594-2-D

Control, D/A, and CAD Card A7 Schematic
Figure 4-44 (Sheet 2)

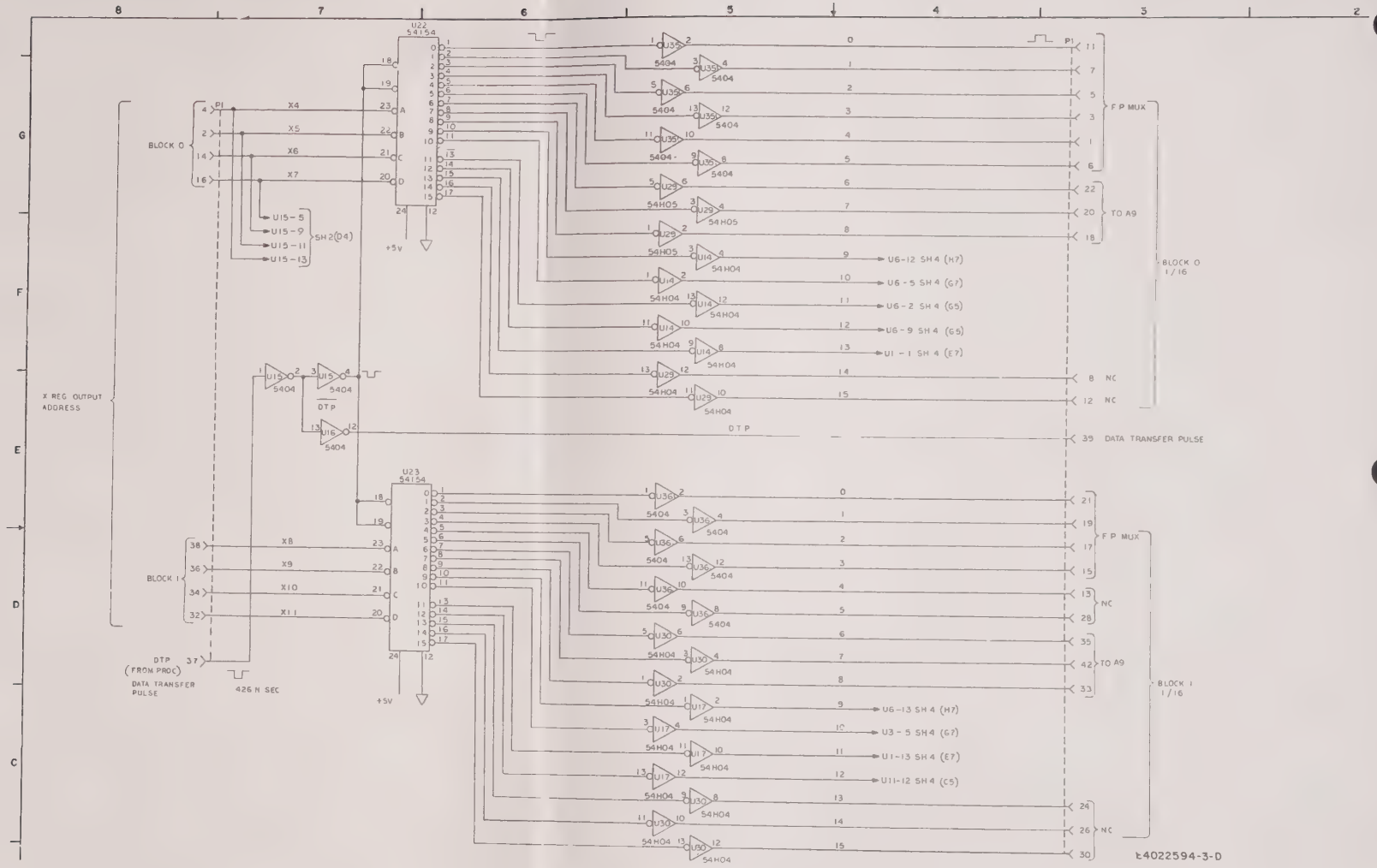

Control, D/A, and CAD Card A7 Schematic
Figure 4-44 (Sheet 3)

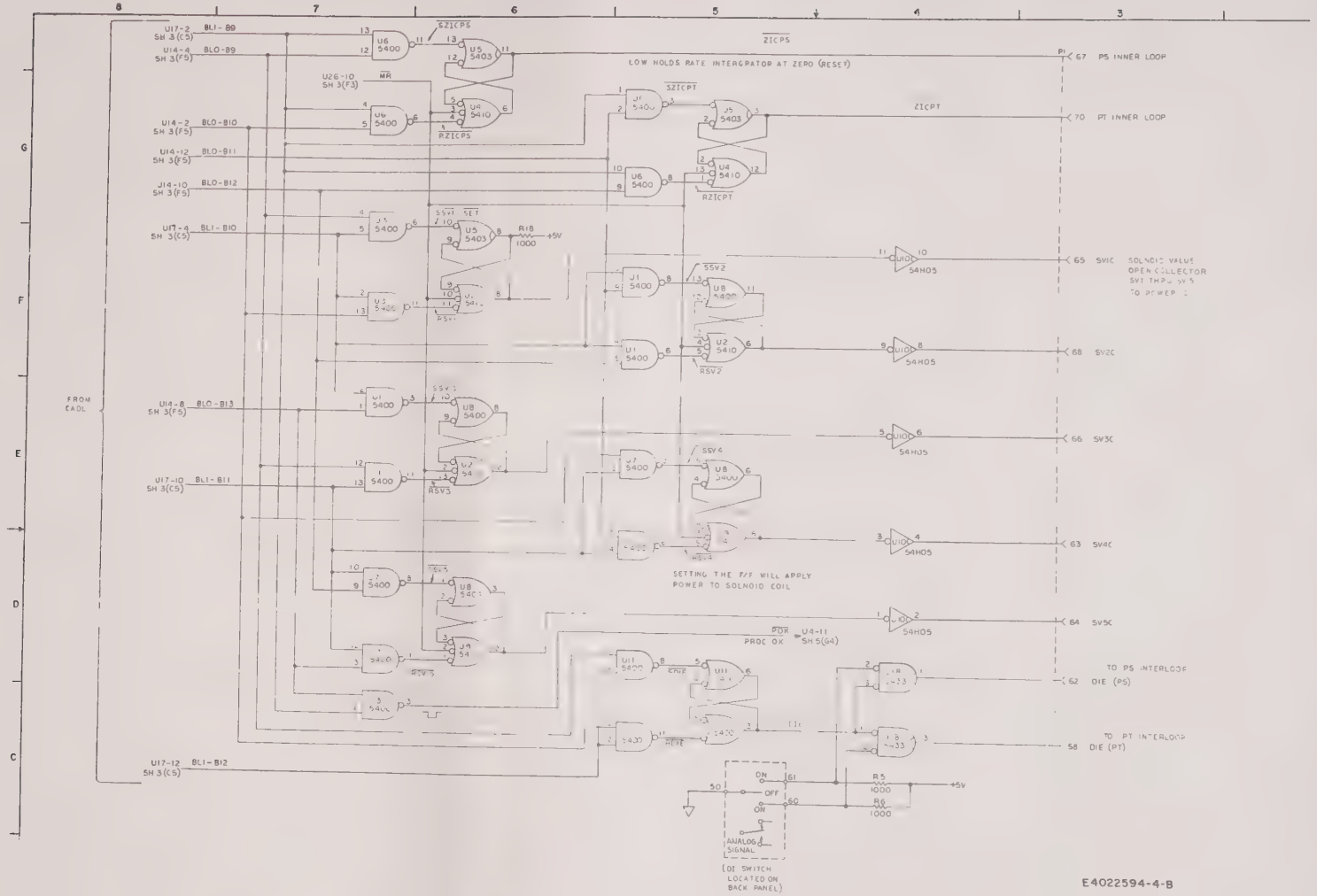

Control, D/A, and CAD Card A7 Schematic
Figure 4-44 (Sheet 4)

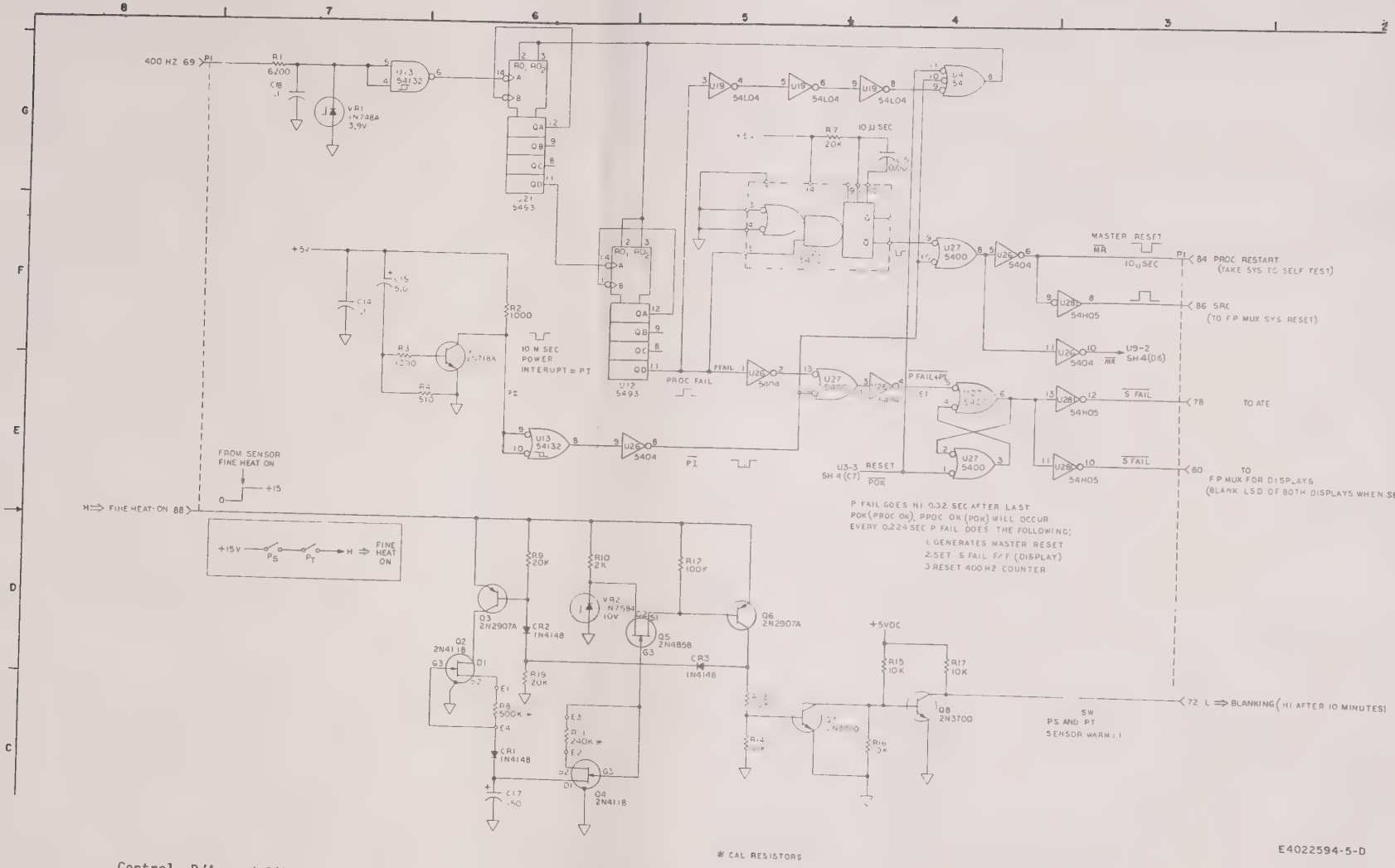

Control, D/A, and CAD Card A7 Schematic
Figure 4-44 (Sheet 5)

Revision Index (Arrow Designation)	Revision Designation	Effectivity

Scratch Pad/Calibration Memory Card A8 Schematic
Figure 4-45 (Sheet 1 of 12)

Sheet 2 intentionally left blank.

Scratch Pad/Calibration Memory Card A8 Schematic
Figure 4-45 (Sheet 2)

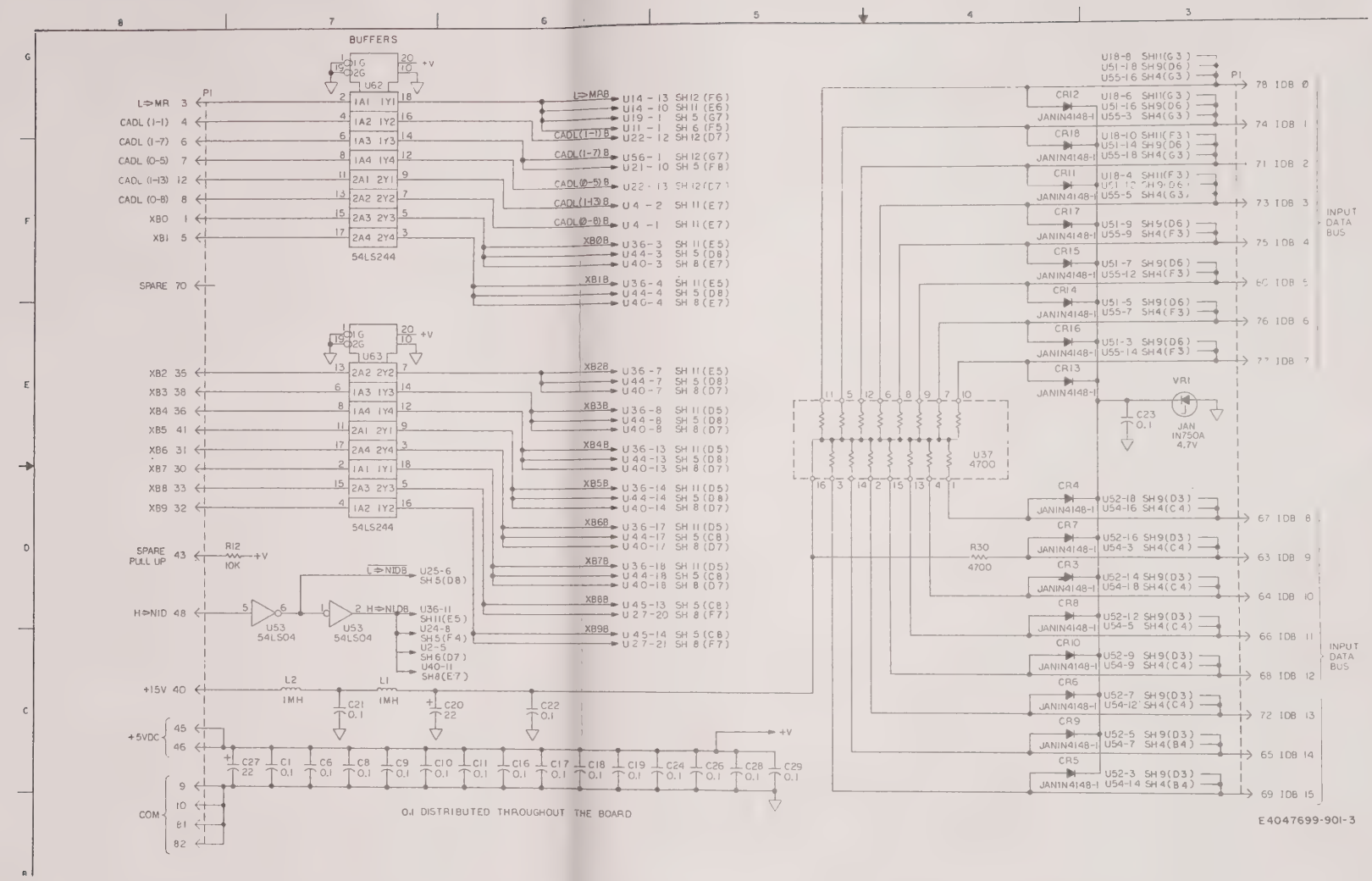

Scratch Pad/Calibration Memory Card A8 Schematic
Figure 4-45 (Sheet 3)

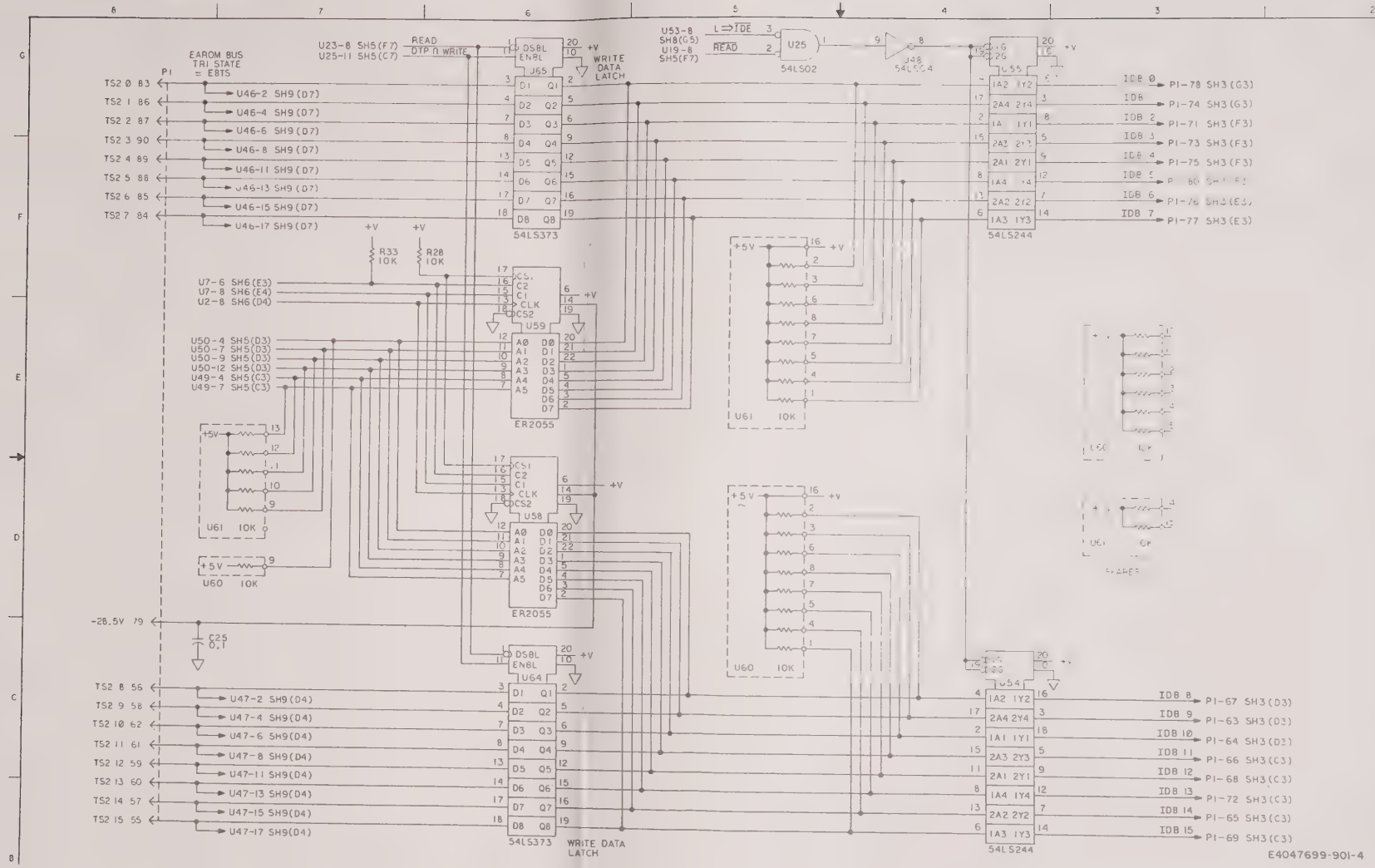

Scratch Pad/Calibration Memory Card A8 Schematic
Figure 4-45 (Sheet 4)

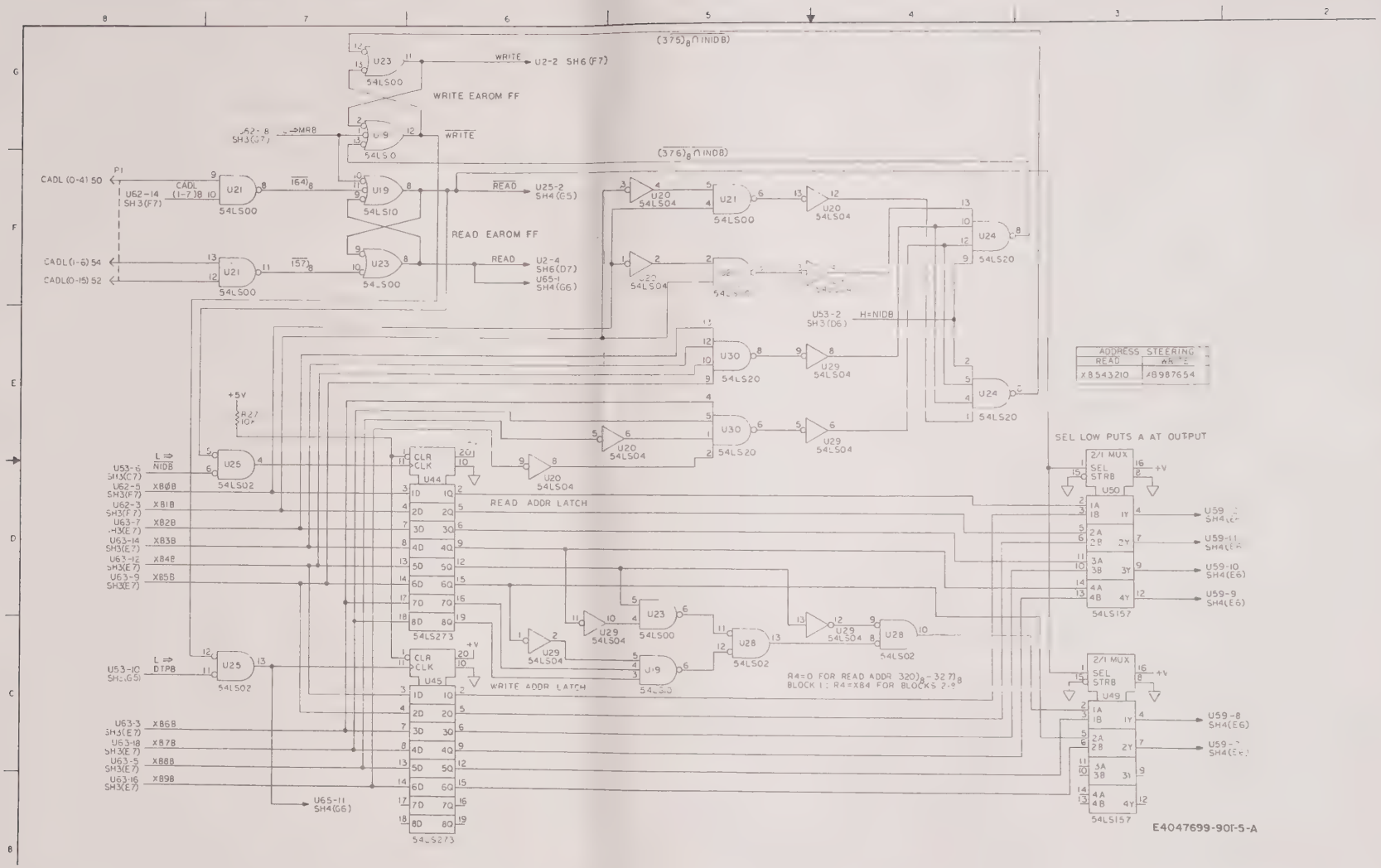

Scratch Pad/Calibration Memory Card A8 Schematic
Figure 4-45 (Sheet 5)

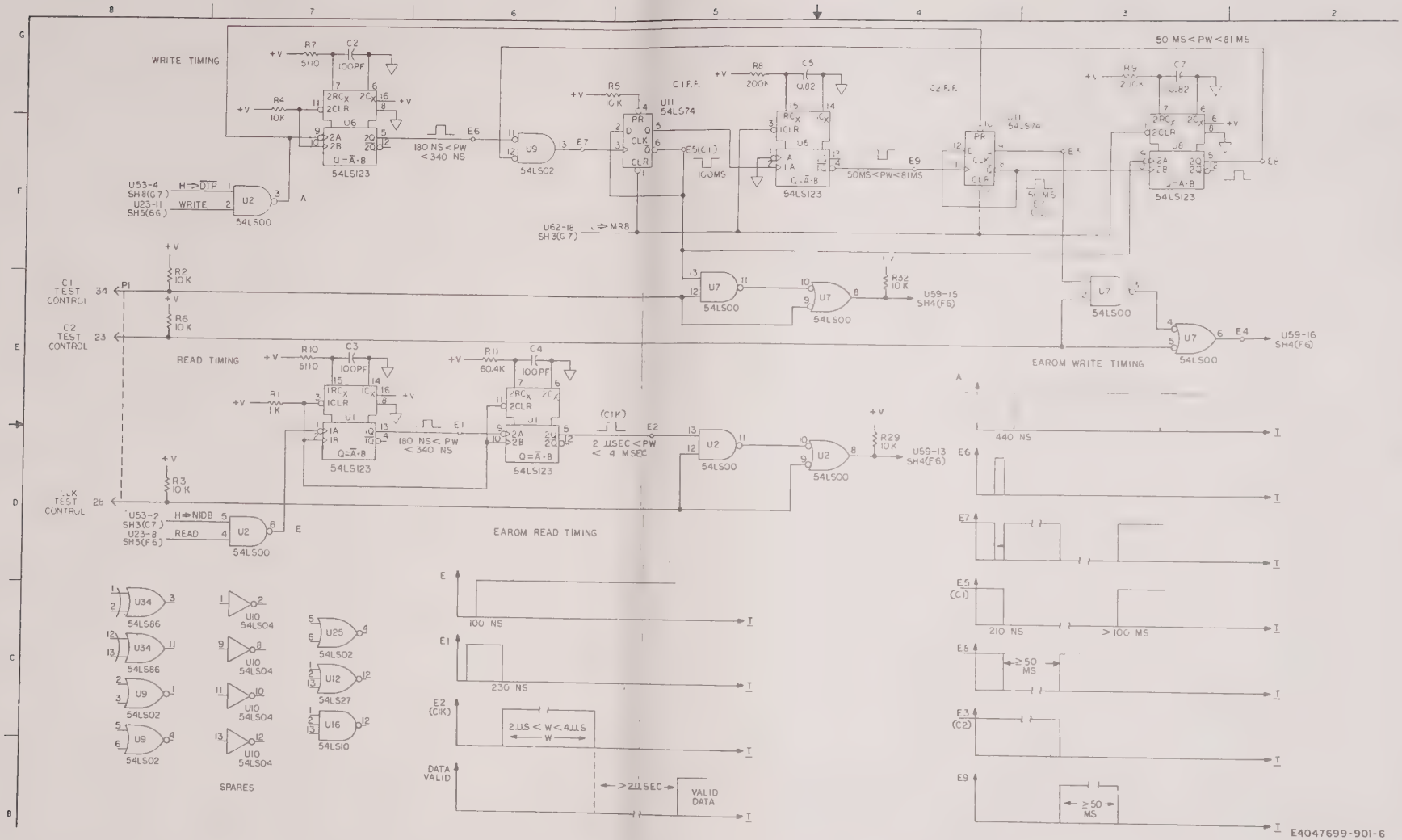

Scratch Pad/Calibration Memory Card A8 Schematic
Figure 4-45 (Sheet 6)

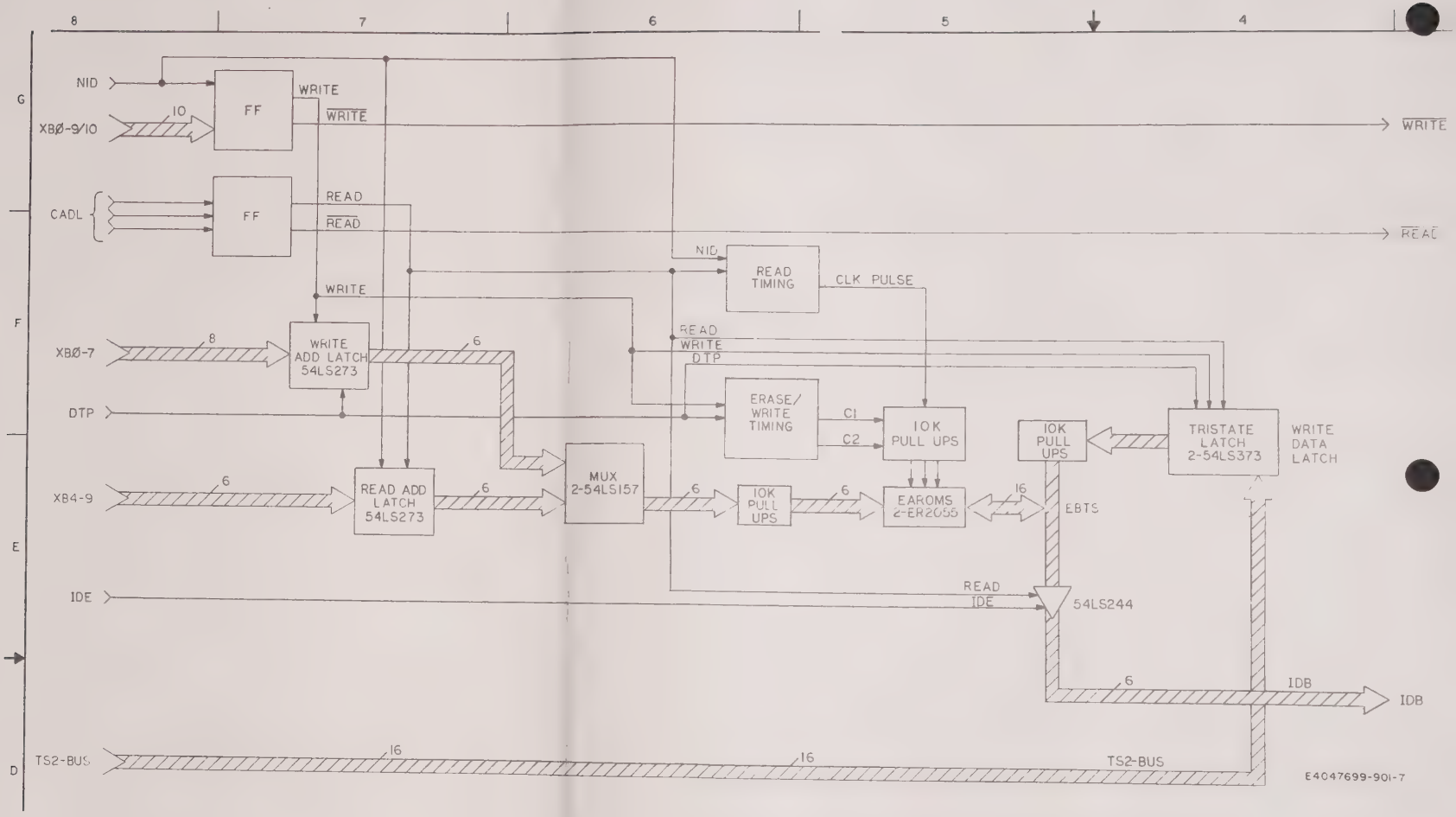

Scratch Pad/Calibration Memory Card A8 Schematic
Figure 4-45 (Sheet 7)

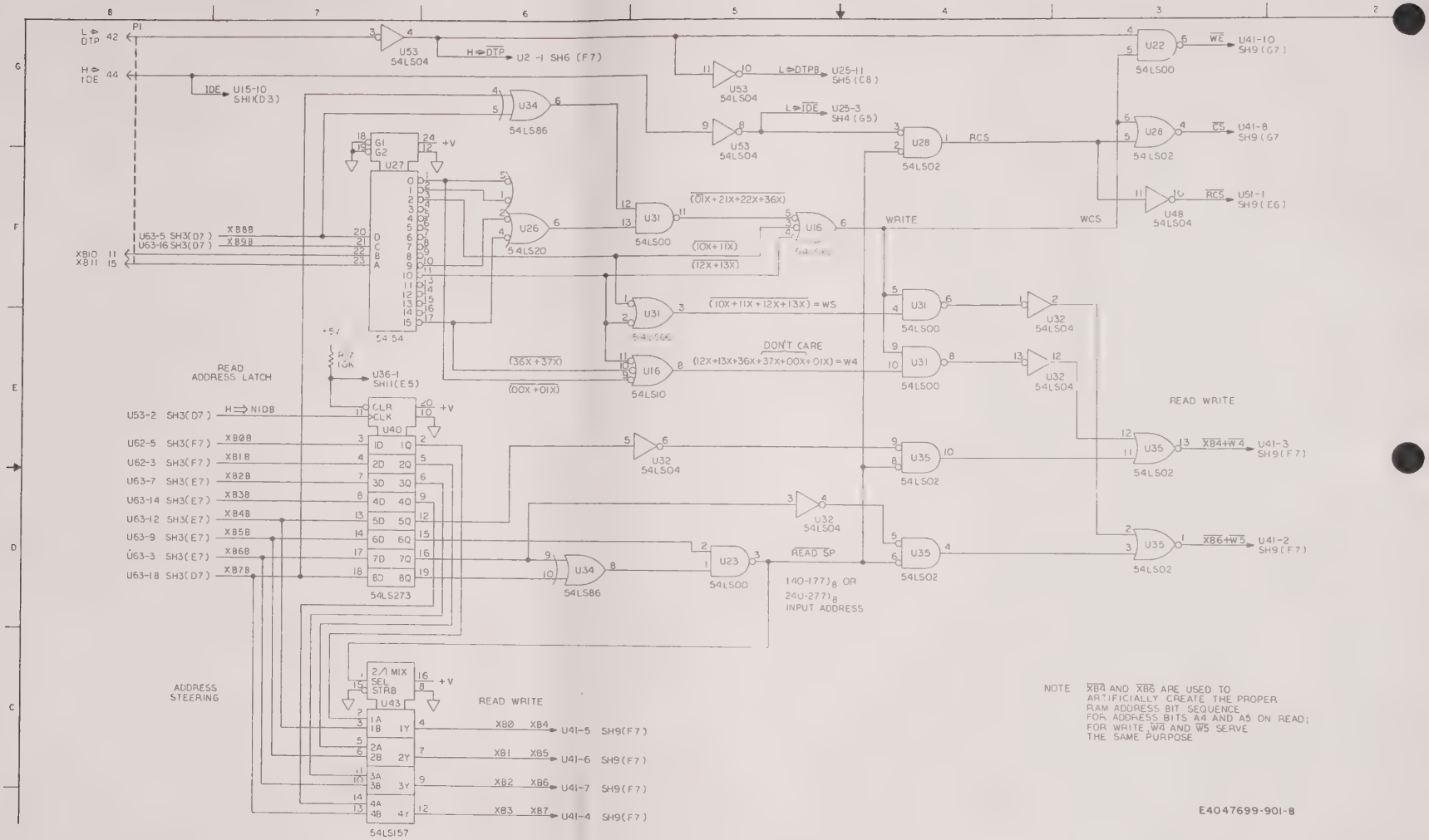

Scratch Pad/Calibration Memory Card A8 Schematic
Figure 4-45 (Sheet 8)

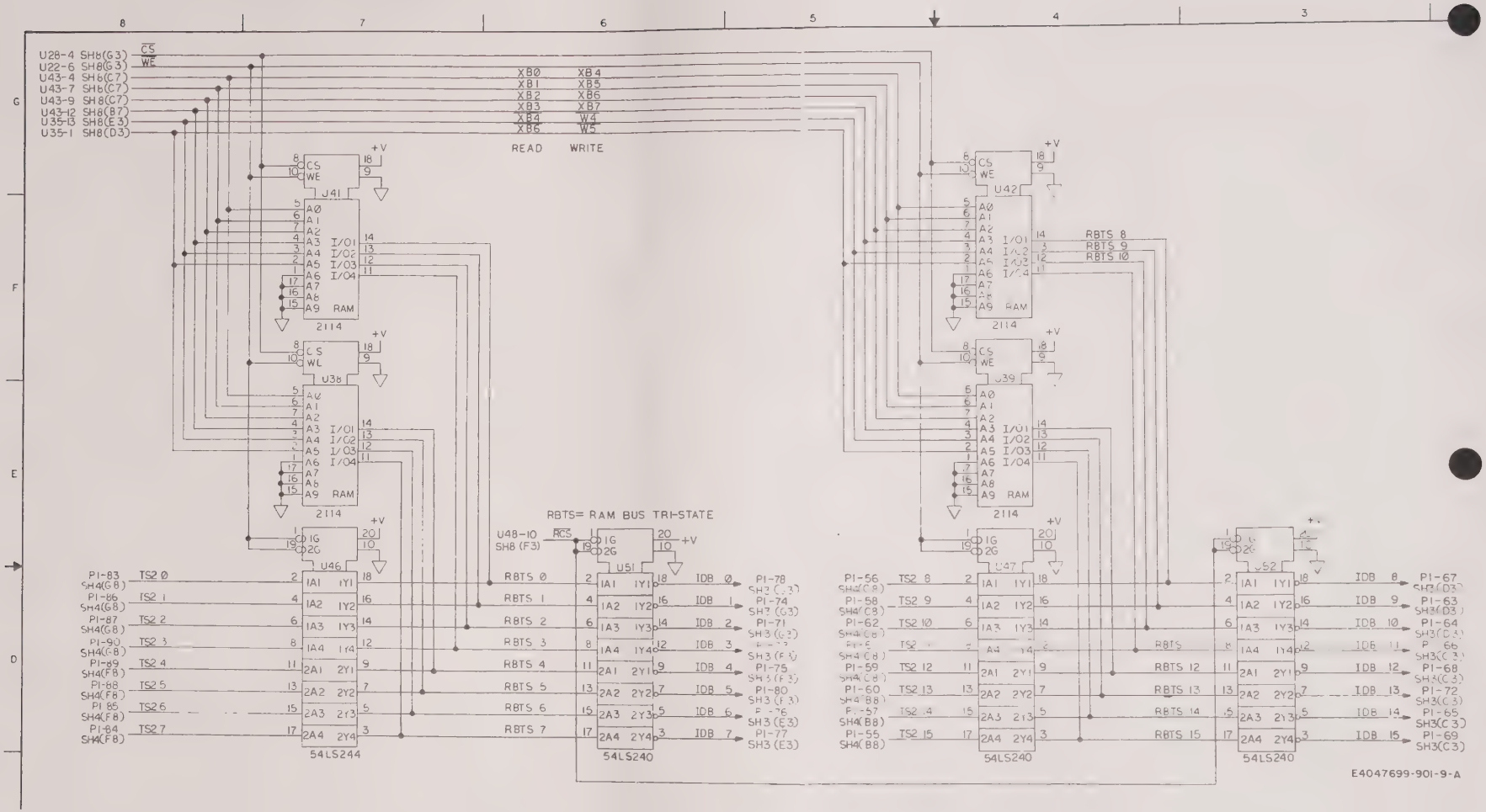

Scratch Pad/Calibration Memory Card A8 Schematic
Figure 4-45 (Sheet 9)

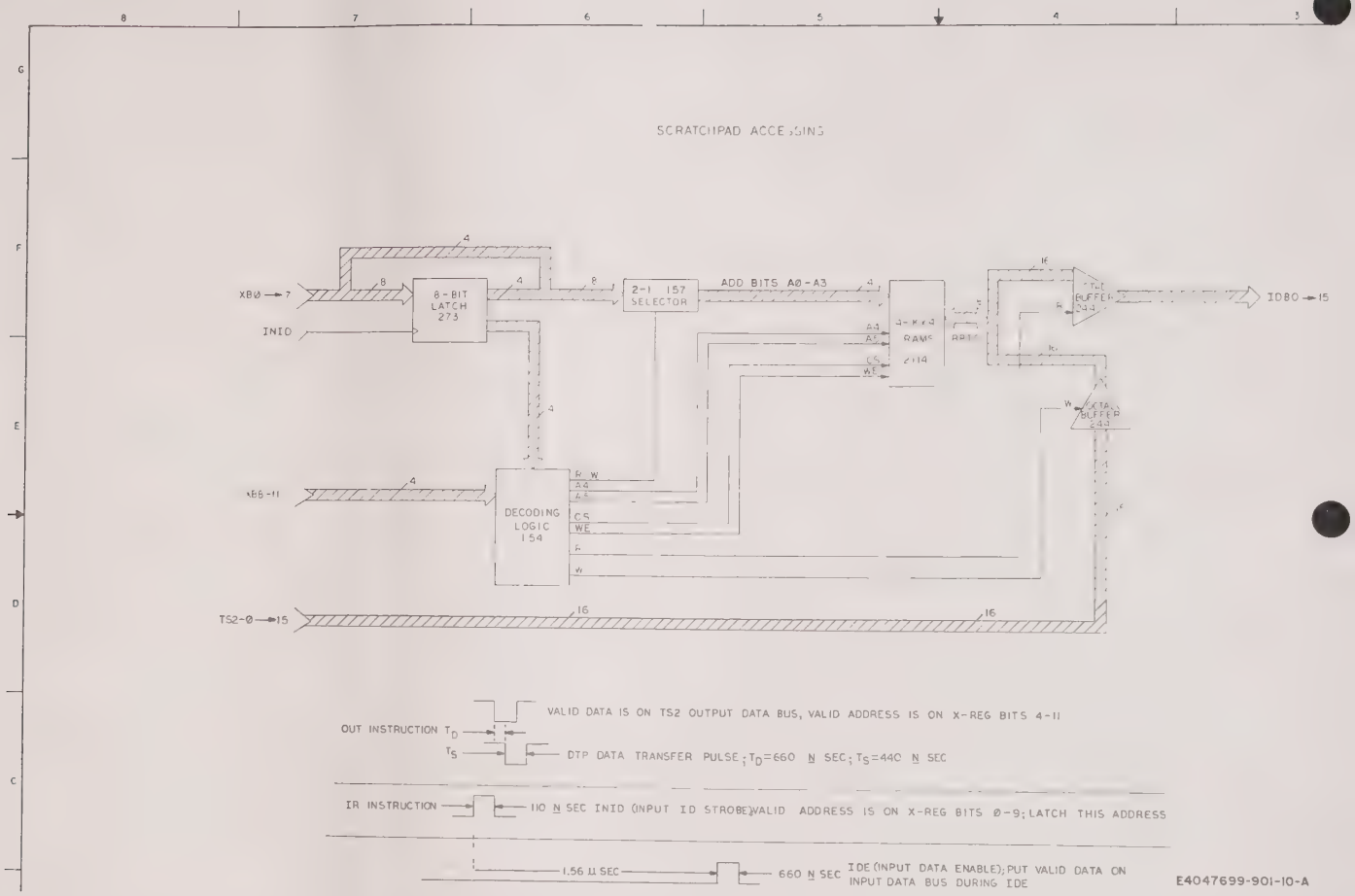

Scratch Pad/Calibration Memory Card A8 Schematic
Figure 4-45 (Sheet 10)

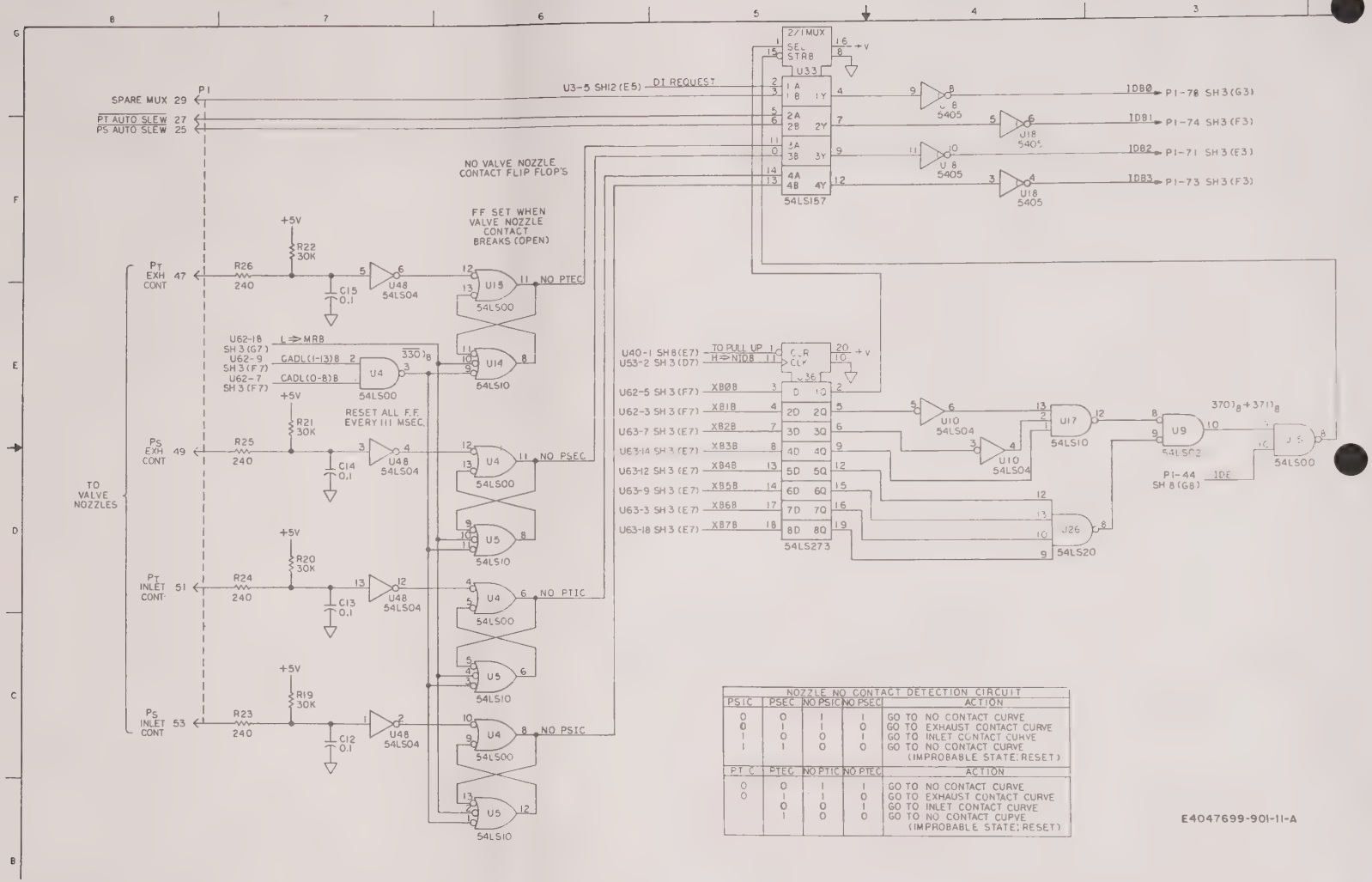

NOZZLE NO CONTACT DETECTION CIRCUIT				
PSIC	PSEC	NO PSIC	NO PSEC	ACTION
0	0	1	1	GO TO NO CONTACT CURVE
0	1	1	0	GO TO EXHAUST CONTACT CURVE
1	0	0	1	GO TO INLET CONTACT CURVE
1	1	0	0	GO TO NO CONTACT CURVE (IMPROBABLE STATE; RESET)

PT C	PTEC	NO PTIC	NO PTEC	ACTION
0	0	1	1	GO TO NO CONTACT CURVE
0	1	1	0	GO TO EXHAUST CONTACT CURVE
	0	0	1	GO TO INLET CONTACT CURVE
	1	0	0	GO TO NO CONTACT CUPVE (IMPROBABLE STATE; RESET)

E4047699-901-11-A

Scratch Pad/Calibration Memory Card A8 Schematic
Figure 4-45 (Sheet 11)

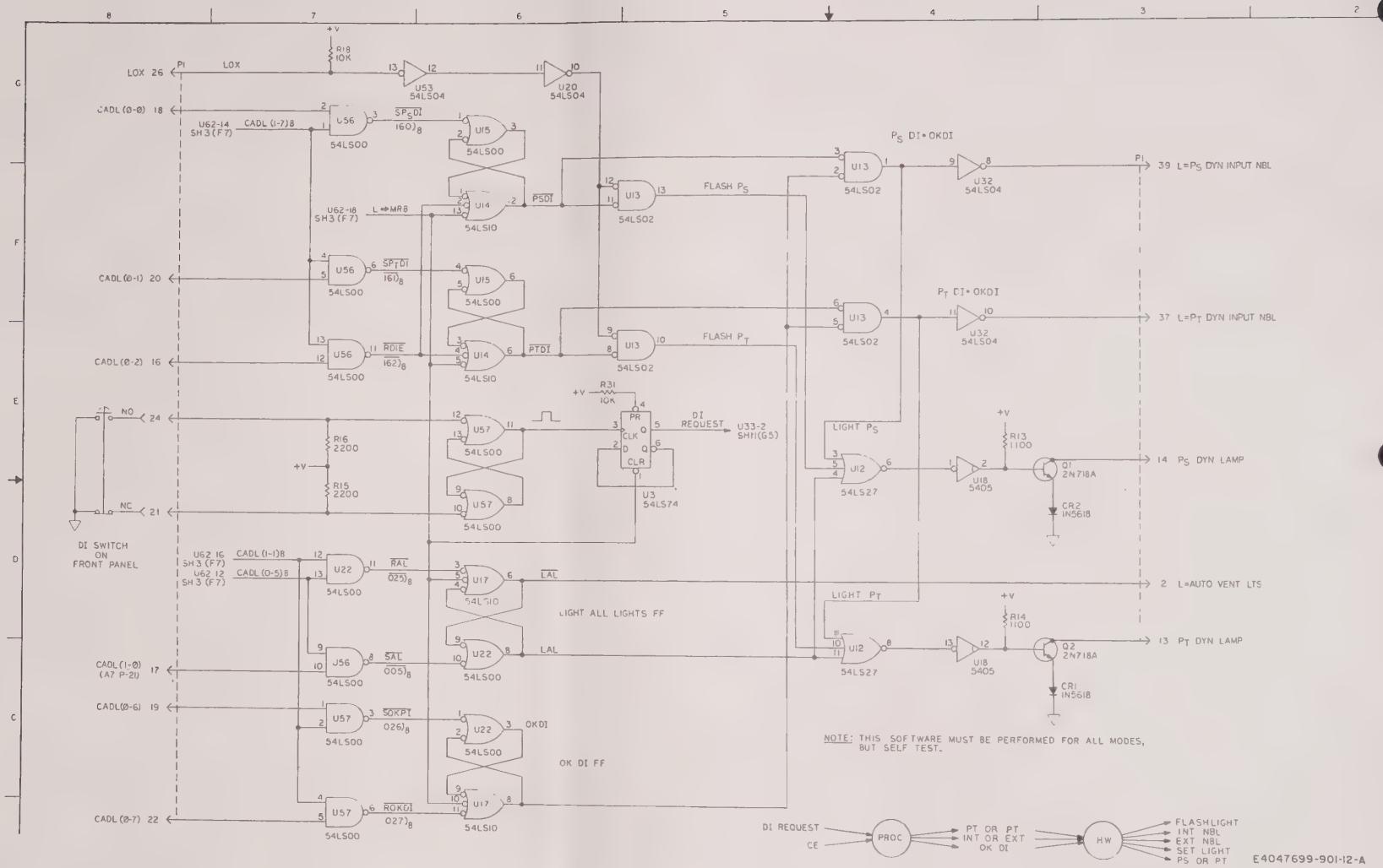

Scratch Pad/Calibration Memory Card A8 Schematic
Figure 4-45 (Sheet 12)

Revision Index (Arrow Designation)	Revision Description	Effectivity

Clock and F/C Card A9 Schematic
Figure 4-46 (Sheet 1 of 5)

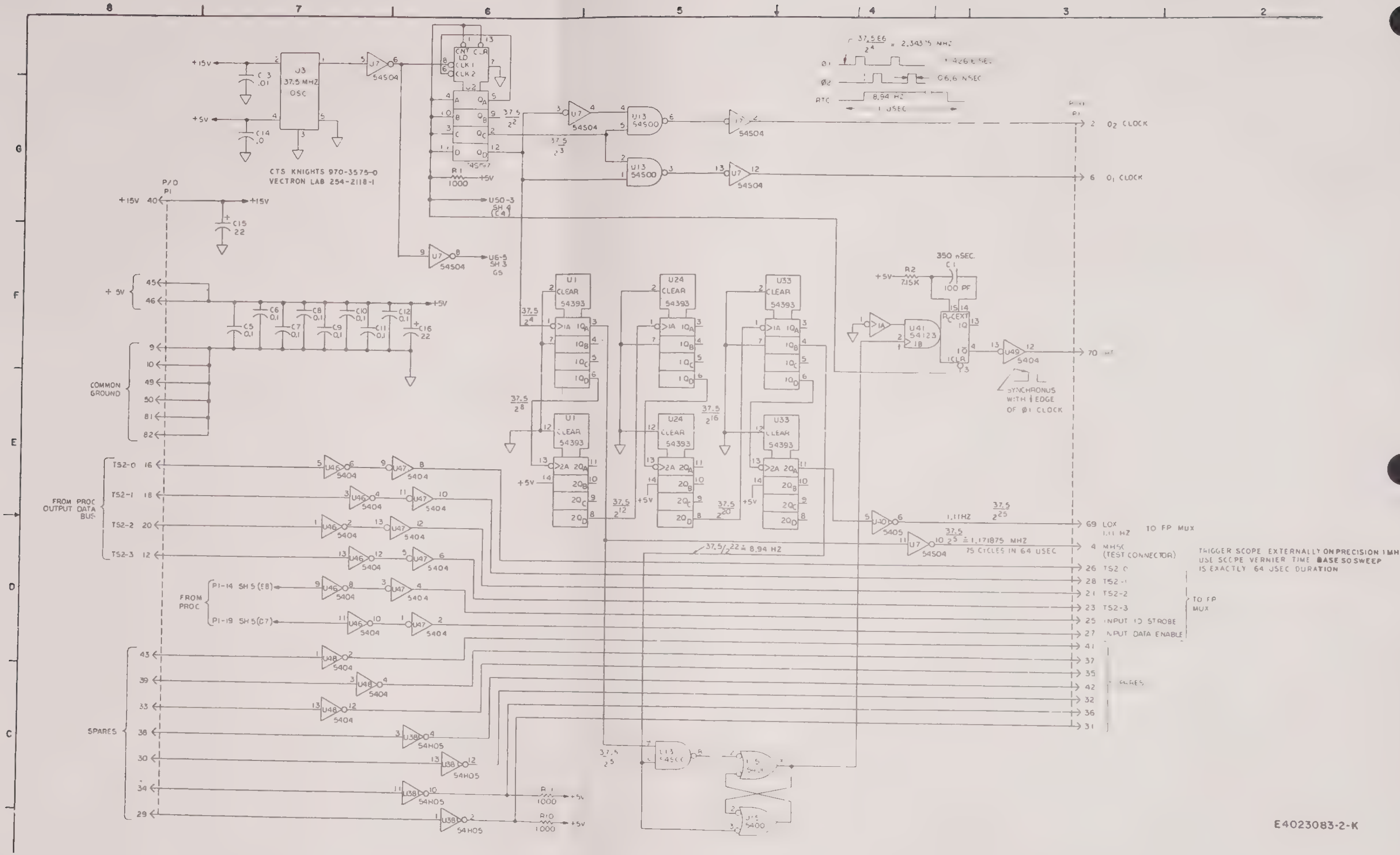

Clock and F/C Card A9 Schematic
Figure 4-46 (Sheet 2)

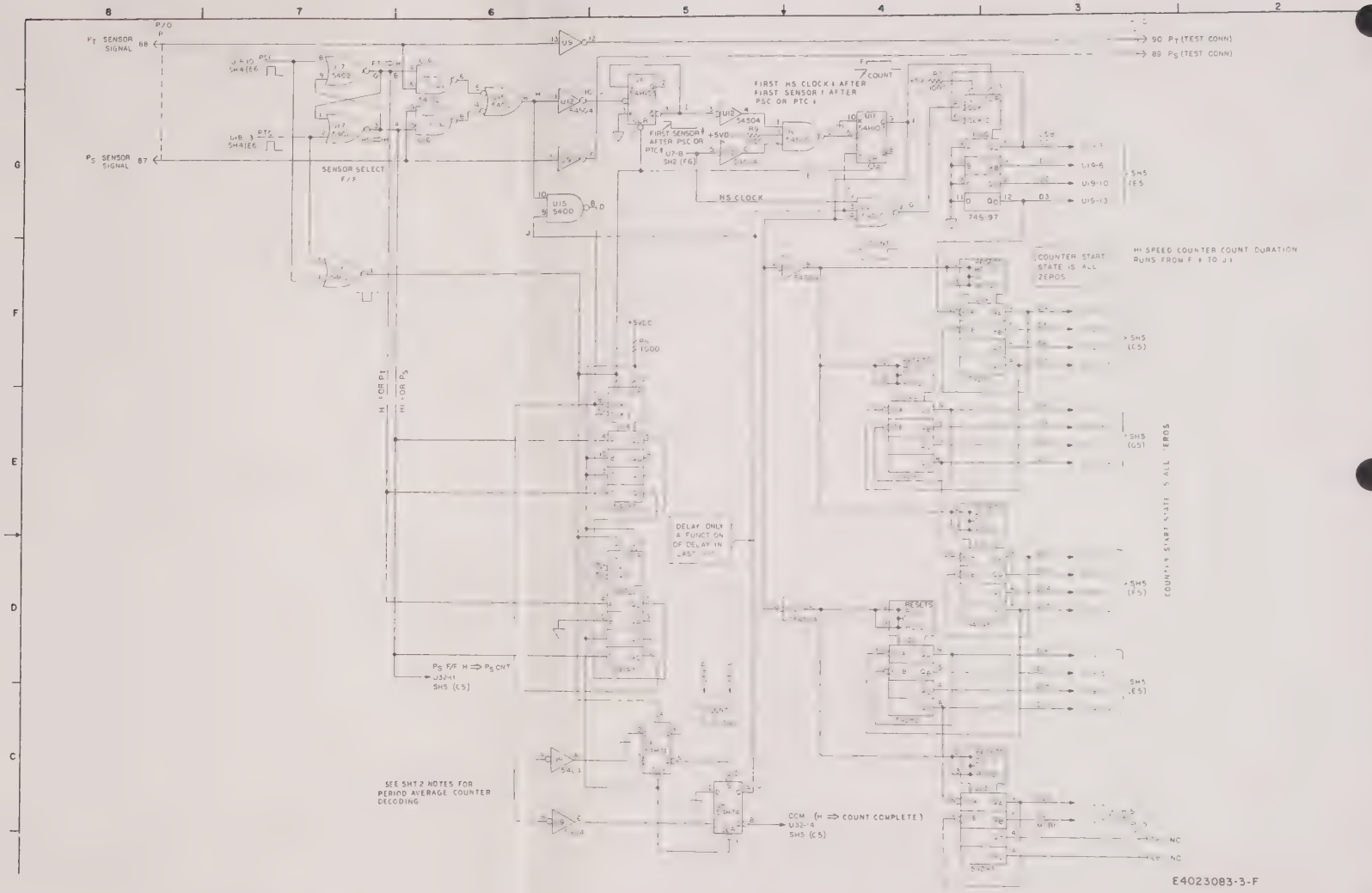

Clock and F/C Card A9 Schematic
Figure 4-46 (Sheet 3)

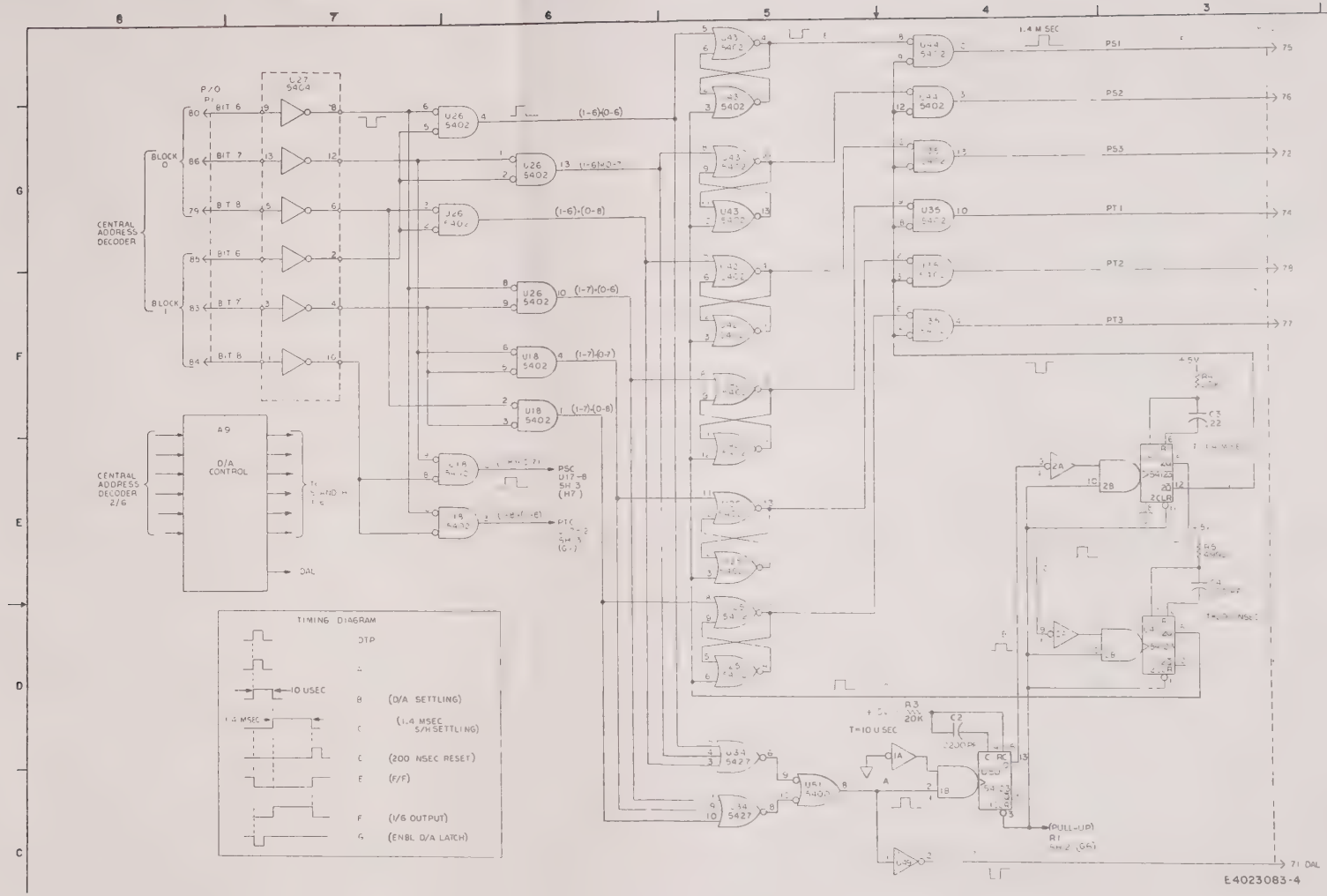

Clock and F/C Card A9 Schematic
Figure 4-46 (Sheet 4)

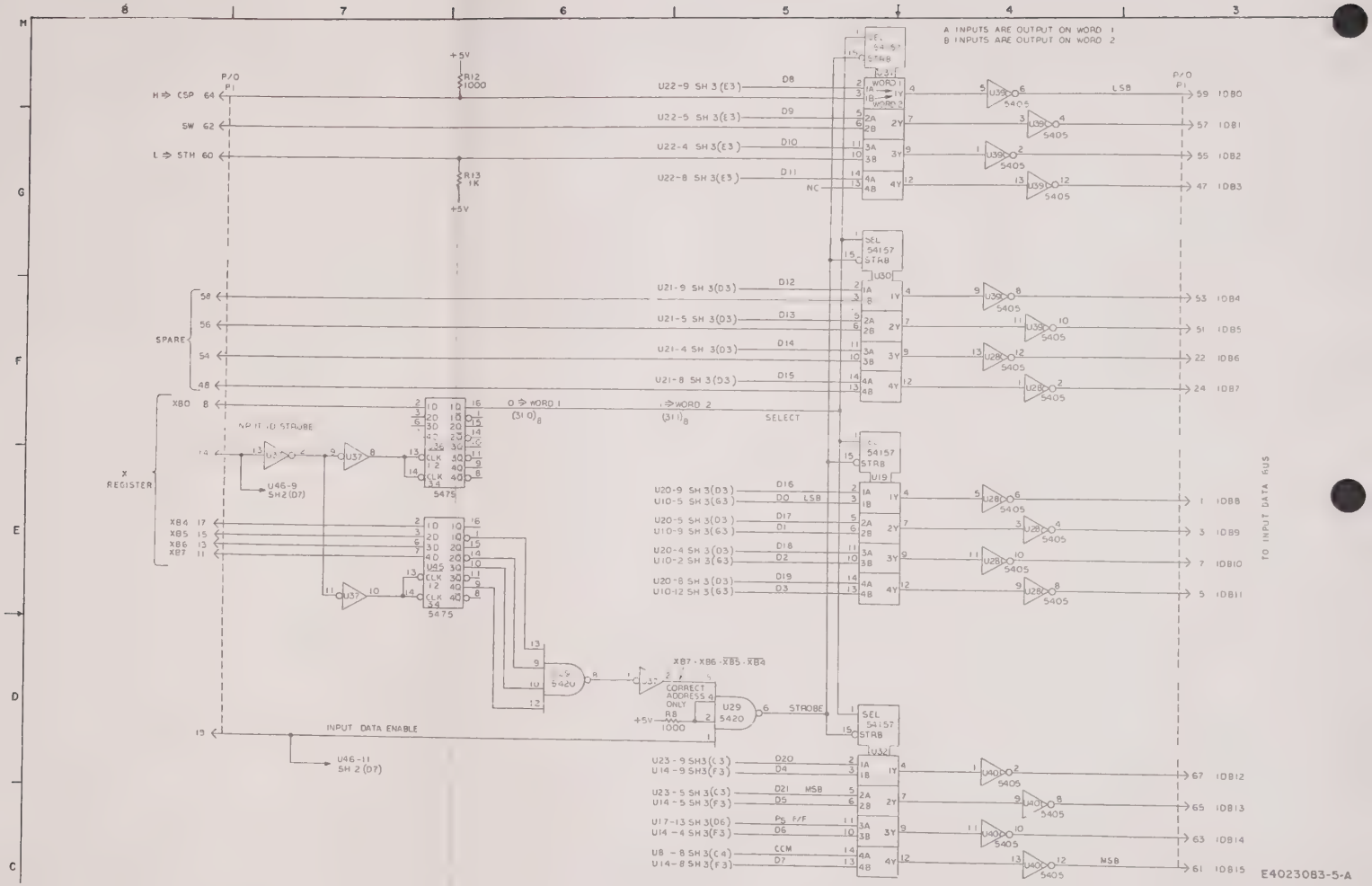

Clock and F/C Card A9 Schematic
Figure 4-46 (Sheet 5)

Revision Index (Arrow Designation)	Revision Description	Effectivity

P_t Inner Loop Card A12 Schematic
Figure 4-47 (Sheet 1 of 8)

Sheets 2 and 3 intentionally left blank.

Pt Inner Loop Card A12 Schematic
Figure 4-47 (Sheets 2 and 3)

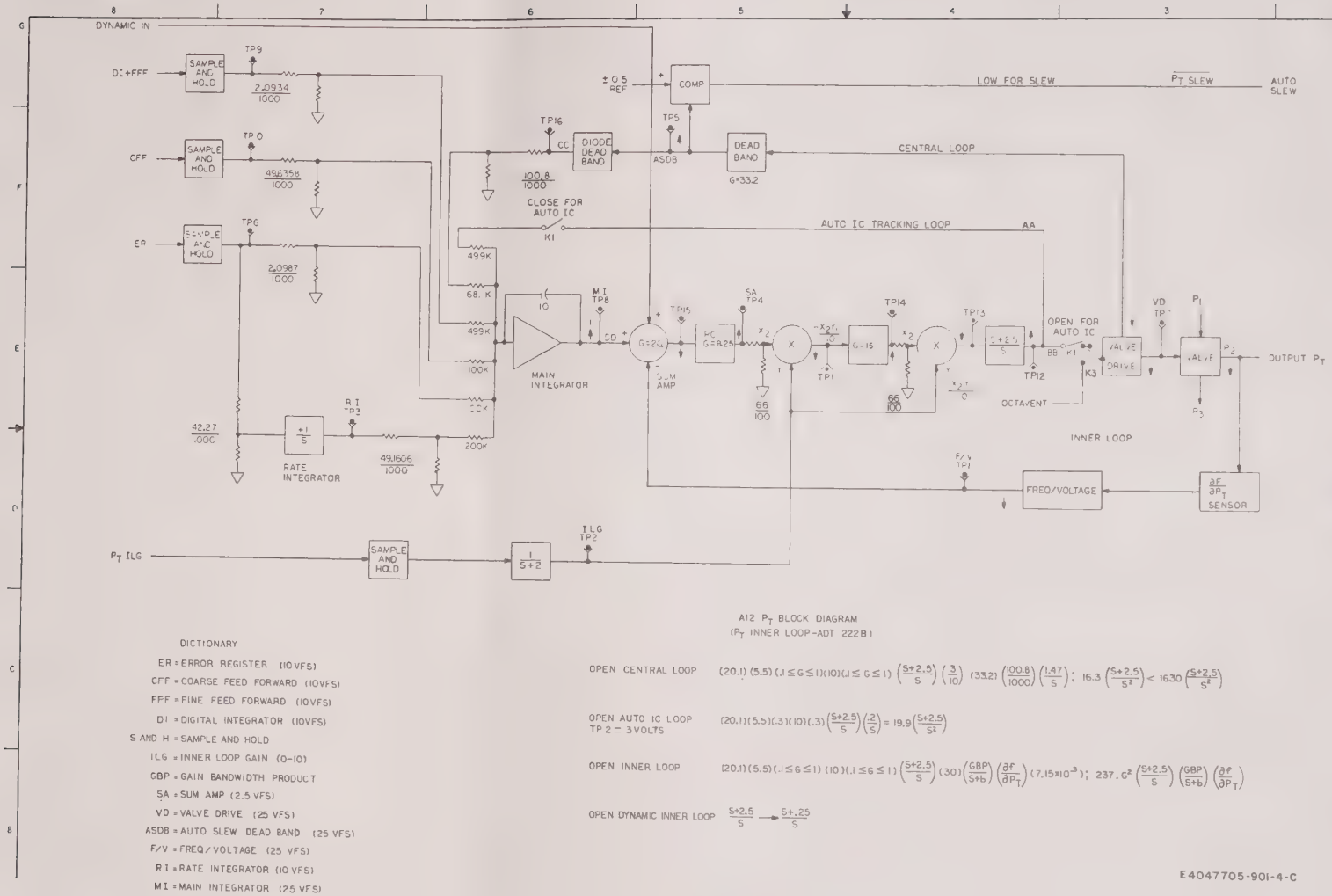

DICTIONARY

ER = ERROR REGISTER (10VFS)
CFF = COARSE FEED FORWARD (10VFS)
FFF = FINE FEED FORWARD (10VFS)
DI = DIGITAL INTEGRATOR (10VFS)
S AND H = SAMPLE AND HOLD
ILG = INNER LOOP GAIN (0-10)
GBP = GAIN BANDWIDTH PRODUCT
SA = SUM AMP (2.5 VFS)
VD = VALVE DRIVE (25 VFS)
ASDB = AUTO SLEW DEAD BAND (25 VFS)
F/V = FREQ/VOLTAGE (25 VFS)
RI = RATE INTEGRATOR (10 VFS)
MI = MAIN INTEGRATOR (25 VFS)

A12 P_T BLOCK DIAGRAM
(P_T INNER LOOP-ADT 222B)

OPEN CENTRAL LOOP $(20.1)(5.5)(.1 \le G \le 1)(10)(.1 \le G \le 1)\left(\frac{S+2.5}{S}\right)\left(\frac{3}{10}\right)(33.2)\left(\frac{100.8}{1000}\right)\left(\frac{1.47}{S}\right) = 16.3\left(\frac{S+2.5}{S^2}\right) < 16.30\left(\frac{S+2.5}{S^2}\right)$

OPEN AUTO IC LOOP TP 2 = 3 VOLTS $(20.1)(5.5)(.3)(10)(.3)\left(\frac{S+2.5}{S}\right)\left(\frac{2}{S}\right) = 19.9\left(\frac{S+2.5}{S^2}\right)$

OPEN INNER LOOP $(20.1)(5.5)(.1 \le G \le 1)(10)(.1 \le G \le 1)\left(\frac{S+2.5}{S}\right)(30)\left(\frac{GBP}{S+b}\right)\left(\frac{\partial f}{\partial P_T}\right)(7.15\times10^{-3}) = 237.6^2\left(\frac{S+2.5}{S}\right)\left(\frac{GBP}{S+b}\right)\left(\frac{\partial f}{\partial P_T}\right)$

OPEN DYNAMIC INNER LOOP $\frac{S+2.5}{S} \rightarrow \frac{S+.25}{S}$

E4047705-901-4-C

P_t Inner Loop Card A12 Schematic
Figure 4-47 (Sheet 4)

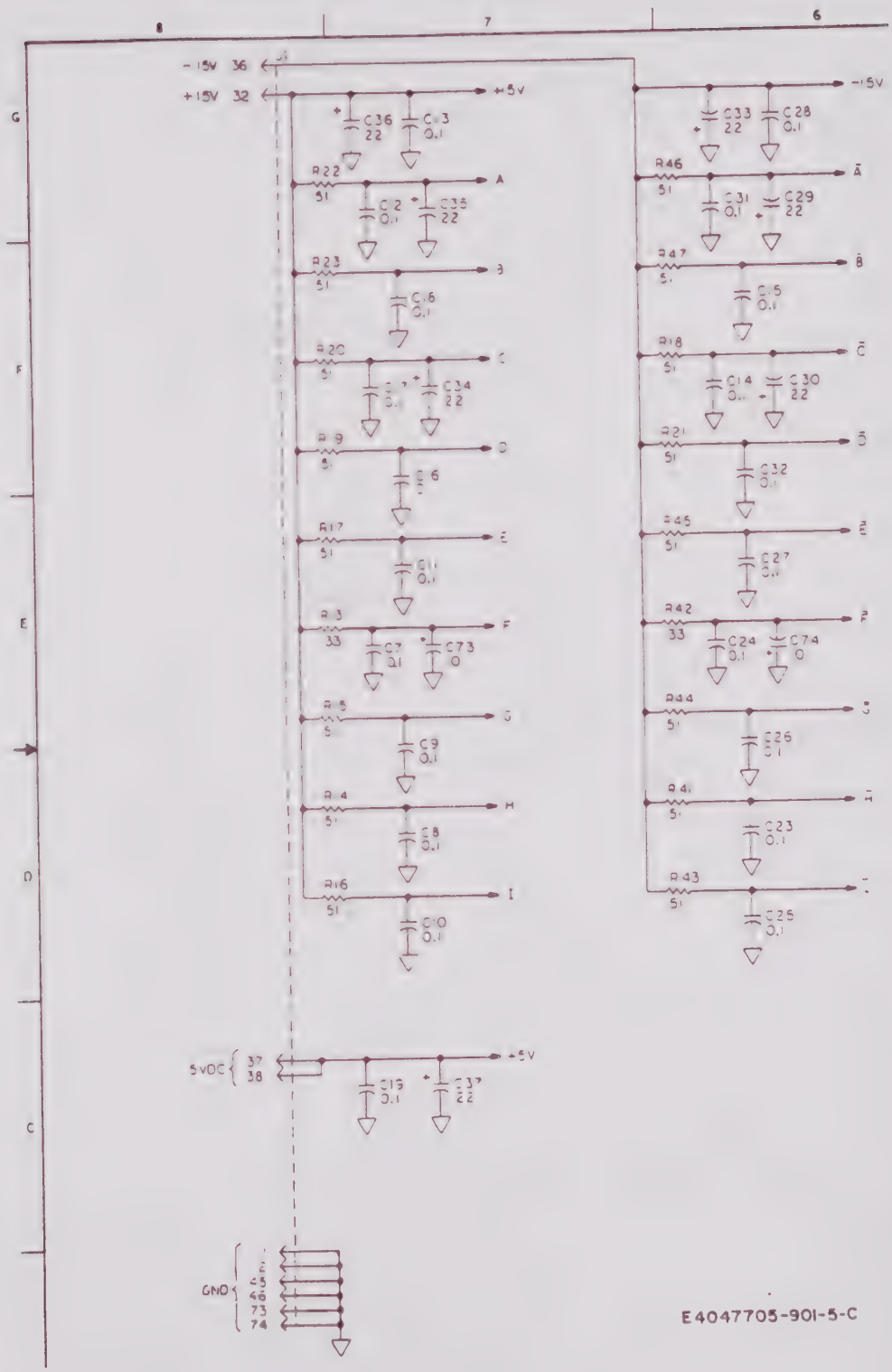

P_S Inner Loop Card A12 Schematic
Figure 4-47 (Sheet 5)

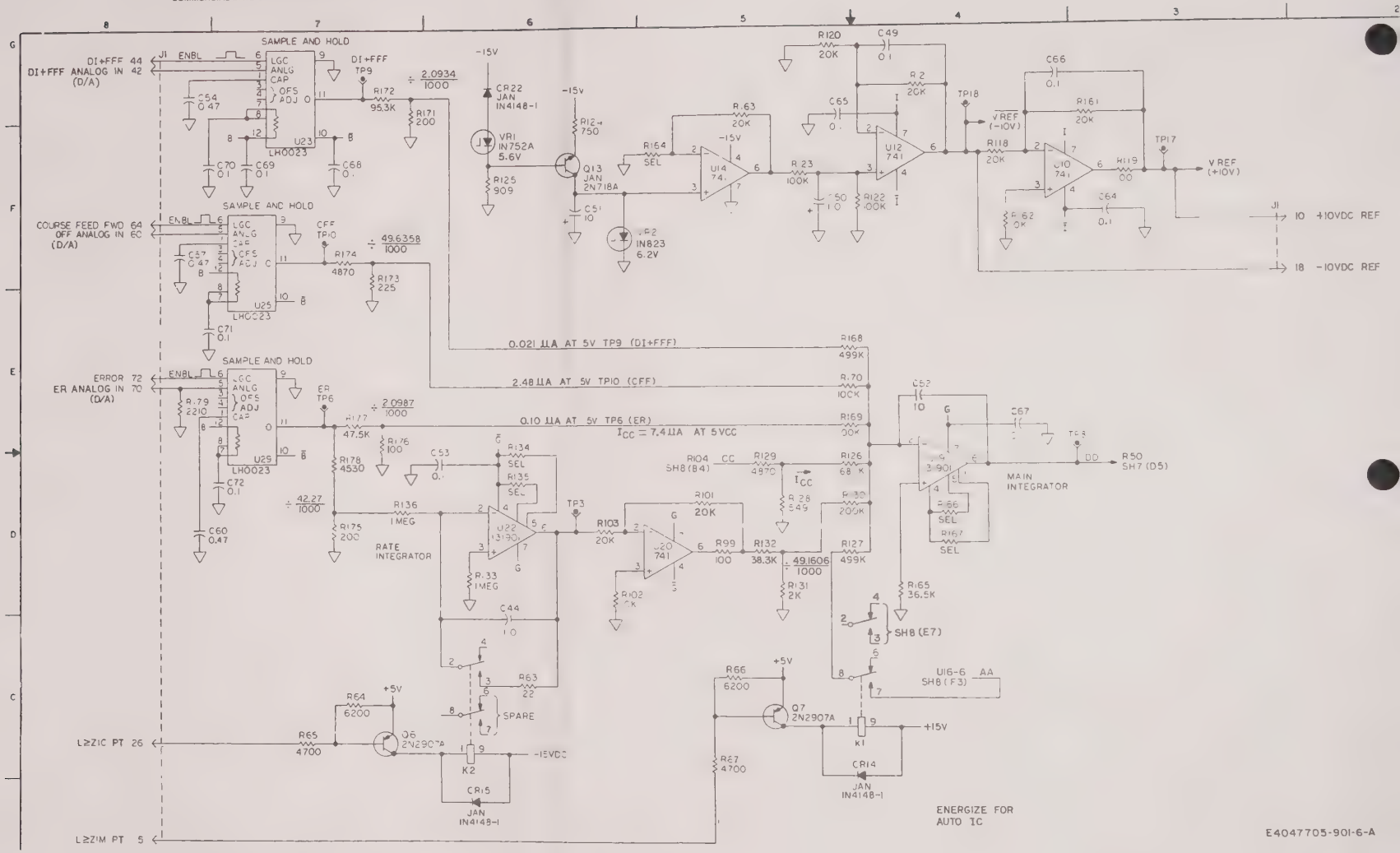

P_t Inner Loop Card A12 Schematic
Figure 4-47 (Sheet 6)

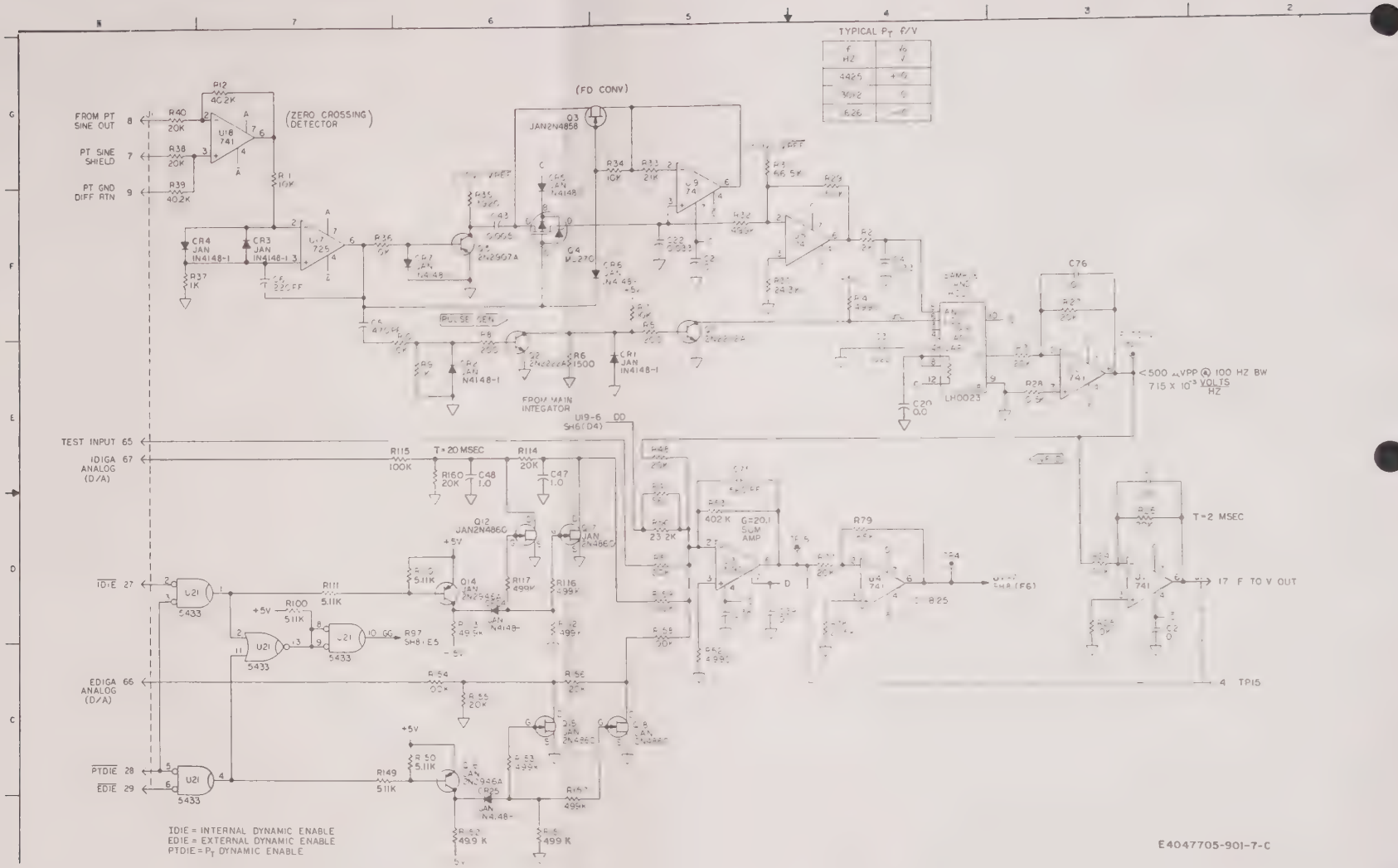

Pt Inner Loop Card A12 Schematic
Figure 4-47 (Sheet 7)

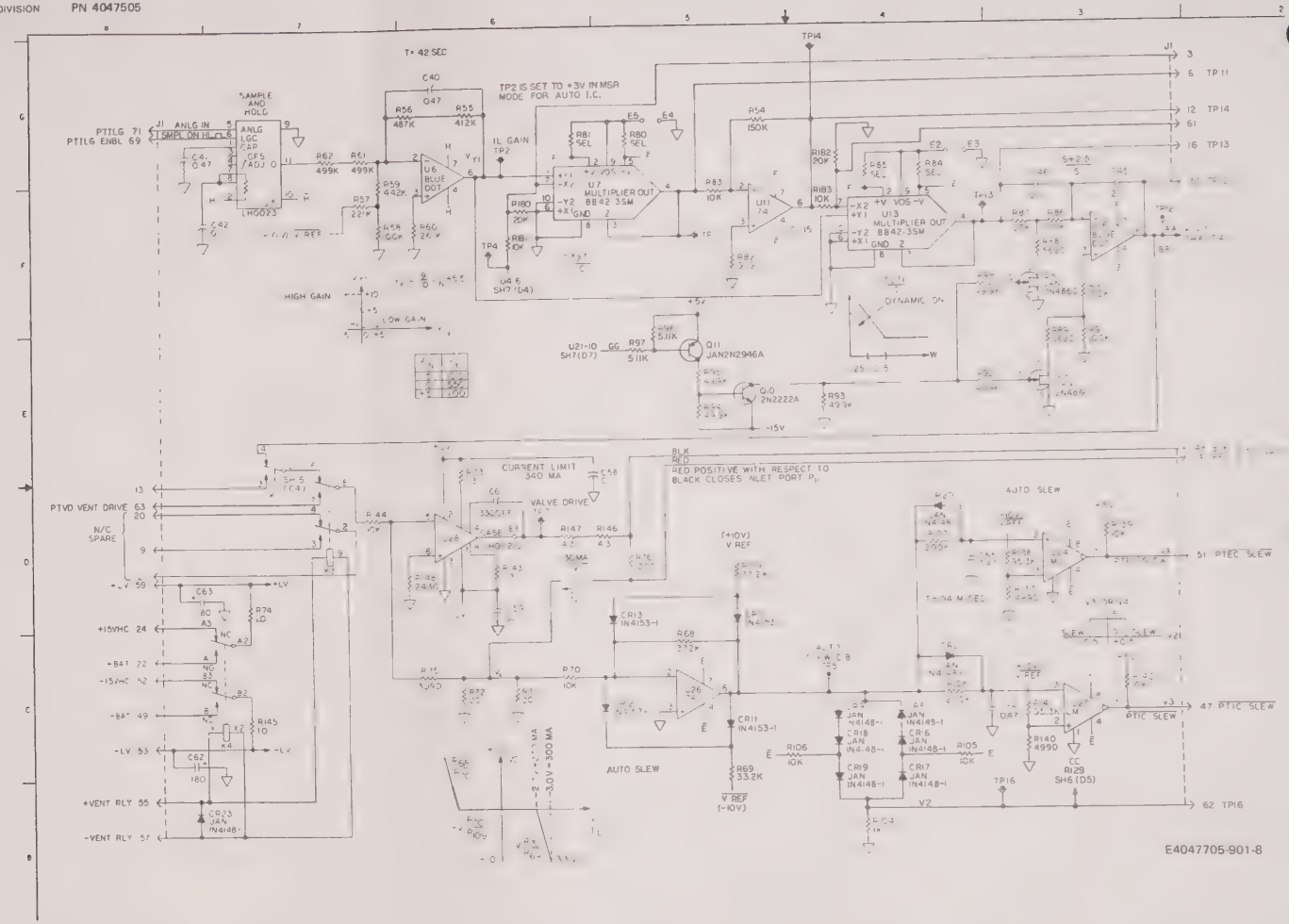

P_t Inner Loop Card A12 Schematic
Figure 4-47 (Sheet 8)

Revision Index (Arrow Designation)	Revision Description	Effectivity

Sheets 2 and 3 intentionally left blank.

P_S Inner Loop Card A13 Schematic
Figure 4-48 (Sheets 2 and 3)

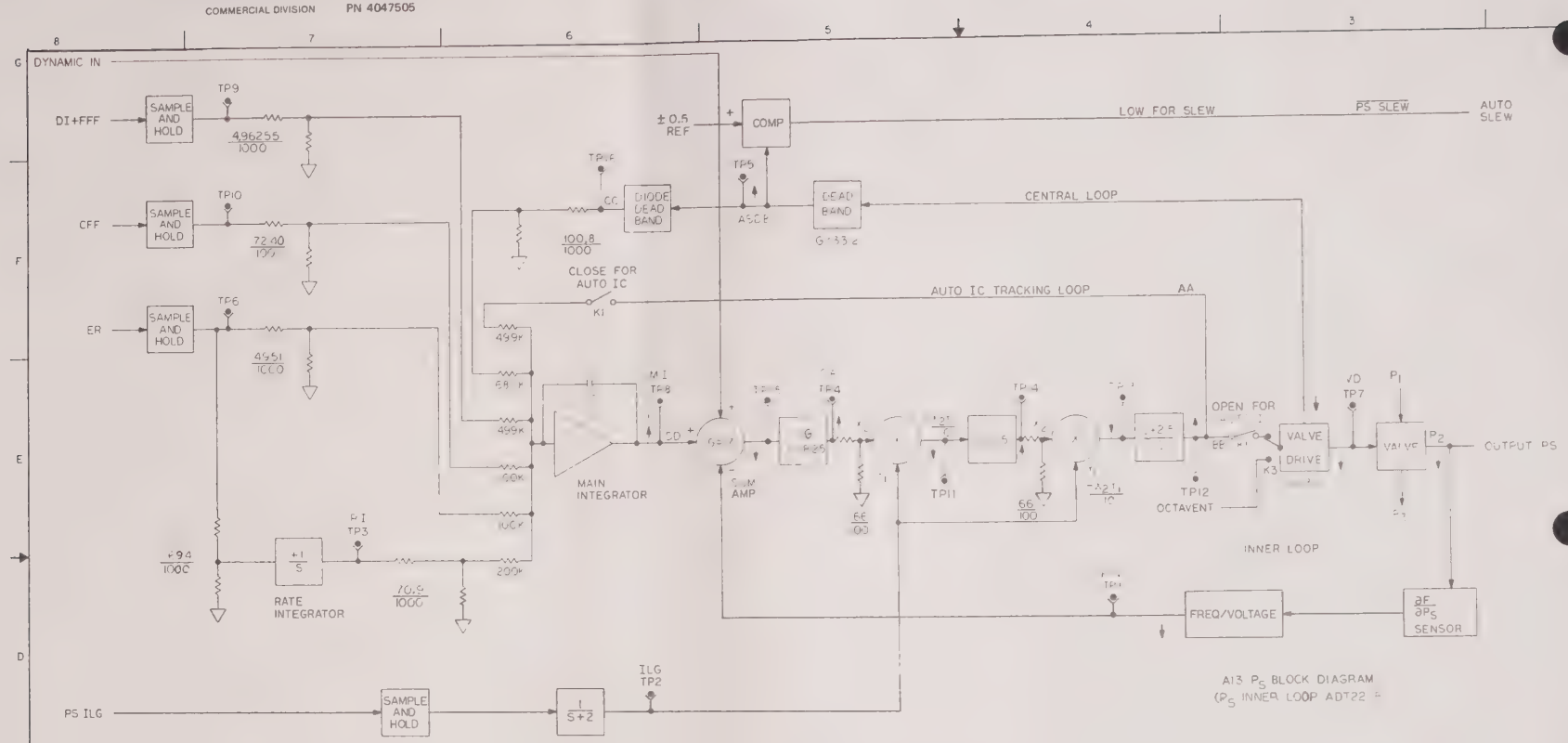

A13 P_S BLOCK DIAGRAM
(P_S INNER LOOP ADT22 =

DICTIONARY
ER = ERROR REGISTER (10VFS)
OFF = COARSE FEED FORWARD (10VFS)
FFF = FINE FEED FORWARD (10VFS)
DI = DIGITAL INTEGRATOR (10VFS)
S AND H = SAMPLE AND HOLD
ILG = INNER LOOP GAIN (0-10)
GBP = GAIN BANDWIDTH PRODUCT
ASDB = AUTO SLEW DEAD BAND (25VFS)
F/V = FREQ/VOLTAGE (25VFS)

DICTIONARY (CONTD)
RI = RATE INTEGRATOR (10VFS)
MI = MAIN INTEGRATOR (25VFS)
SA = SUM AMP (2.5VFS)
VD = VALVE DRIVE (25VFS)

- OPEN CENTRAL LOOP $(17)(5.5)(.1\le G\le 1)(10)(.1\le G\le 1)\left(\frac{S+2.5}{S}\right)\left(\frac{3}{10}\right)(33.2)\left(\frac{100.8}{1000}\right)\left(\frac{1.47}{S}\right)\approx 13.8\frac{(S+2.5)}{S^2}<13.80\frac{(S+2.5)}{S^2}$
- OPEN AUTO I.C. LOOP TP2=3V $(17)(5.5)(.3)(10)(.3)\left(\frac{S+2.5}{S}\right)\left(\frac{2}{S}\right)=16.8\left(\frac{S+2.5}{S^2}\right)$
- OPEN INNERLOOP $(17)(5.5)(.1\le G\le 1)(10)(.1<G<)\left(\frac{S+2.5}{S}\right)(30)\left(\frac{GBP}{S+b}\right)\left(\frac{\partial f}{\partial P_S}\right)\left(8.4\times10^{-3}\right)\approx 236.G^2\left(\frac{S+2.5}{S}\right)\left(\frac{GBP}{S+b}\right)\left(\frac{\partial f}{\partial P_S}\right)$
- OPEN DYNAMIC INNERLOOP $\frac{S+25}{S}\longrightarrow\frac{S+.25}{S}$

E4047707-901-4-D

P_S Inner Loop Card A13 Schematic
Figure 4-48 (Sheet 4)

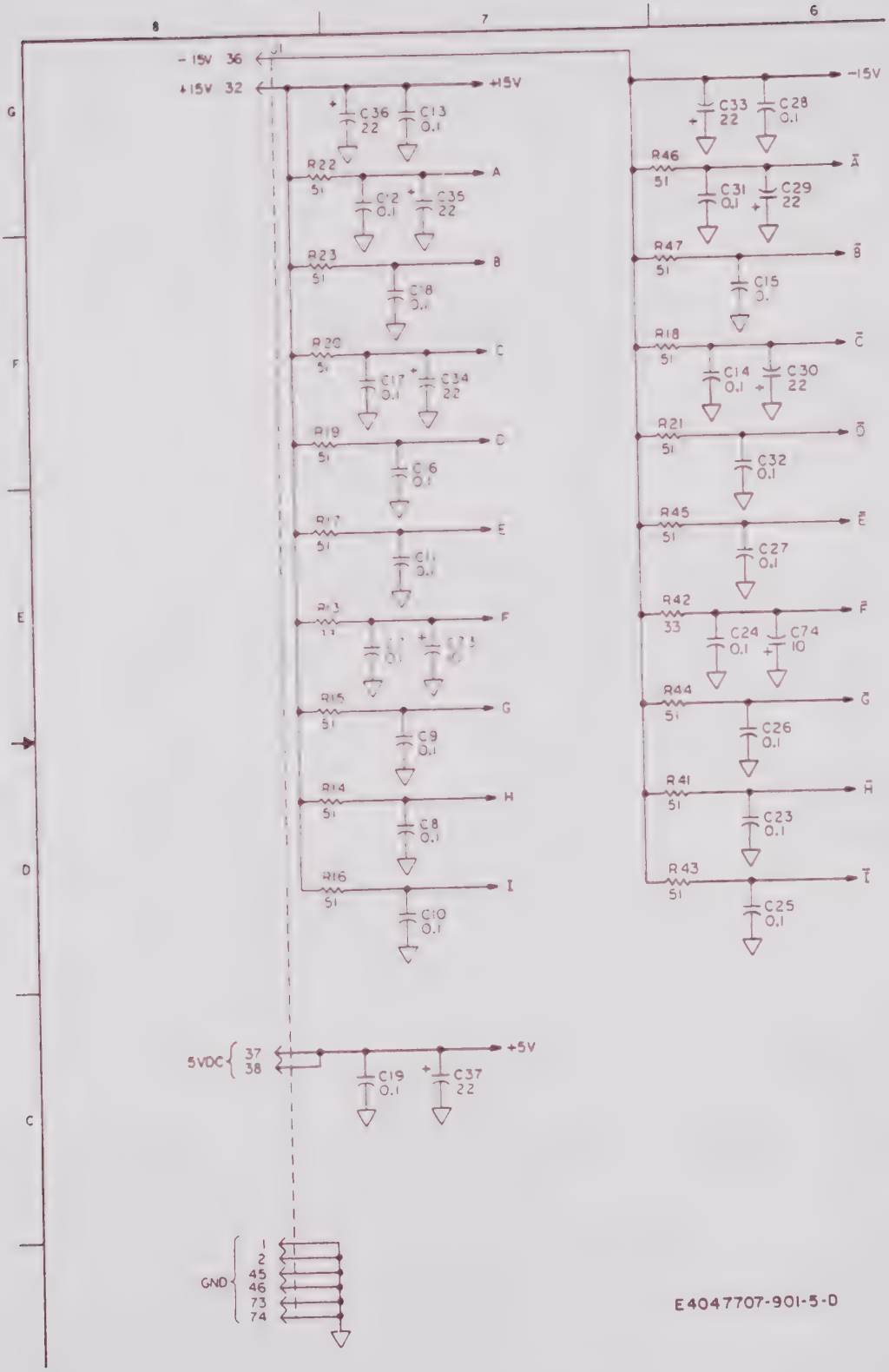

P_S Inner Loop Card A13 Schematic
Figure 4-48 (Sheet 5)

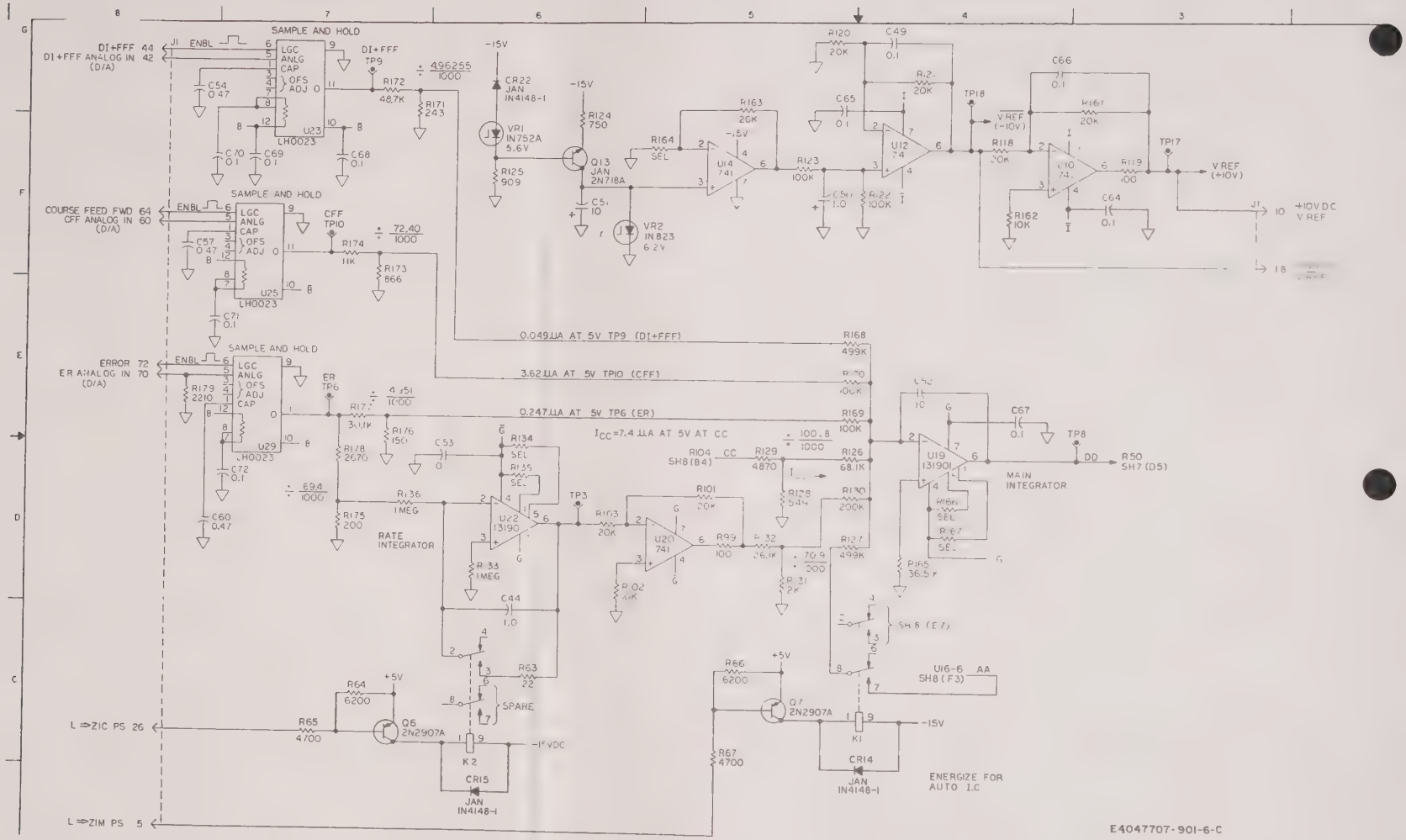

Ps Inner Loop Card A13 Schematic
Figure 4-48 (Sheet 6)

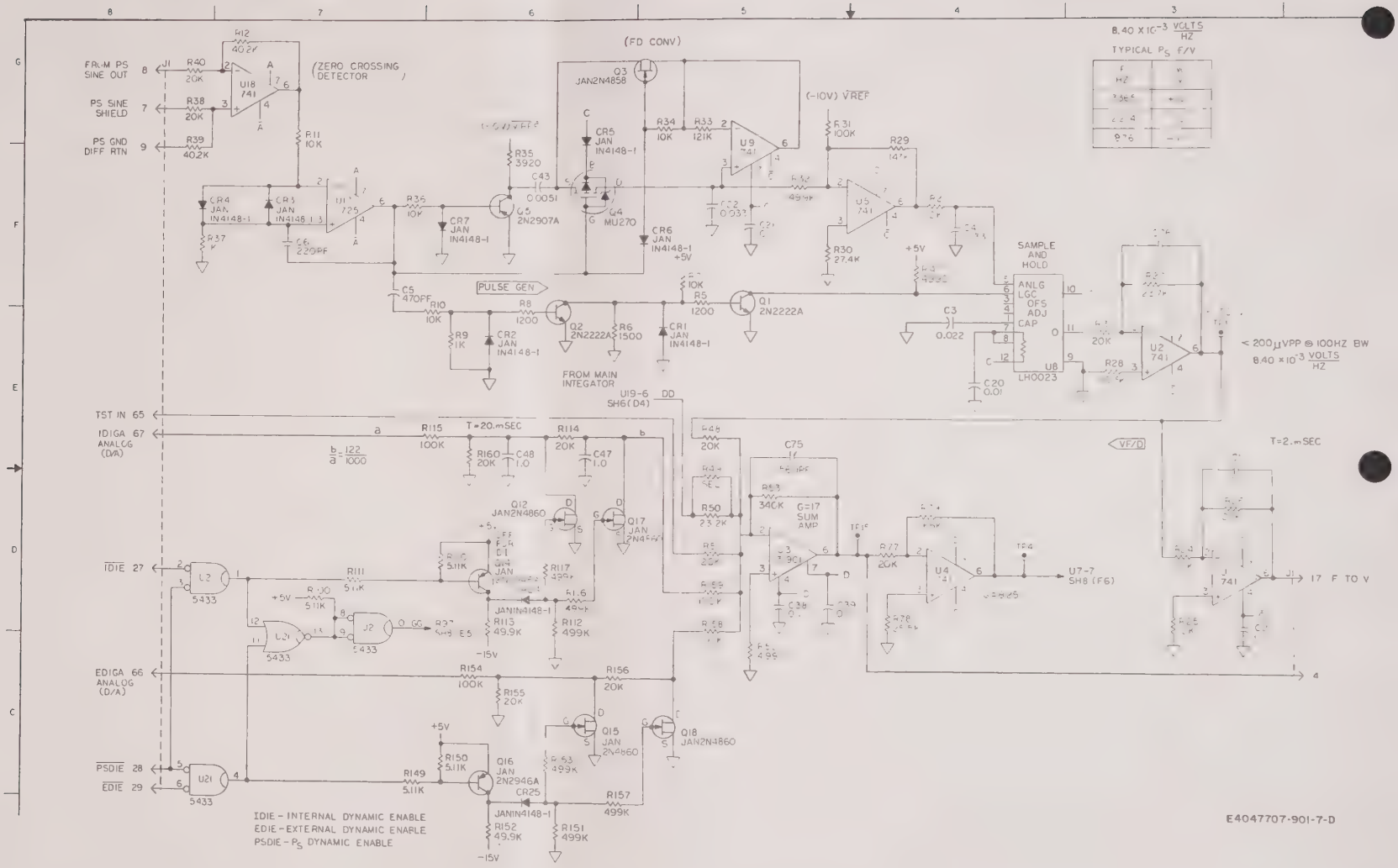

Ps Inner Loop Card A13 Schematic
Figure 4-48 (Sheet 7)

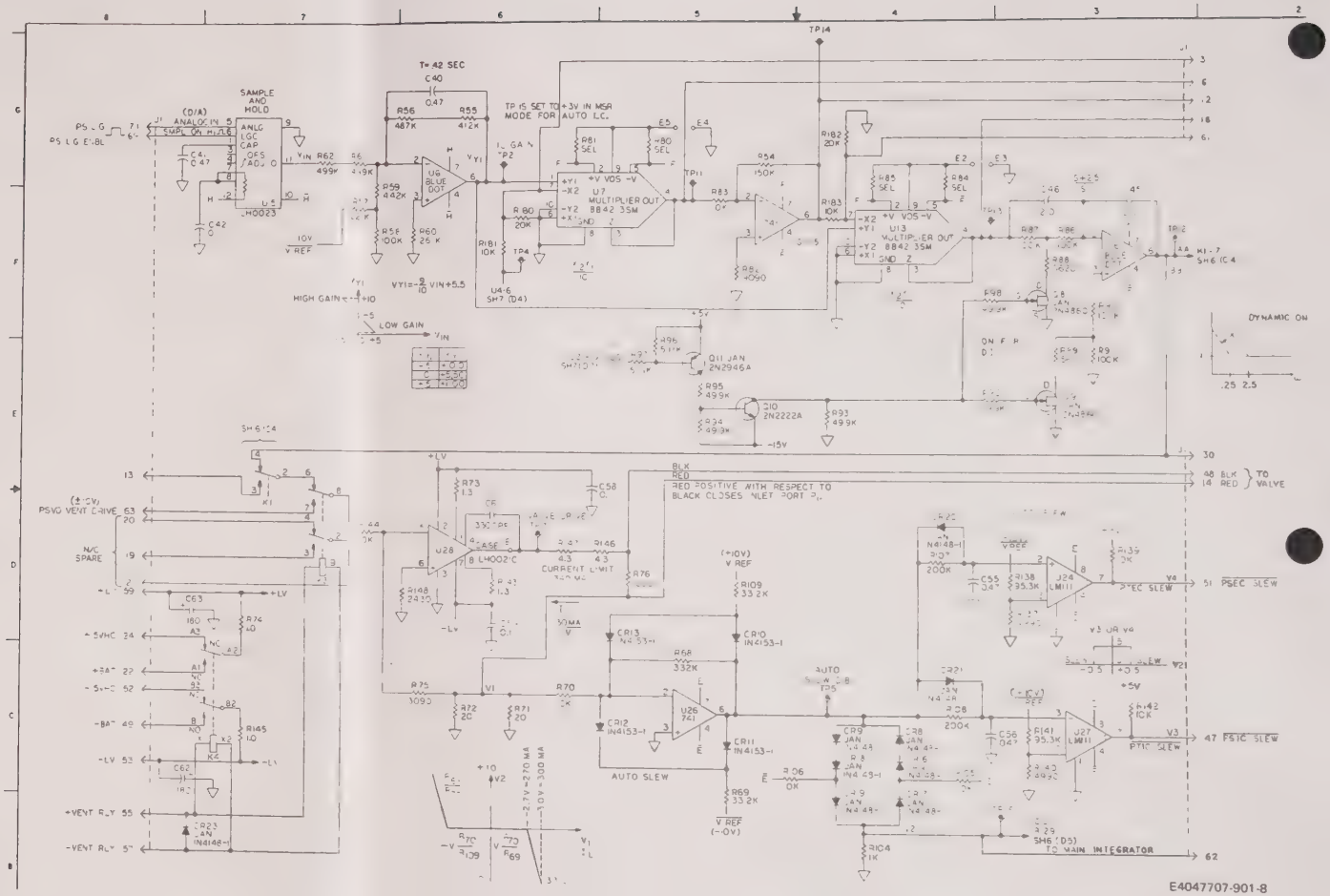
TP14
T= 42 SEC
C40
0.47
SAMPLE AND HOLD
(D/A) ANALOG IN
SMPL ON MARK
ANLG LGC CAP
OFS ADJ
PS LG ENBL
VIN
R62
499K
R56
487K
R55
412K
TP15 IS SET TO +3V IN MSR MODE FOR AUTO L.G.
R81 SEL
R80 SEL
R85 SEL
R84 SEL
R54
150K
R82
20K
R83
0K
R80
20K
R81
10K
R59
442K
R58
100K
R60
26.1K
10V V REF
VY1=-2/10 VIN+5.5
HIGH GAIN
LOW GAIN
U7 MULTIPLIER OUT 8842 35M
U13 MULTIPLIER OUT 8842 35M
R86
4090
R87
100K
R88
100K
R89
10CK
DYNAMIC ON
.25 2.5
Q11 JAN 2N2946A
Q10 2N2222A
R95
499K
R94
49.9K
R93
499K
-15V
+5V
SH 6 IC 4
SH 6 IC 3
SH 6 IC 2
SH 6 IC 1
SH 6 (D4)
SH 6 (D5)
SH 6 C4
SH 6 C3
SH 6 C2
SH 6 C1
TO MAIN INTEGRATOR
PSVO VENT DRIVE
N/C SPARE
+LV
-LV
+5VDC
+5A
-5A
-BA
+VENT RLY
-VENT RLY
K1
K2
R145
10
R74
10
R73
1.3
C58
.01
U28
LH0021C
CURRENT LIMIT
4.3
4.3
R76
R147
R148
2430
R77
1.3
50MA
R75
1090
R72
20
R71
20
R70
0K
CR13 IN4153-1
CR10 IN4153-1
CR12 IN4153-1
CR11 IN4153-1
R68
332K
U26 741
AUTO SLEW
R69
33.2K
V REF (-0V)
(+10V) V REF
R109
33.2K
R106
0K
R104
1K
R142
10K
R141
95.3K
R138
95.3K
R135
2K
C55
.04
C56
.047
C57
.047
R108
200K
R107
200K
R128
200K
CR9 JAN 1N4148-1
CR8 JAN 1N4148-1
CR7 JAN 1N4148-1
CR6 JAN 1N4148-1
CR5 JAN 1N4148-1
CR4 JAN 1N4148-1
CR3 JAN 1N4148-1
CR2 JAN 1N4148-1
CR1 JAN 1N4148-1
CR23 JAN 1N4148-1
CR22 JAN 1N4148-1
CR21 JAN 1N4148-1
CR20 JAN 1N4148-1
CR19 JAN 1N4148-1
CR18 JAN 1N4148-1
CR17 JAN 1N4148-1
CR16 JAN 1N4148-1
CR15 JAN 1N4148-1
CR14 JAN 1N4148-1
CR24 JAN 1N4148-1
CR25 JAN 1N4148-1
CR26 JAN 1N4148-1
CR27 JAN 1N4148-1
CR28 JAN 1N4148-1
CR29 JAN 1N4148-1
CR30 JAN 1N4148-1
CR31 JAN 1N4148-1
CR32 JAN 1N4148-1
CR33 JAN 1N4148-1
CR34 JAN 1N4148-1
CR35 JAN 1N4148-1
CR36 JAN 1N4148-1

Revision Index (Arrow Designation)	Revision Description	Effectivity

Front Panel Multiplexer Card A14 Schematic
Figure 4-49 (Sheet 1 of 11)

Sheet 2 intentionally left blank.

Front Panel Multiplexer Card A14 Schematic
Figure 4-49 (Sheet 2)

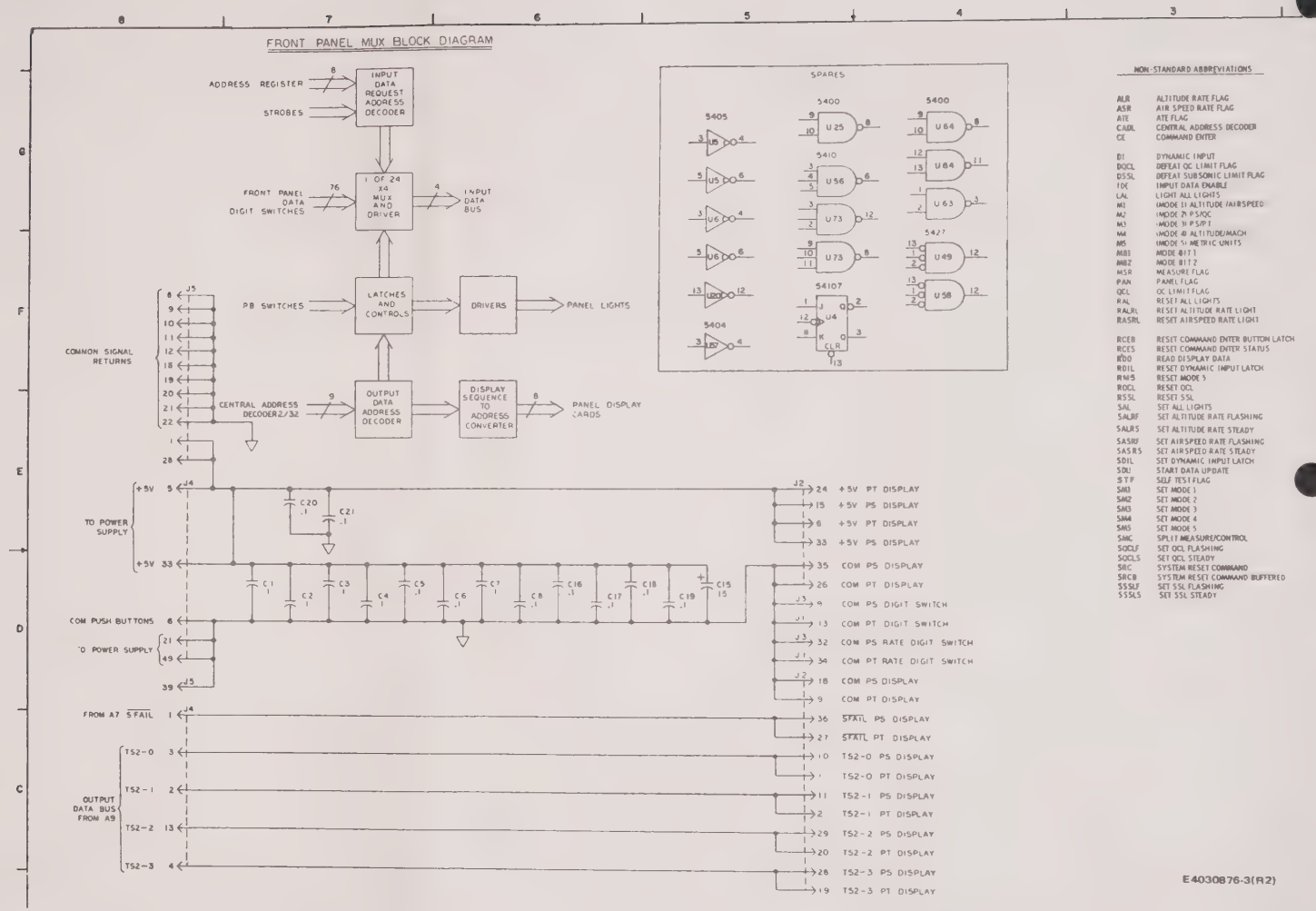

NON-STANDARD ABBREVIATIONS

ALR	ALTITUDE RATE FLAG
ASR	AIR SPEED RATE FLAG
ATE	ATE FLAG
CADL	CENTRAL ADDRESS DECODER
CE	COMMAND ENTER
DI	DYNAMIC INPUT
DOCL	DEFEAT OC LIMIT FLAG
DSSL	DEFEAT SUBSONIC LIMIT FLAG
IDE	INPUT DATA ENABLE
LAL	LIGHT ALL LIGHTS
M1	(MODE 1) ALTITUDE/AIRSPEED
M2	(MODE 2) PSI/OC
M3	(MODE 3) PSI/PT
M4	(MODE 4) ALTITUDE/MACH
M5	(MODE 5) METRIC UNITS
MB1	MODE BIT 1
MB2	MODE BIT 2
MSR	MEASURE FLAG
PAN	PANEL FLAG
QCL	QC LIMIT FLAG
RAL	RESET ALL LIGHTS
RALRL	RESET ALTITUDE RATE LIGHT
RASRL	RESET AIRSPEED RATE LIGHT
RCEB	RESET COMMAND ENTER BUTTON LATCH
RCES	RESET COMMAND ENTER STATUS
RDO	READ DISPLAY DATA
RDIL	RESET DYNAMIC INPUT LATCH
RM5	RESET MODE 5
ROCL	RESET OCL
RSSL	RESET SSL
SAL	SET ALL LIGHTS
SALRF	SET ALTITUDE RATE FLASHING
SALRS	SET ALTITUDE RATE STEADY
SASRF	SET AIRSPEED RATE FLASHING
SASRS	SET AIRSPEED RATE STEADY
SDIL	SET DYNAMIC INPUT LATCH
SDU	START DATA UPDATE
STF	SELF TEST FLAG
SM1	SET MODE 1
SM2	SET MODE 2
SM3	SET MODE 3
SM4	SET MODE 4
SM5	SET MODE 5
SMC	SPLIT MEASURE/CONTROL
SOCLF	SET OCL FLASHING
SOCLS	SET OCL STEADY
SRC	SYSTEM RESET COMMAND
SRCB	SYSTEM RESET COMMAND BUFFERED
SSSLF	SET SSL FLASHING
SSSLS	SET SSL STEADY

E4030876-3(R2)

Front Panel Multiplexer Card A14 Schematic
Figure 4-49 (Sheet 3)

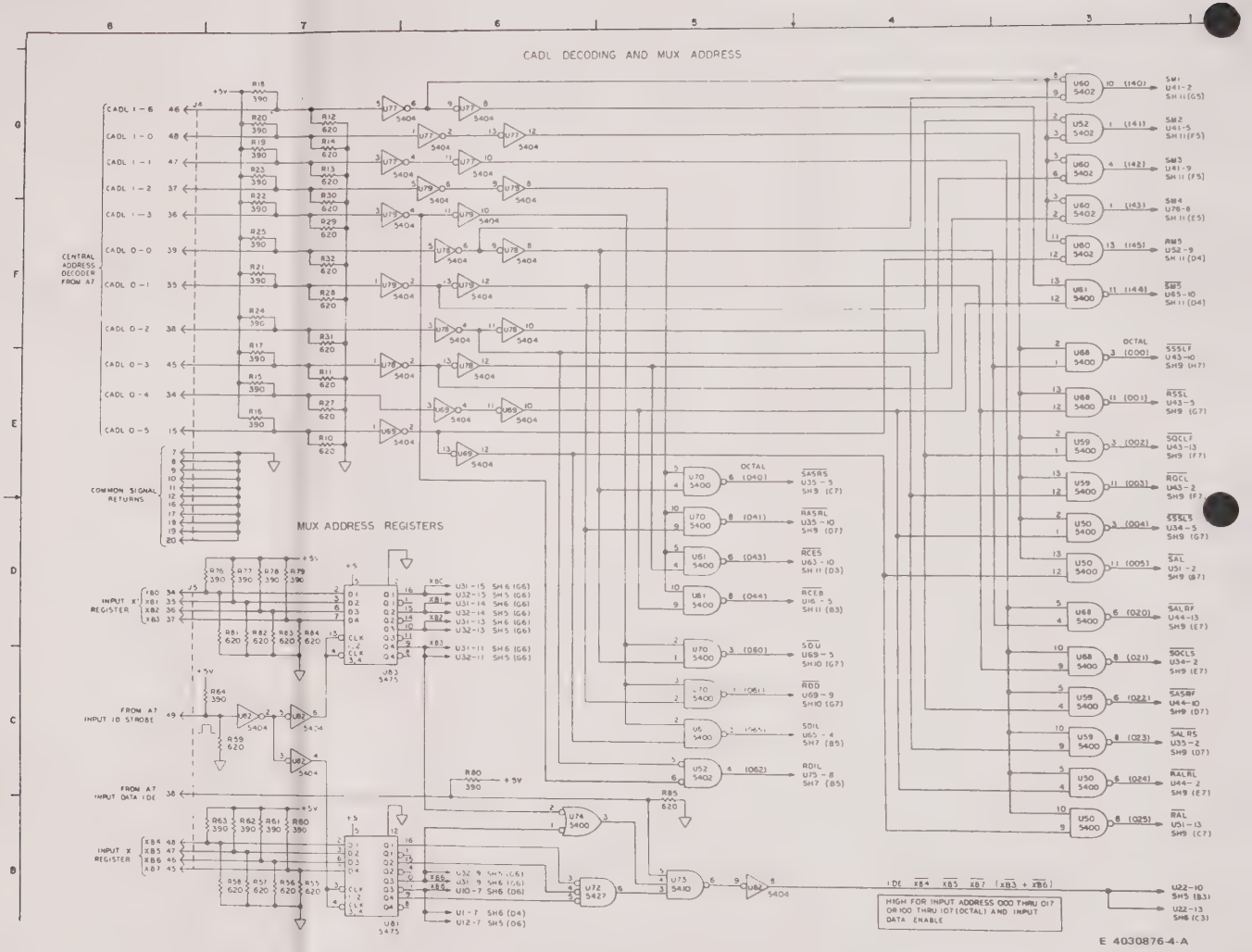

Front Panel Multiplexer Card A14 Schematic
Figure 4-49 (Sheet 4)

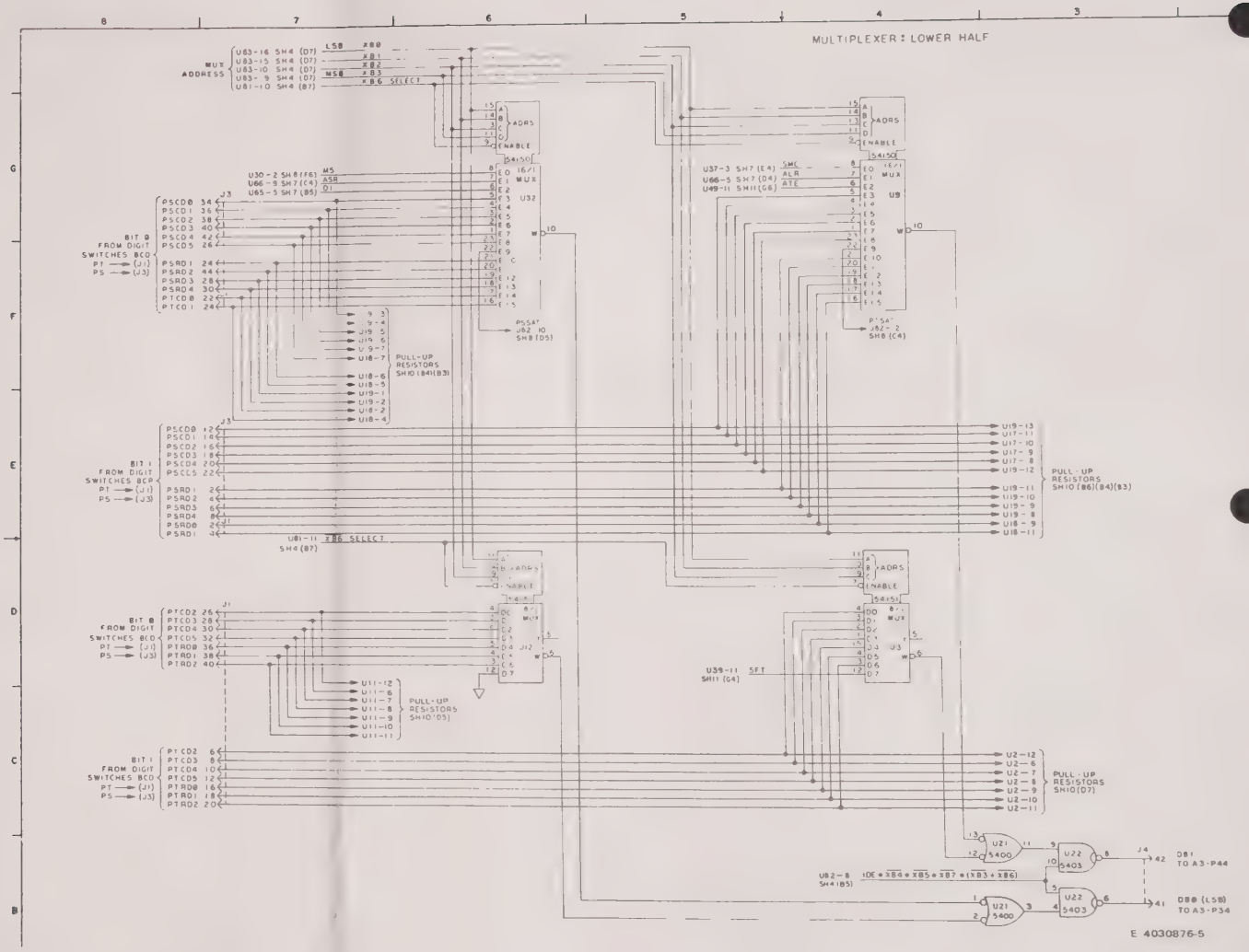

Front Panel Multiplexer Card A14 Schematic
Figure 4-49 (Sheet 5)

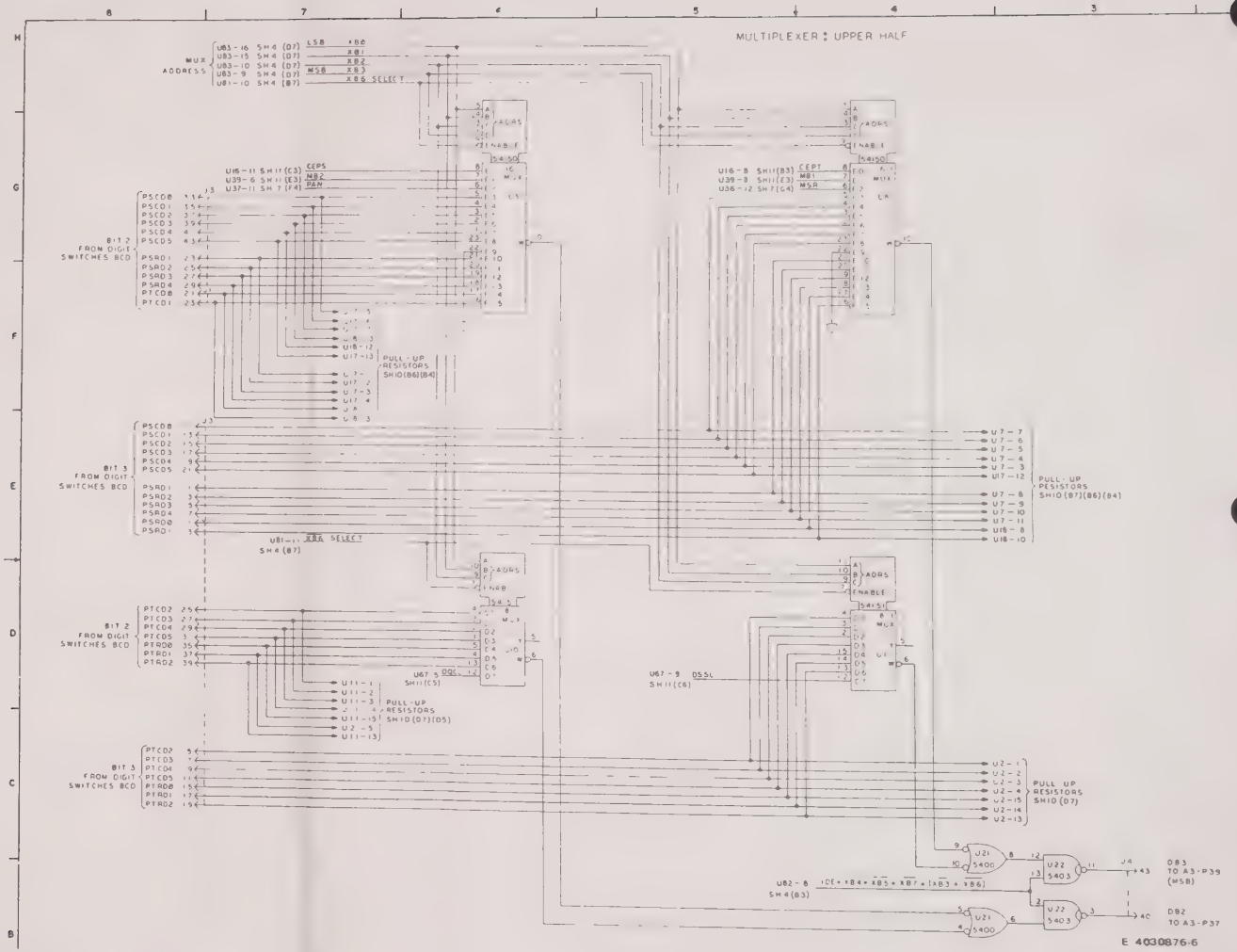

Front Panel Multiplexer Card A14 Schematic
Figure 4-49 (Sheet 6)

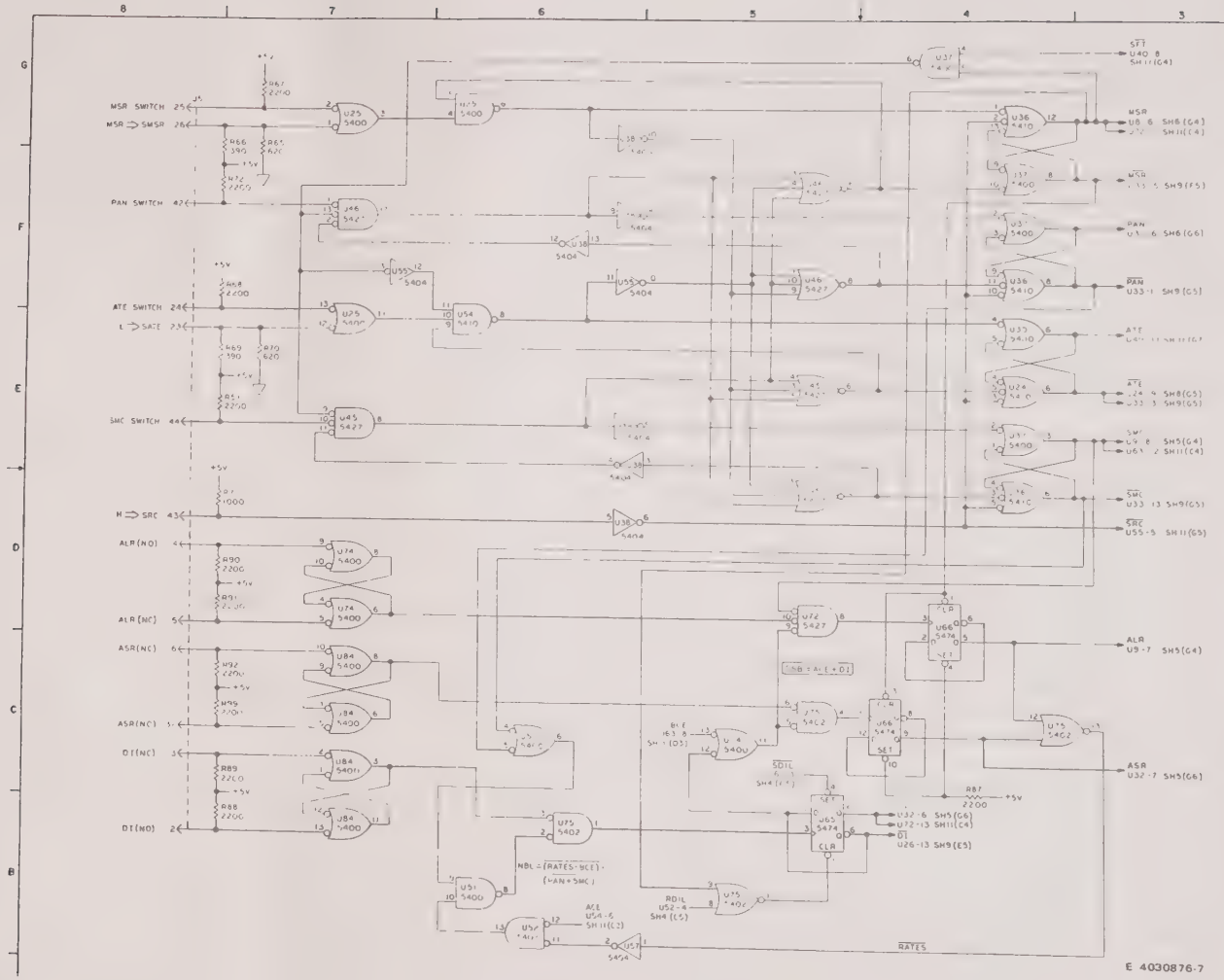

Front Panel Multiplexer Card A14 Schematic
Figure 4-49 (Sheet 7)

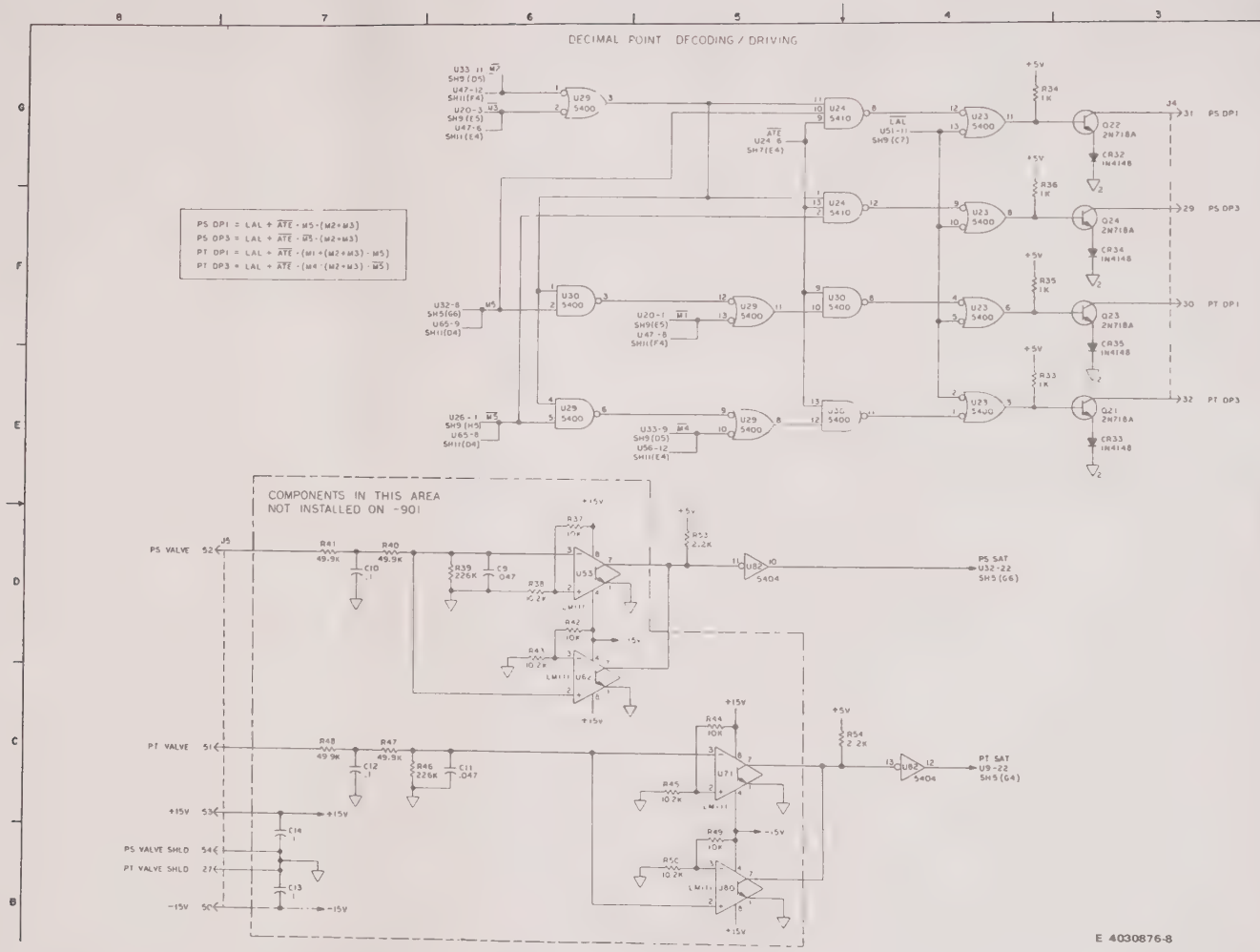

Front Panel Multiplexer Card A14 Schematic
Figure 4-49 (Sheet 8)

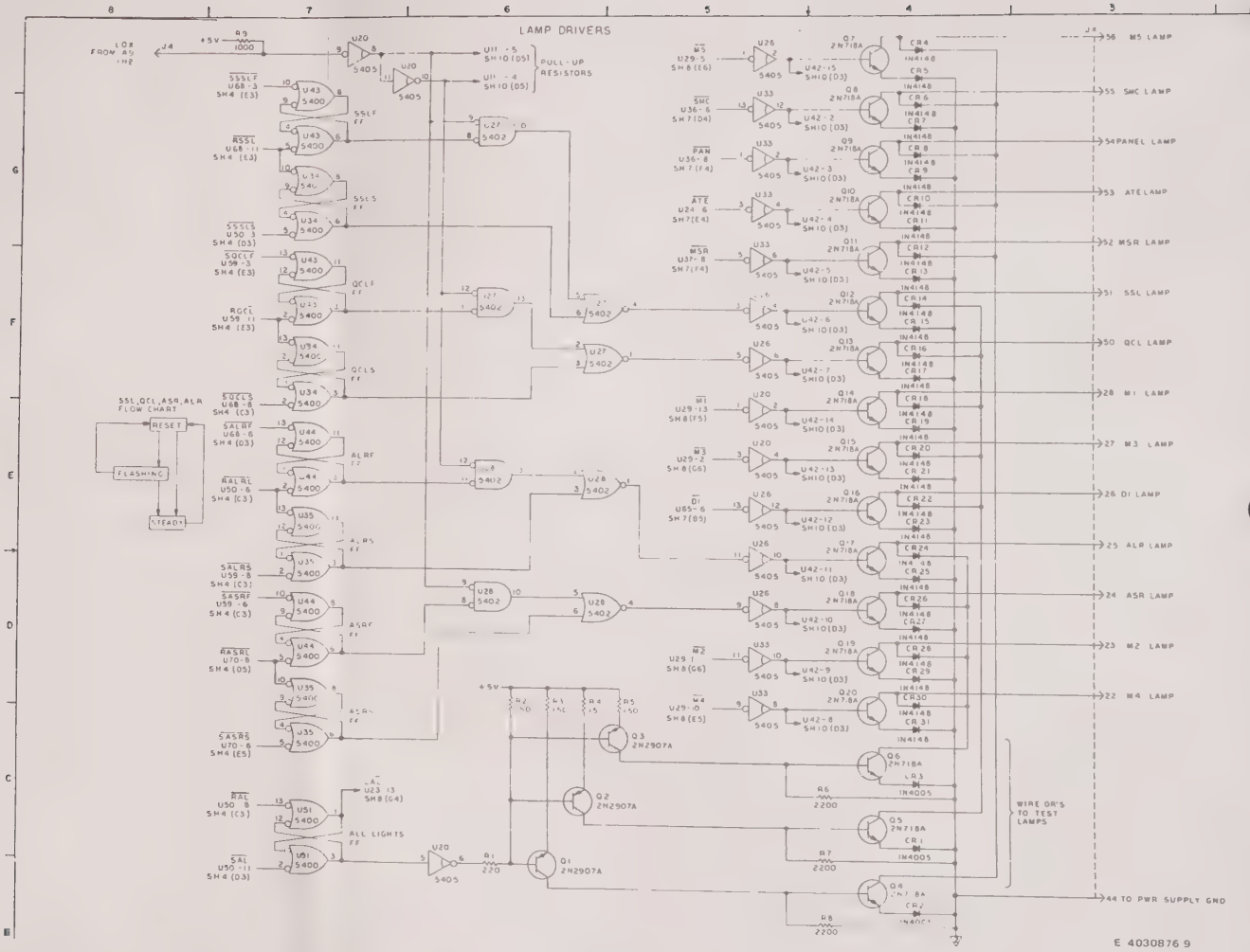

Front Panel Multiplexer Card A14 Schematic
Figure 4-49 (Sheet 9)

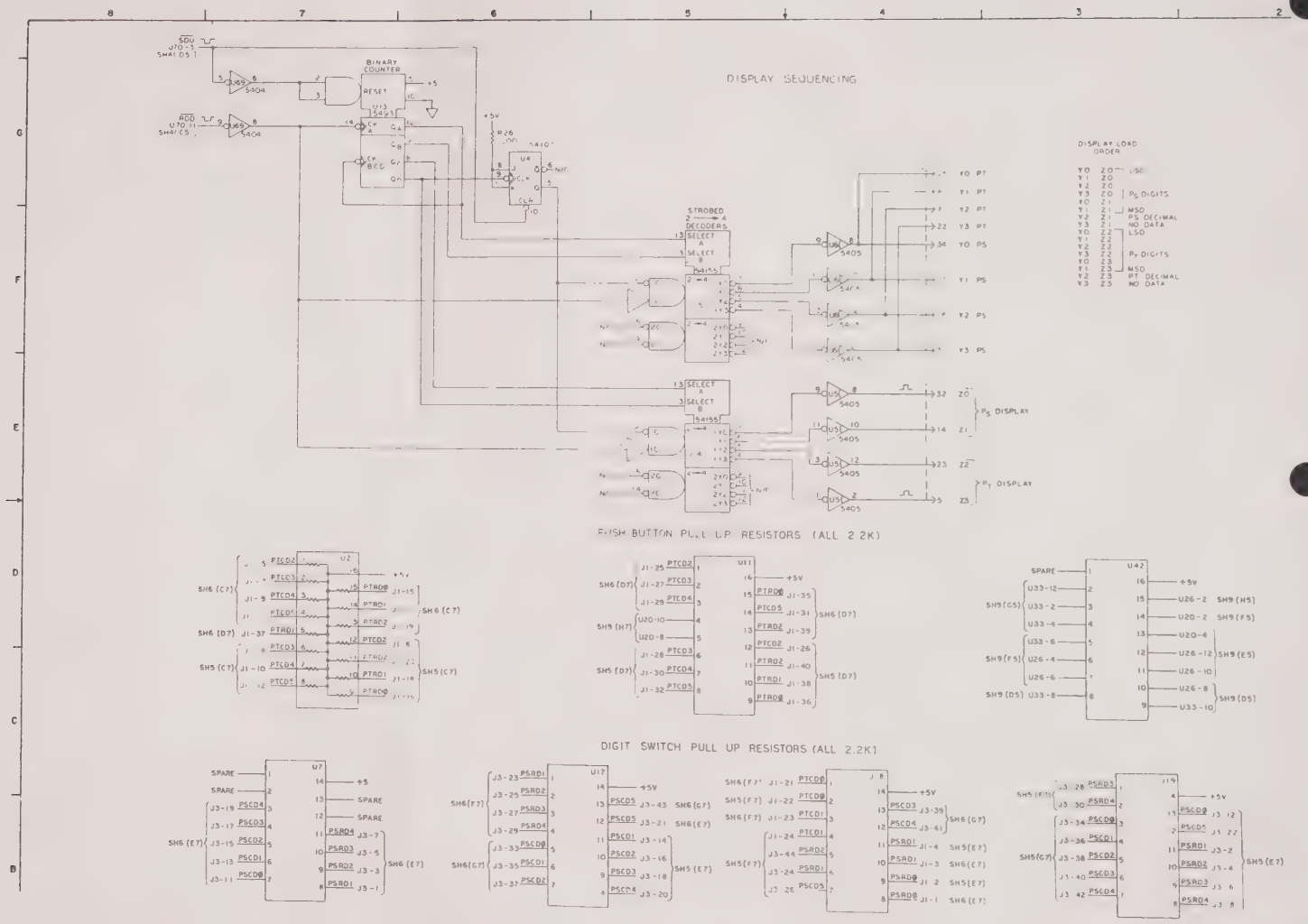

Front Panel Multiplexer Card A14 Schematic
Figure 4-49 (Sheet 10)

E 4030876-10

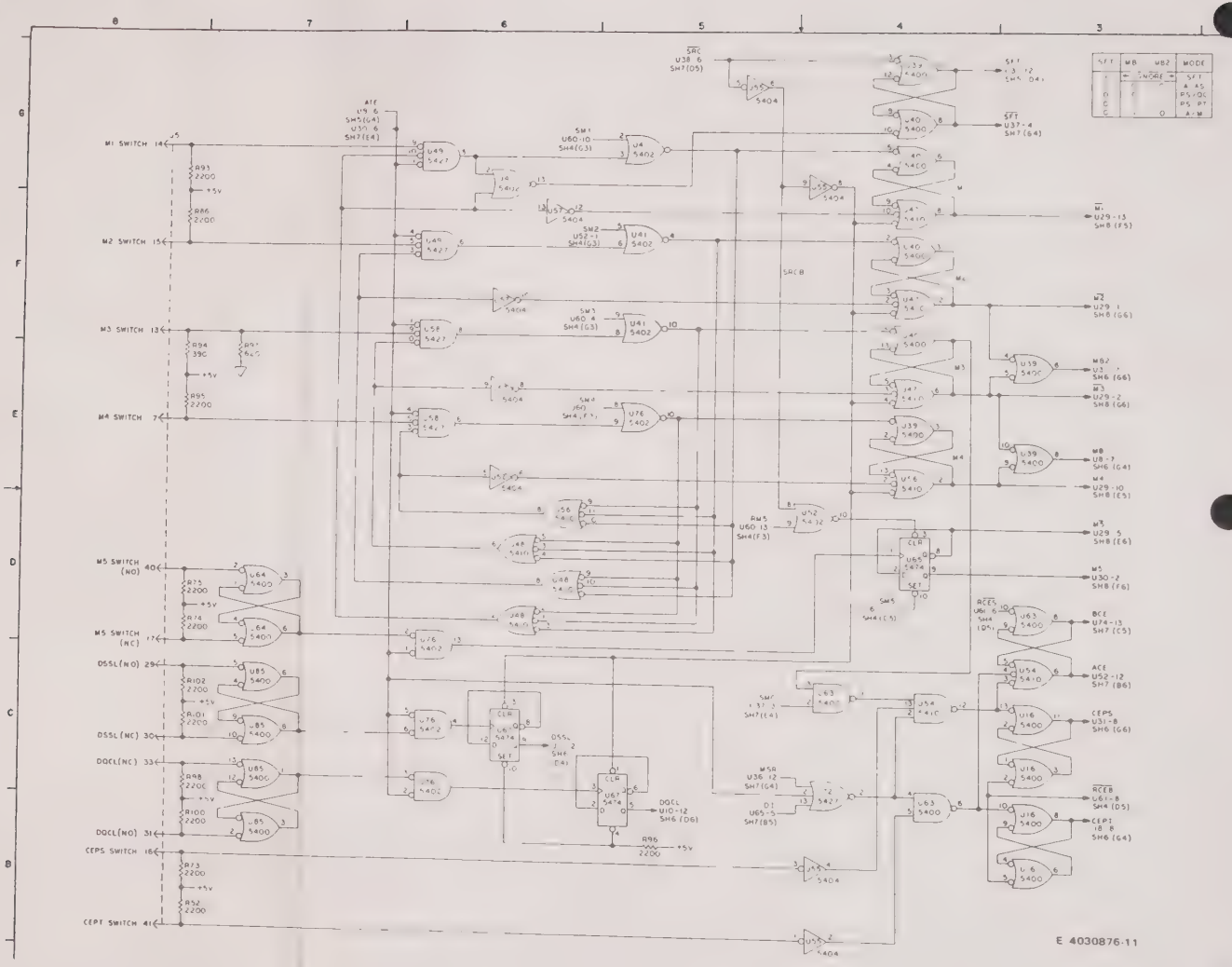

Front Panel Multiplexer Card A14 Schematic
Figure 4-49 (Sheet 11)

Revision Index (Arrow Designation)	Revision Description	Effectivity

Display Card A15, A16 Schematic
Figure 4-50 (Sheet 1 of 2)

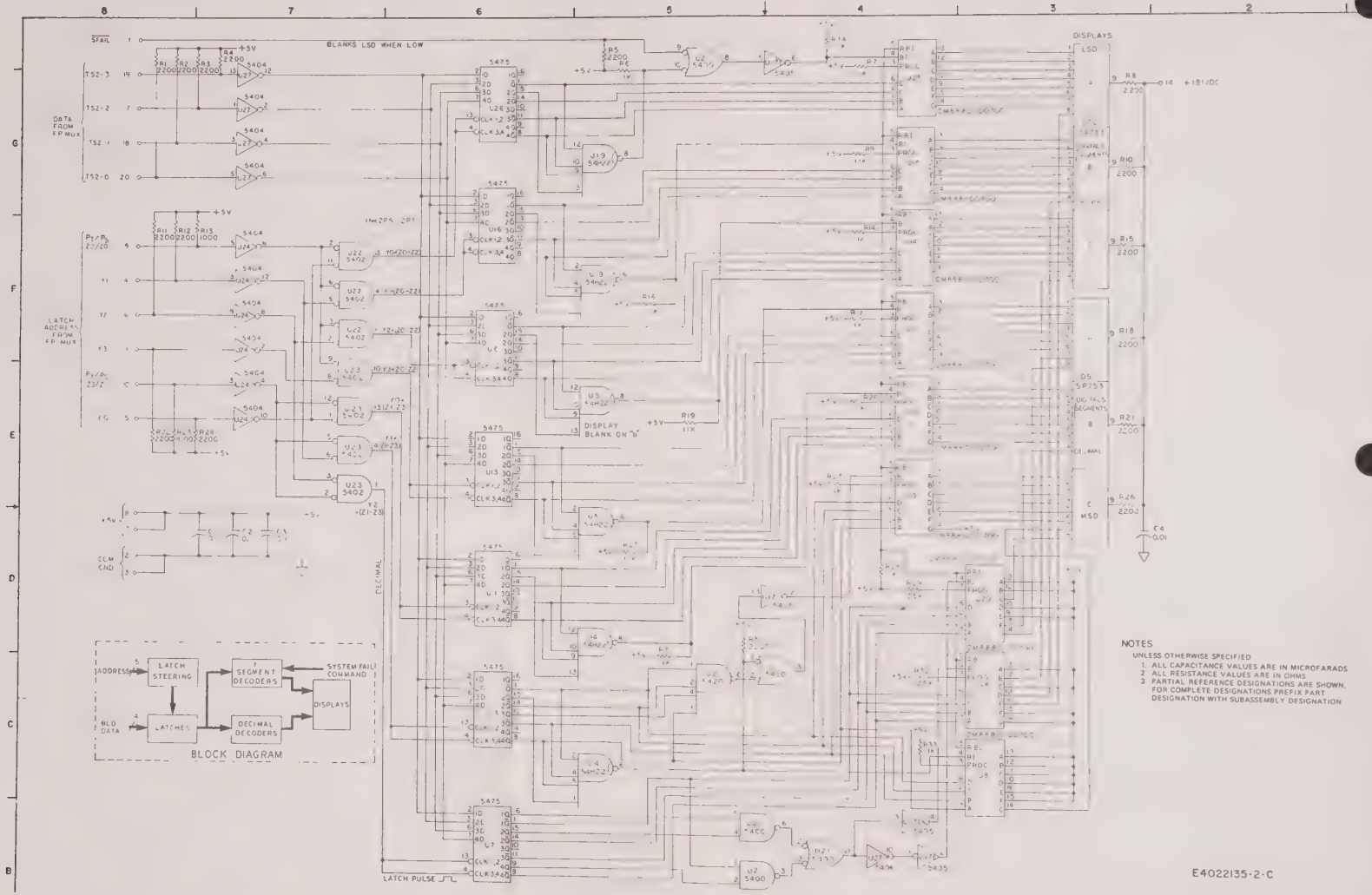

Display Card A15, A16 Schematic
Figure 4-50 (Sheet 2)

Revision Index (Arrow Designation)	Revision Description	Effectivity

Power Supply A17 Schematic
Figure 4-51 (Sheet 1 of 8)

Sheets 2 and 3 intentionally left blank.

Power Supply A17 Schematic
Figure 4-51 (Sheets 2 and 3)

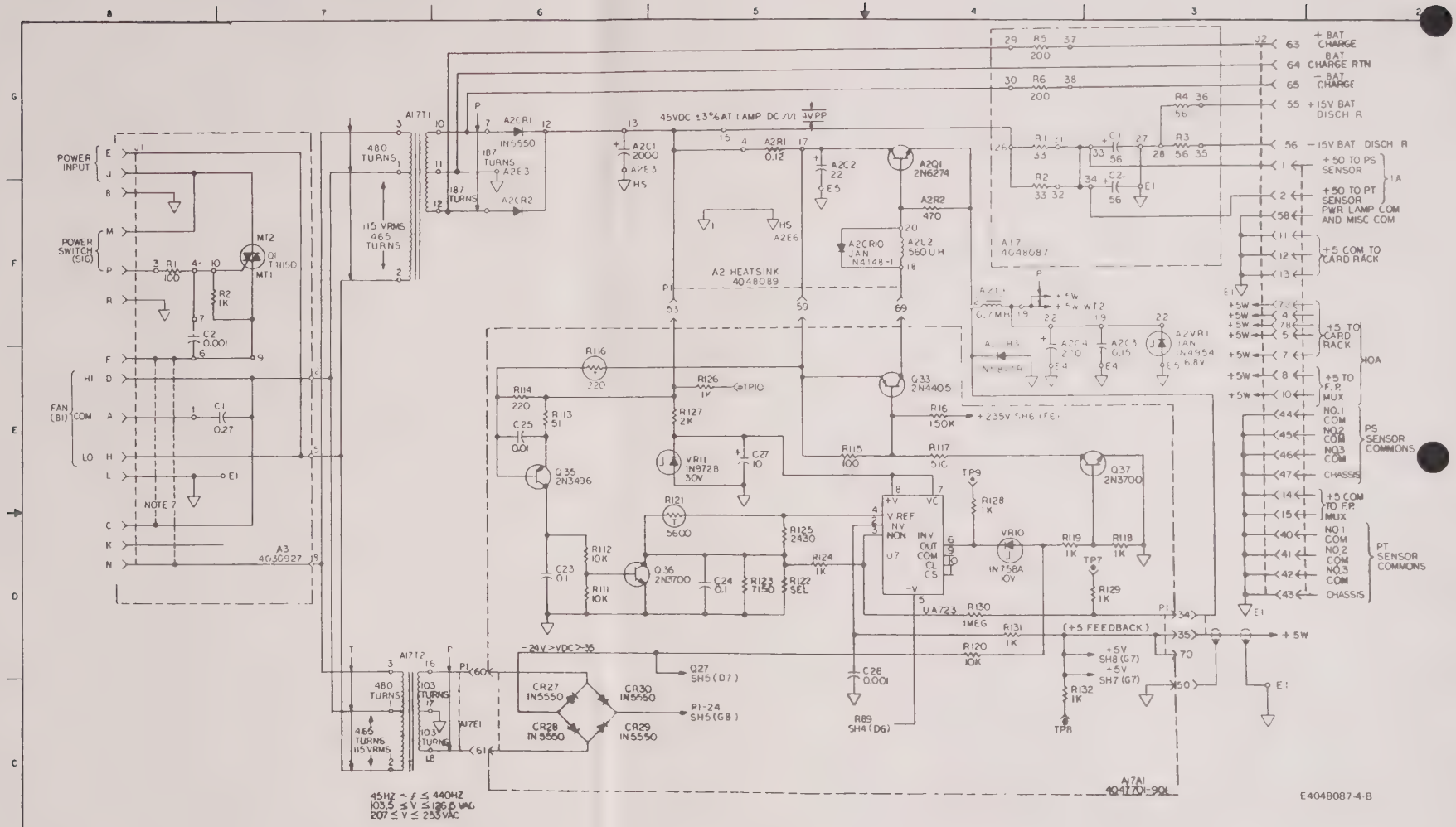

Power Supply A17 Schematic
Figure 4-51 (Sheet 4)

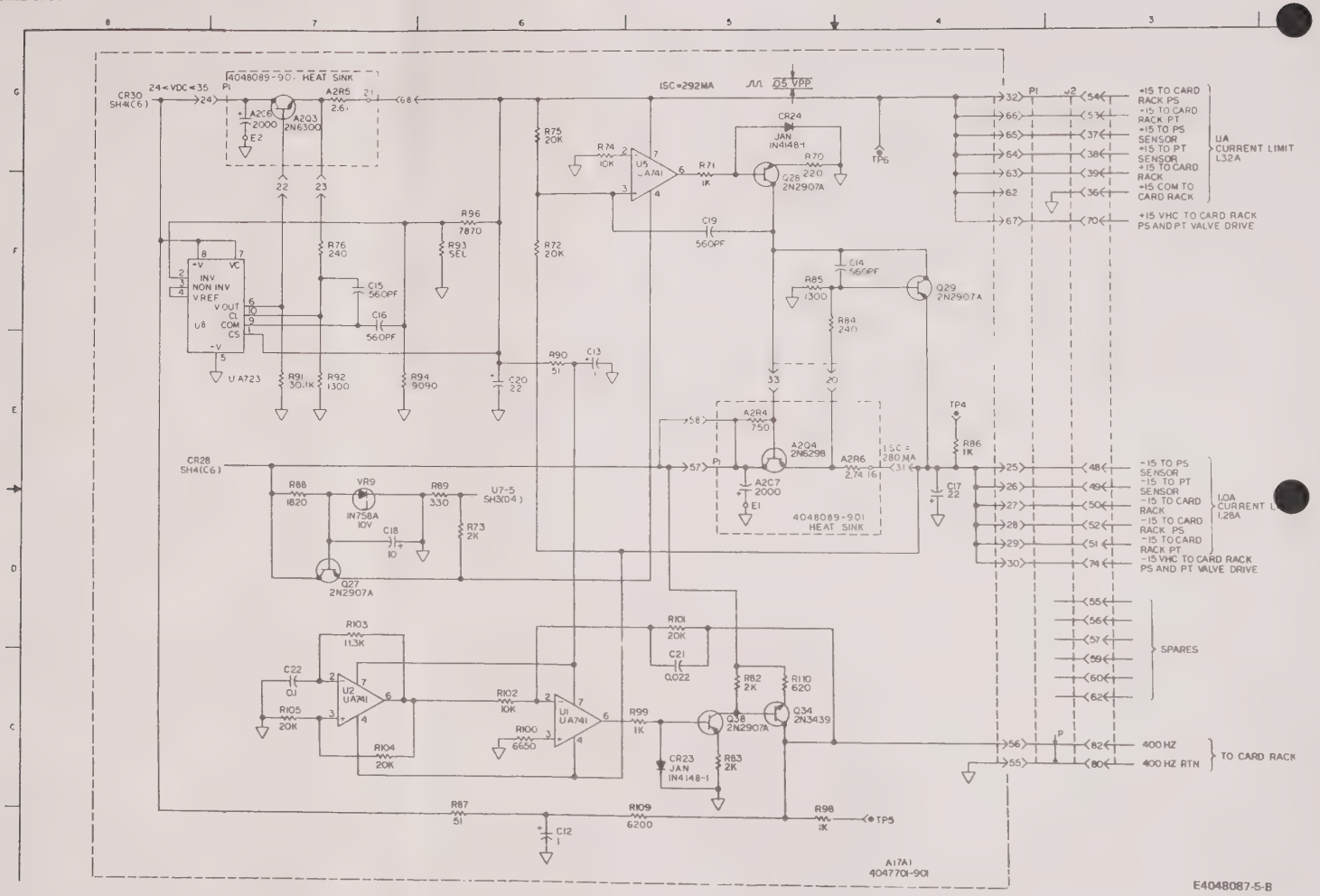

Power Supply A17 Schematic
Figure 4-51 (Sheet 5)

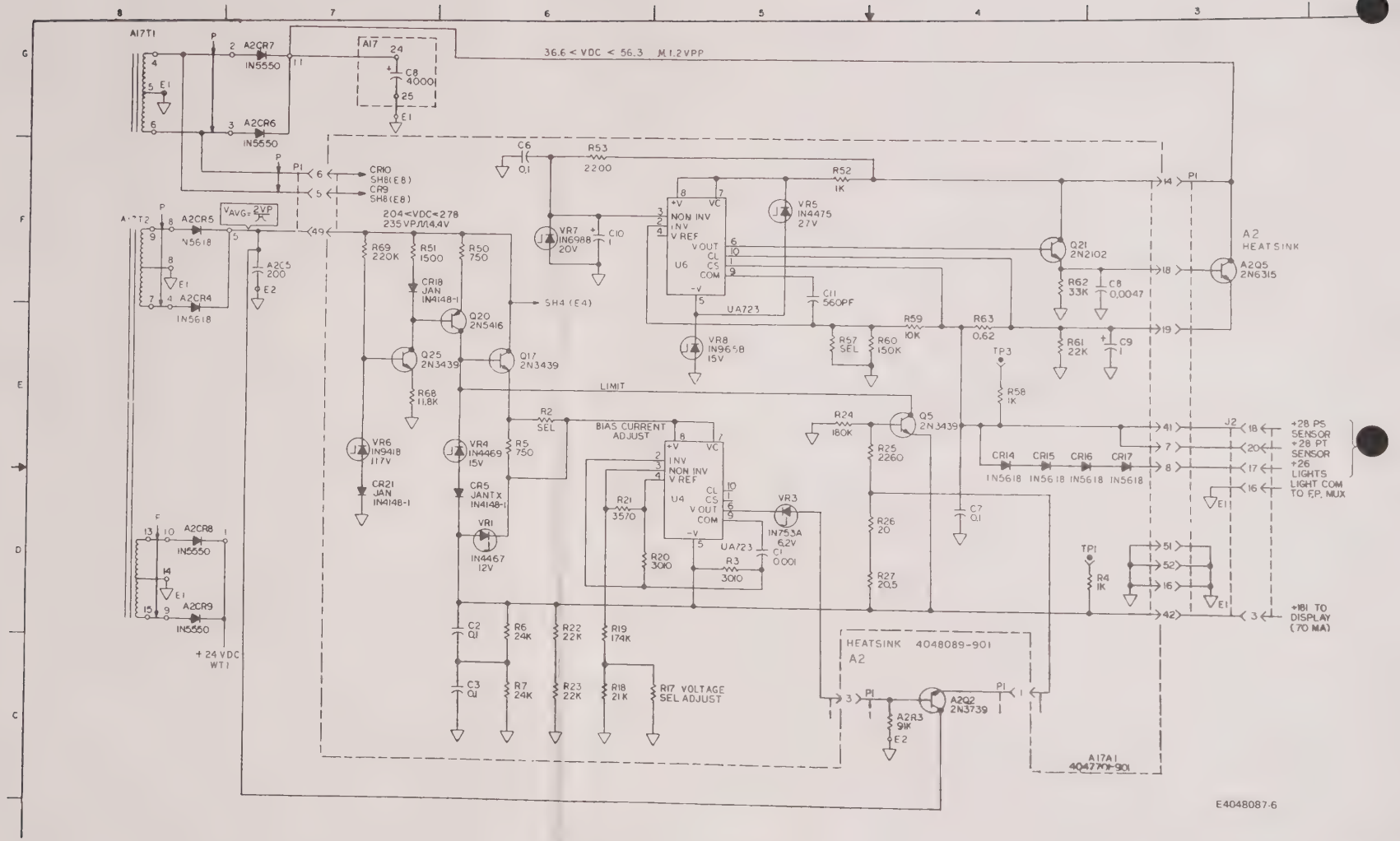

Power Supply A17 Schematic
Figure 4-51 (Sheet 6)

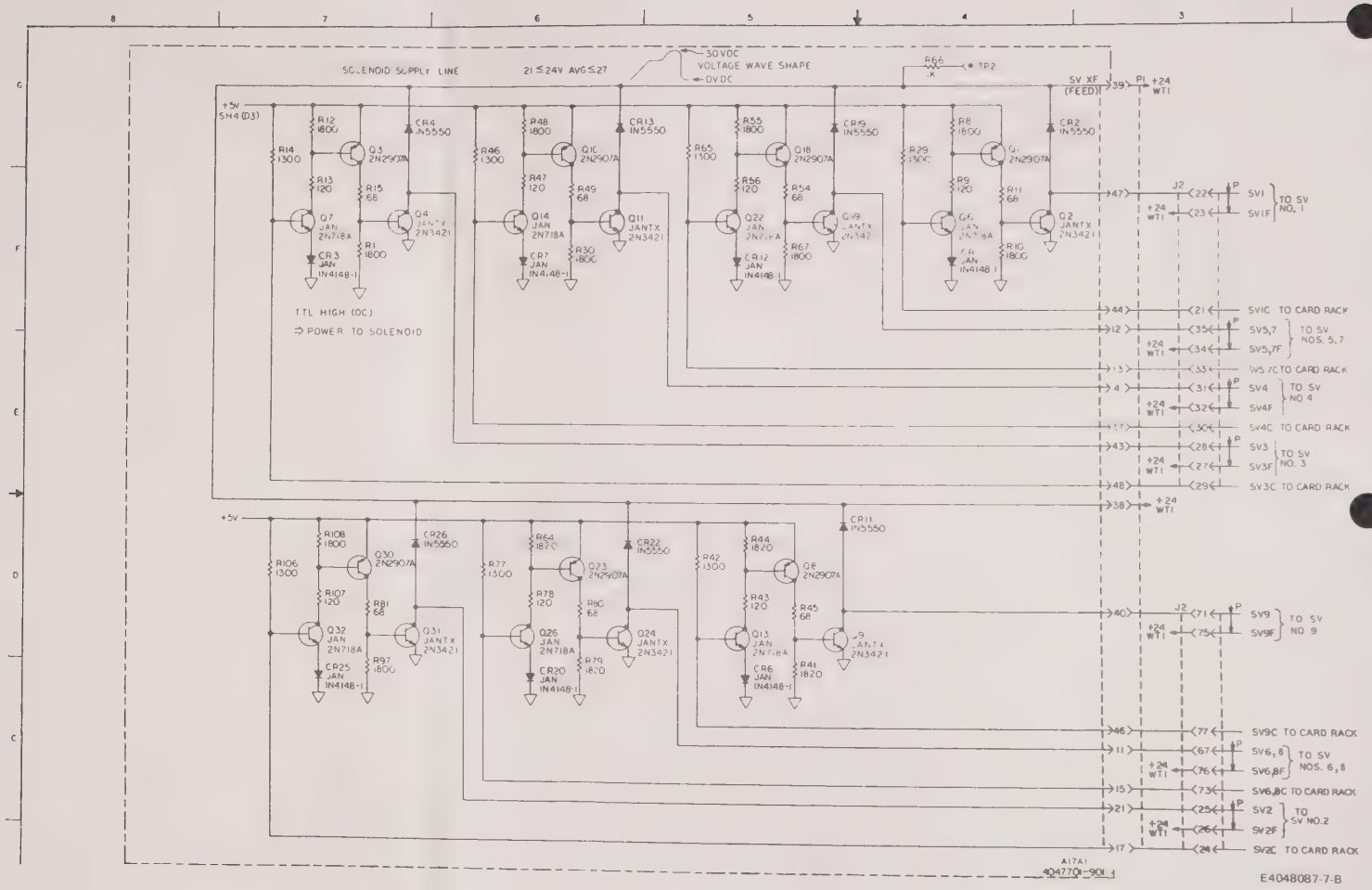

Power Supply A17 Schematic
Figure 4-51 (Sheet 7)

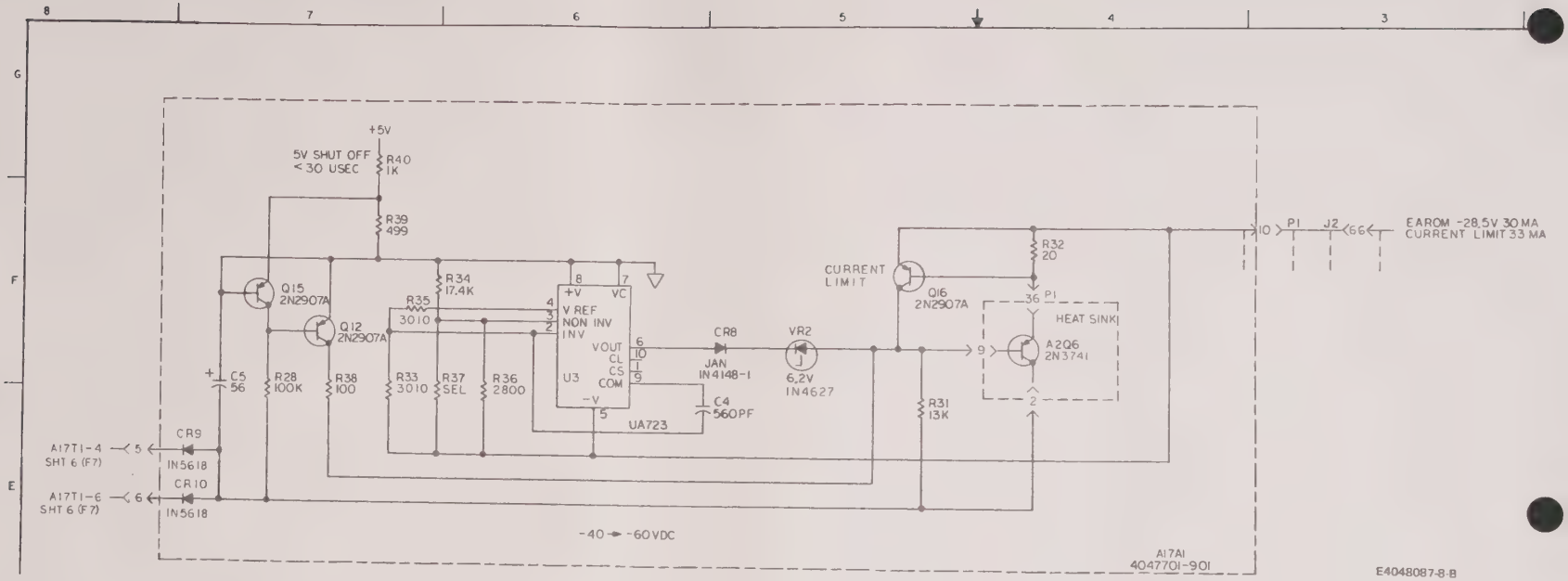

Power Supply A17 Schematic
Figure 4-51 (Sheet 8)

Revision Index (Arrow Designation)	Revision Description	Effectivity

Sensor Assembly Cards A18, A19 Schematic
Figure 4-52 (Sheet 1 of 2)

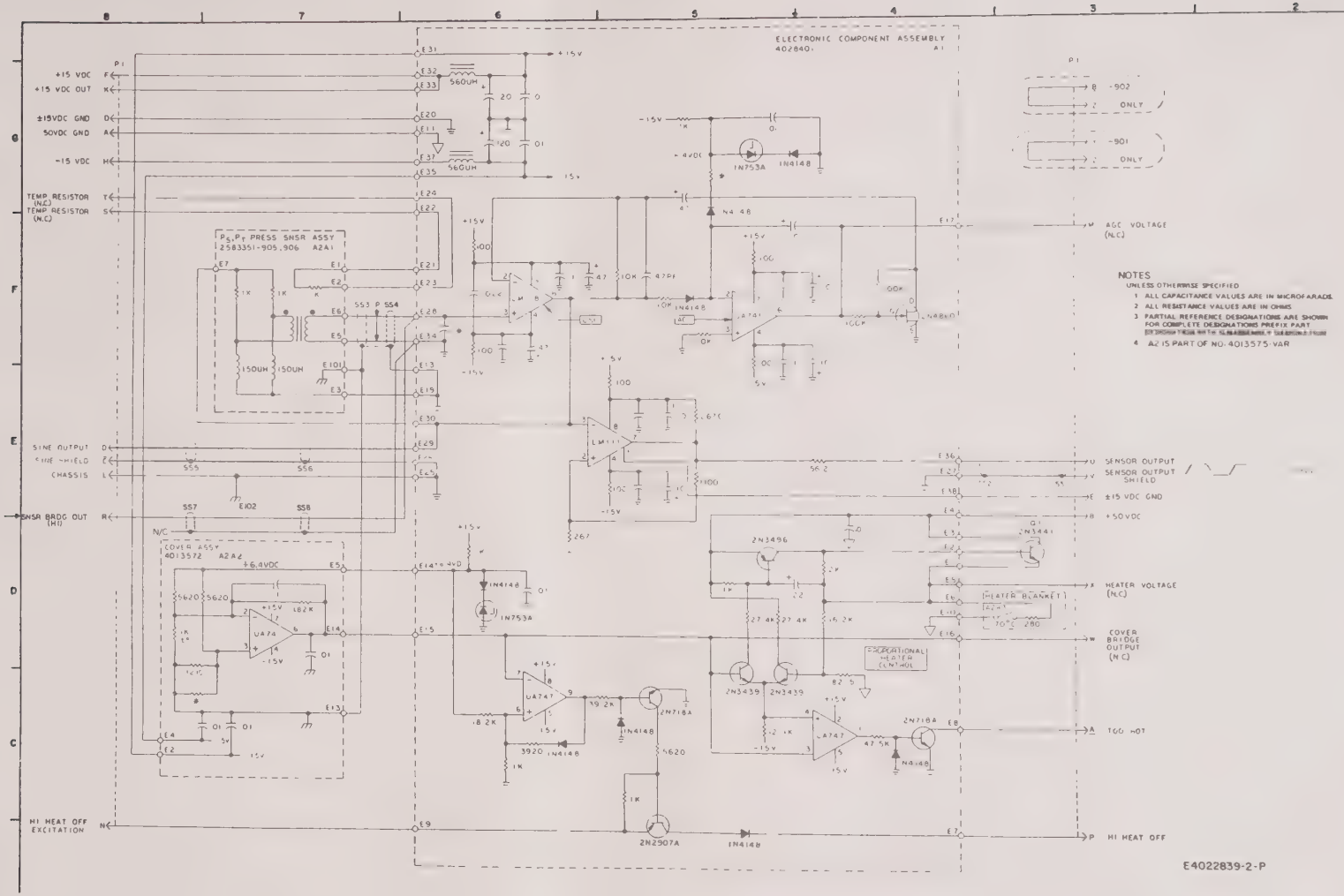

Sensor Assembly Cards A18, A19 Schematic
Figure 4-52 (Sheet 2)

5. Wire Lists

Wire lists for the ADT-222B are provided in tables 4-13 thru 4-16.

FROM PIN	TO COMPONENT-	PIN	SIGNAL NAME	AWG	COLOR
	1A20 E1				
1	1A20J1	W3- 1	GND	22	GY
1	1A20	WT1- 69	CHASSIS GND		
	1A20 E2				
1	1A20	WT1- 70	CHASSIS GND		
1	1A20J1	W3- 2	GND	22	GY
	1A20 E3				
1	1A20	WT1- 71	CHASSIS GND		
1	1A20J1	W3- 3	GND	22	GY
	1A20 E4				
1	1A20	WT1- 72	CHASSIS GND		
1	1A20J1	W3- 4	GND	22	GY
	1A20 J1				
1A	1A20	XA6- 9	SET ATE RTN	28	BK
2A	1A20	XA6- 60	L SET ATE	28	G
3A	1A20	XA8- 79	-28.5VDC	28	G
4A	1A20	XA8- 78	INPUT DATABUS 00	28	G
5A	1A20	XA7- 69	400 HZ	28	G
6A	1A20	XA7- 81	400 HZ RTN	28	BK
1B	1A20	XA6- 9	SET MSR RTN	28	BK
2B	1A20	XA6- 89	L SET MSR	28	G

FROM PIN	TO COMPONENT- PIN			SIGNAL NAME	AWG	COLOR
	1A20 J1					
3B	1A20	XA12-	24	+15VDC FOR CV	28	G
4B	1A20	XA7-	65	L=SV1 CONTROL	28	G
5B	1A20	XA7-	11	CADL BLKO-LNO	28	G
6B	1A20	XA7-	10	CADL BLKO-LNO RTN	28	BK
1C	1A20	XA6-	10	SET M3 RTN	28	BK
2C	1A20	XA6-	77	L SET M3	28	G
3C	1A20	XA12-	52	-15VDC FOR CV	28	G
4C	1A20	XA7-	88	H EQ FINE HEAT ON	28	G
5C	1A20	XA7-	7	CADL BLKO-LN1	28	G
6C	1A20	XA7-	9	CADL BLKO-LN1 RTN	28	BK
2D	1A20	XA8-	24	DI N.O.	28	G
3D	1A20	XA6-	76	L=M3 LIGHT	28	G
4D	1A20	XA9-	69	LOX	28	G
5D	1A20	XA7-	6	CADL BLKO-LN5	28	G
6D	1A20	XA7-	9	CADL BLKO-LN5 RTN	28	BK
2E	1A20	XA8-	21	DI N.C.	28	G
4E	1A20	XA6-	88	H=SRC	28	G
5E	1A20	XA7-	1	CADL BLKO-LN4	28	G
6E	1A20	XA7-	9	CADL BLKO-LN4 RTN	28	BK
1F	1A20	XA11-	44	+15V BAT DISCHARGE	28	G

FROM PIN	TO COMPONENT- PIN		SIGNAL NAME	AWG	COLOR
	1A20 J1				
4F	1A20	XA5- 35	L=SV2 CONTROL	28	G
5F	1A20	XA7- 19	CADL BLK1-LN1	28	G
6F	1A20	XA7- 49	CADL BLK1-LN1 RTN	28	BK
1G	1A20	XA11- 47	-15V BAT DISCHARGE	28	G
4G	1A20	XA6- 72	L=SYS FAIL FP	28	G
5G	1A20	XA5- 63	CADL BLK1-LN2	28	G
6G	1A20	XA7- 10	CADL BLK1-LN2 RTN	28	BK
3H	1A20	XA5- 41	SV9 CONTROL	28	G
4H	1A20	XA9- 60	PS SENSOR 2 HOT	28	G
5H	1A20	XA7- 35	CADL BLK1-LN6	28	G
6H	1A20	XA7- 82	CADL BLK1-LN6 RTN	28	BK
3J	1A20	XA5- 25	L=SV6+SV8 CONTROL	28	G
4J	1A20	XA7- 66	L=SV3 CONTROL	28	G
5J	1A20	XA9- 26	TS2-0 (FP)	28	G
6J	1A20	XA9- 82	TS2-0 RTN	28	BK
1K	1A20	XA8- 51	PT INLET NOZZLE	28	G
2K	1A20	XA8- 9	PT NOZZLE GND	28	G
3K	1A20	XA8- 47	PT EXHAUST NOZZLE	28	G
4K	1A20	XA7- 54	X REG BIT 0 (FP)	28	G
5K	1A20	XA7- 21	CADL BLK1-LN0	28	G

FROM PIN	TO COMPONENT-	PIN	SIGNAL NAME	AWG	COLOR
	1A20 J1				
6K	1A20	XA7- 49	CADL BLK1-LNO RTN	28	BK
1L	1A20	XA8- 53	PS INLET NOZZLE	28	G
2L	1A20	XA8- 10	PS NOZZLE GND	28	G
3L	1A20	XA8- 49	PS EXHAUST NOZZLE	28	G
4L	1A20	XA7- 64	L=SV5+7 CONTROL	28	G
5L	1A20	XA9- 28	TS2-1 (FP)	28	G
6L	1A20	XA9- 9	TS2-1 RTN	28	BK
1M			N/C		
2M			N/C		
3M			N/C		
4M			N/C		
5M			N/C		
6M			N/C		
1N	1A20J1	W2- 5	+5VDC BUSSBAR		
2N	1A20J1	W2- 6	+5VDC BUSSBAR		
3N	1A20J1	W2- 7	+5VDC BUSSBAR		
4N	1A20J1	W2- 8	+5VDC BUSSBAR		
5N	1A20J1	W2- 9	+5VDC BUSSBAR		
6N	1A20J1	W2- 10	+5VDC BUSSBAR		
1P	1A20J1	W3- 5	+5VDC GND BUSSBAR		

Card Rack Wire List
Table 4-13 (cont)

FROM PIN	TO COMPONENT-	PIN	SIGNAL NAME	AWG	COLOR
	1A20 J1				
2P	1A20J1	W3- 6	+5VDC GND BUSSBAR		
3P	1A20J1	W3- 7	+5VDC GND BUSSBAR		
4P	1A20J1	W3- 8	+5VDC GND BUSSBAR		
5P	1A20J1	W3- 9	+5VDC GND BUSSBAR		
6P	1A20J1	W3- 10	+5VDC GND BUSSBAR		
1R			N/C		
2R			N/C		
3R			N/C		
4R			N/C		
5R			N/C		
6R			N/C		
1S	1A20	XA11- 17	AS SENSOR PT V	28	G
2S	1A20	XA11- 24	AS SENSOR PS V	28	G
3S	1A20	XA5- 23	L=SV4 CONTROL	28	G
4S	1A20	XA7- 59	X REG BIT 1 (FP)	28	G
5S	1A20	XA7- 15	CADL BLK1-LN3	28	G
6S	1A20	XA7- 10	CADL BLK1-LN3 RTN	28	BK
1T	1A20	XA11- 18	AS SENSOR PT V GND	28	G
2T	1A20	XA11- 25	AS SENSOR PS V GND	28	G
3T	1A20	XA10- 64	INPUT DATABUS 02	28	G

FROM PIN	TO COMPONENT- PIN			SIGNAL NAME	AWG	COLOR
	1A20 J1					
4T	1A20	XA5-	20	-15CR	28	G
5T	1A20	XA9-	25	INPT ID STROBE(FP)	28	G
6T	1A20	XA9-	9	INPUT ID STROBERTN	28	BK
1U	1A20	XA11-	19	AS SENSOR PT OUT	28	G
2U	1A20	XA11-	26	AS SENSOR PS OUT	28	G
3U	1A20	XA7-	56	X REG BIT 2 (FP)	28	G
4U	1A20	XA8-	74	INPUT DATABUS 01	28	G
5U	1A20	XA9-	21	TS2-2 (FP)	28	G
6U	1A20	XA9-	9	TS2-2 RTN	28	BK
1V	1A20	XA11-	20	AS SENSOR PT OUTRN	28	G
2V	1A20	XA11-	27	AS SENSOR PS OUTRN	28	G
3V	1A20	XA5-	22	+15CR	28	G
4V	1A20	XA7-	52	X REG BIT 3 (FP)	28	G
5V	1A20	XA9-	27	INPT DATA NBL (FP)	28	G
6V	1A20	XA9-	10	INPUT DATA NBL RTN	28	BK
1W	1A20	XA11-	10	AUTO VENT LT HI	28	G
2W	1A20	XA11-	12	BAT LOW LT HI	28	G
3W	1A20	XA5-	62	INPUT DATABUS 03	28	G
4W	1A20	XA8-	14	PS DYNAMIC LT	28	G
5W	1A20	XA12-	8	PT SINE OUTPUT	28	G

FROM PIN	TO COMPONENT- PIN			SIGNAL NAME	AWG	COLOR
	1A20	J1				
6W	1A20	XA12-	7	PT SINE SHIELD	28	BK
1X	1A20	XA11-	50	+BAT CHARGE	28	G
2X	1A20	XA11-	22	+15VDC BAT	28	G
3X	1A20	XA9-	10	COM-CSP	28	G
4X	1A20	XA7-	47	X REG BIT 4 (FP)	28	G
5X	1A20	XA13-	14	PS CV (RED)	26	R
6X	1A20	XA13-	48	PS C.V.(BLK)	26	BK
1Y	1A20	XA11-	51	BAT CHARGE GND	28	G
2Y	1A20	XA11-	1	BAT GND	28	G
3Y	1A20	XA7-	55	X REG BIT 7 (FP)	28	G
4Y	1A20	XA12-	32	+15 CR PT	28	G
5Y	1A20	XA9-	23	TS2-3 (FP)	28	G
6Y	1A20	XA9-	10	TS2-3 RTN	28	BK
1Z	1A20	XA11-	52	-BAT CHARGE	28	G
2Z	1A20	XA11-	49	-15VDC BAT	28	G
3Z	1A20	XA13-	32	+15CR PS	28	G
4Z	1A20	XA9-	60	PT SENSOR 2 HOT	28	G
5Z	1A20	XA7-	5	CADL BLKO-LN2	28	G
6Z	1A20	XA8-	10	CADL BLO-LN2 RTN	28	BK
1*A	1A20	XA11-	11	AUTO VENT LT LOW	28	G

FROM PIN	TO COMPONENT- PIN		SIGNAL NAME	AWG	COLOR
	1A20 J1				
2*A	1A20	XA11- 13	BAT LOW LT LOW	28	G
3*A	1A20	XA9- 64	CSP	28	G
4*A	1A20	XA7- 41	X REG BIT 5 (FP)	28	G
5*A	1A20	XA12- 14	PT CV (RED)	26	R
6*A	1A20	XA12- 48	PT CV (BLK)	26	BK
1*B	1A20	XA9- 87	PS SQUARE OUTPUT	28	G
2*B	1A20	XA9- 82	PS SQ OUT SHIELD	28	G
3*B	1A20	XA7- 43	X REG BIT 6 (FP)	28	G
4*B	1A20	XA12- 36	-15 CR PT	28	G
5*B	1A20	XA7- 3	CADL BLKO-LN3	28	G
6*B	1A20	XA8- 10	CADL BLKO-LN3 RTN	28	BK
1*C	1A20	XA9- 88	PT SQUARE OUTPUT	28	G
2*C	1A20	XA9- 81	PT SQ OUT SHIELD	28	G
3*C	1A20	XA13- 36	-15CR PS	28	G
4*C	1A20	XA8- 13	PT DYNAMIC LT	28	G
5*C	1A20	XA13- 8	PS SINE OUT	28	G
6*C	1A20	XA13- 7	PS SINE SHIELD	28	BK

FROM PIN	TO COMPONENT-	PIN	SIGNAL NAME	AWG	COLOR
1A20 J2					
A	1A20	XA12- 66	EDIGA	28	G
B	1A20	XA12- 73	EDIGA RTN	28	BK
C	1A20	XA5- 51	T.P.BUTTON	28	G
1A20 J3					
1	1A20	XA10- 10	L DIO1	28	G
2	1A20	XA10- 20	L DIO2	28	G
3	1A20	XA10- 22	L DIO3	28	G
4	1A20	XA10- 12	L DIO4	28	G
5	1A20	XA10- 49	L EOI	28	G
6	1A20	XA10- 35	L DAV	28	G
7	1A20	XA10- 55	L NRFD	28	G
8	1A20	XA10- 53	L NDAC	28	G
9	1A20	XA10- 43	L IFC	28	G
10	1A20	XA10- 41	L SRQ	28	G
11	1A20	XA10- 47	L ATTN	28	G
12	1A20	XA11- 73	SHIELD	28	G
13	1A20	XA10- 6	L DIO5	28	G
14	1A20	XA10- 8	L DIO6	28	G
15	1A20	XA10- 39	L DIO7	28	G

Card Rack Wire List
Table 4-13 (cont)

FROM PIN	TO COMPONENT- PIN			SIGNAL NAME	AWG	COLOR
	1A20 J3					
16	1A20	XA6-	83	L DIO8	28	G
17	1A20	XA10-	51	L REN	28	G
18	1A20	XA11-	2	GND (DAV)	28	BK
19	1A20	XA11-	74	GND (NRFD)	28	BK
20	1A20	XA11-	74	GND (NDAC)	28	BK
21	1A20	XA11-	46	GND (IFC)	28	BK
22	1A20	XA11-	46	GND (SRQ)	28	BK
23	1A20	XA11-	45	GND (ATTN)	28	BK
24	1A20	XA11-	73	GND (LOGIC)	28	G
	1A20 J4					
1	1A20	XA10-	35	L DAV	28	G
2	1A20	XA10-	46	GND(DAV)	28	BK
3	1A20	XA10-	22	L DIO3	28	G
4	1A20	XA10-	20	L DIO2	28	G
5	1A20	XA10-	74	GND(NRFD)	28	BK
6	1A20	XA10-	39	L DIO7	28	G
7	1A20	XA10-	41	L SRQ	28	G
8	1A20	XA10-	47	L ATTN	28	G
9	1A20	XA10-	49	L EOI	28	G
10	1A20	XA10-	10	L DIO1	28	G

FROM PIN	TO COMPONENT- PIN		SIGNAL NAME	AWG	COLOR
	1A20 J4				
11	1A20	XA10- 6	L DIO5	28	G
12	1A20	XA10- 8	L DIO6	28	G
13	1A20	XA10- 12	L DIO4	28	G
14	1A20	XA10- 1	GND(NDAC)	28	BK
15	1A20	XA10- 51	L REN	28	G
16	1A20	XA10- 53	L NDAC	28	G
17	1A20	XA10- 55	L NRFD	28	G
18	1A20	XA10- 43	L IFC	28	G
19	1A20	XA10- 1	GND(IFC)	28	BK
20	1A20	XA10- 46	GND(SRQ)	28	BK
21	1A20	XA10- 73	GND (ATTN)	28	BK
22	1A20	XA10- 73	COMMON-6	28	G
23	1A20	XA10- 74	COMMON-7	28	G
24	1A20	XA6- 83	L DIO8	28	G
25	1A20	XA6- 89	L SET MSR	28	G
26	1A20	XA6- 60	L SET ATE	28	G
27	1A20	XA6- 9	SET MSR RTN	28	BK
28	1A20	XA6- 10	SET ATE RTN	28	BK
29	1A20	XA6- 77	L SET M3	28	G
30	1A20	XA6- 10	SET M3 RTN	28	BK

Card Rack Wire List
Table 4-13 (cont)

FROM PIN	TO COMPONENT- PIN		SIGNAL NAME	AWG	COLOR
	1A20 J4				
33	1A20	XA9- 89	PS SENSOR SIG	28	G
34	1A20	XA9- 90	PT SENSOR SIG	28	G
35	1A20	XA6- 61	L=AUTOVENT TEST	28	G
36	1A20	XA12- 17	F TO V OUT PT	28	G
37	1A20	XA13- 17	F TO V OUT PS	28	G
	1A20 S1				
1	1A20	XA5- 51	TP BUTTON BP	28	G
2	1A20	XA6- 81	TP BUTTON BP RTN	28	BK
	1A20 W1				
1	1A20J1	W2- 1	+5	22	W
2	1A20J1	W2- 2	+5	22	W
3	1A20J1	W2- 3	+5	22	W
4	1A20J1	W2- 4	+5	22	W
6	1A20	XA1- 37	+5 BUSSBAR		
7	1A20	XA1- 38	+5 BUSSBAR		
8	1A20	XA2- 45	+5 BUSSBAR		
9	1A20	XA2- 46	+5 BUSSBAR		
10	1A20	XA3- 45	+5 BUSSBAR		
11	1A20	XA3- 46	+5 BUSSBAR		

FROM PIN	TO COMPONENT- PIN			SIGNAL NAME	AWG	COLOR
	1A20	W1				
12	1A20	XA4-	45	+5 BUSSBAR		
13	1A20	XA4-	46	+5 BUSSBAR		
14	1A20	XA5-	45	+5 BUSSBAR		
15	1A20	XA5-	46	+5 BUSSBAR		
16	1A20	XA6-	45	+5 BUSSBAR		
17	1A20	XA6-	46	+5 BUSSBAR		
18	1A20	XA7-	45	+5 BUSSBAR		
19	1A20	XA7-	46	+5 BUSSBAR		
20	1A20	XA8-	45	+5 BUSSBAR		
21	1A20	XA8-	46	+5 BUSSBAR		
22	1A20	XA9-	45	+5 BUSSBAR		
23	1A20	XA9-	46	+5 BUSSBAR		
24	1A20	XA10-	37	+5 BUSSBAR		
25	1A20	XA10-	38	+5 BUSSBAR		
26	1A20	XA11-	37	+5 BUSSBAR		
27	1A20	XA11-	38	+5 BUSSBAR		
28	1A20	XA12-	37	+5 BUSSBAR		
29	1A20	XA12-	38	+5 BUSSBAR		
30	1A20	XA13-	37	+5 BUSSBAR		
31	1A20	XA13-	38	+5 BUSSBAR		

Card Rack Wire List
Table 4-13 (cont)

FROM PIN	TO COMPONENT- PIN		SIGNAL NAME	AWG	COLOR
	1A20 WT1				
1	1A20	XA1- 1	CHASSIS GND		
2	1A20	XA1- 2	CHASSIS GND		
3	1A20	XA1- 73	CHASSIS GND		
4	1A20	XA1- 74	CHASSIS GND		
5	1A20	XA2- 9	CHASSIS GND		
6	1A20	XA2- 10	CHASSIS GND		
7	1A20	XA2- 81	CHASSIS GND		
8	1A20	XA2- 82	CHASSIS GND		
9	1A20	XA3- 9	CHASSIS GND		
10	1A20	XA3- 10	CHASSIS GND		
11	1A20	XA3- 81	CHASSIS GND		
12	1A20	XA3- 82	CHASSIS GND		
13	1A20	XA4- 9	CHASSIS GND		
14	1A20	XA4- 10	CHASSIS GND		
15	1A20	XA4- 81	CHASSIS GND		
16	1A20	XA4- 82	CHASSIS GND		
17	1A20	XA5- 9	CHASSIS GND		
18	1A20	XA5- 10	CHASSIS GND		
19	1A20	XA5- 81	CHASSIS GND		
20	1A20	XA5- 82	CHASSIS GND		

Card Rack Wire List
Table 4-13 (cont)

FROM PIN	TO COMPONENT- PIN		SIGNAL NAME	AWG	COLOR
	1A20 WT1				
21	1A20	XA6- 9	CHASSIS GND		
22	1A20	XA6- 10	CHASSIS GND		
25	1A20	XA6- 81	CHASSIS GND		
26	1A20	XA6- 82	CHASSIS GND		
27	1A20	XA7- 9	CHASSIS GND		
28	1A20	XA7- 10	CHASSIS GND		
29	1A20	XA7- 49	CHASSIS GND		
30	1A20	XA7- 50	CHASSIS GND		
31	1A20	XA7- 81	CHASSIS GND		
32	1A20	XA7- 82	CHASSIS GND		
33	1A20	XA8- 9	CHASSIS GND		
34	1A20	XA8- 10	CHASSIS GND		
37	1A20	XA8- 81	CHASSIS GND		
38	1A20	XA8- 82	CHASSIS GND		
39	1A20	XA9- 9	CHASSIS GND		
40	1A20	XA9- 10	CHASSIS GND		
41	1A20	XA9- 49	CHASSIS GND		
42	1A20	XA9- 50	CHASSIS GND		
43	1A20	XA9- 81	CHASSIS GND		
44	1A20	XA9- 82	CHASSIS GND		

Card Rack Wire List
Table 4-13 (cont)

FROM PIN	TO COMPONENT- PIN			SIGNAL NAME	AWG	COLOR
	1A20	WT1				
45	1A20	XA10-	1	CHASSIS GND		
46	1A20	XA10-	2	CHASSIS GND		
47	1A20	XA10-	45	CHASSIS GND		
48	1A20	XA10-	46	CHASSIS GND		
49	1A20	XA10-	73	CHASSIS GND		
50	1A20	XA10-	74	CHASSIS GND		
51	1A20	XA11-	1	CHASSIS GND		
52	1A20	XA11-	2	CHASSIS GND		
53	1A20	XA11-	45	CHASSIS GND		
54	1A20	XA11-	46	CHASSIS GND		
55	1A20	XA11-	73	CHASSIS GND		
56	1A20	XA11-	74	CHASSIS GND		
57	1A20	XA12-	1	CHASSIS GND		
58	1A20	XA12-	2	CHASSIS GND		
59	1A20	XA12-	45	CHASSIS GND		
60	1A20	XA12-	46	CHASSIS GND		
61	1A20	XA12-	73	CHASSIS GND		
62	1A20	XA12-	74	CHASSIS GND		
63	1A20	XA13-	1	CHASSIS GND		
64	1A20	XA13-	2	CHASSIS GND		

FROM PIN	TO COMPONENT-	PIN	SIGNAL NAME	AWG	COLOR
1A20	WT1				
65	1A20	XA13- 45	CHASSIS GND		
66	1A20	XA13- 46	CHASSIS GND		
67	1A20	XA13- 73	CHASSIS GND		
68	1A20	XA13- 74	CHASSIS GND		
69	1A20	E1- 1	CHASSIS GND		
70	1A20	E2- 1	CHASSIS GND		
71	1A20	E3- 1	CHASSIS GND		
72	1A20	E4- 1	CHASSIS GND		
1A20	XA1				
1	1A20	WT1- 1	CHASSIS GND		
2	1A20	WT1- 2	CHASSIS GND		
3			H TEST 02		
4	1A20	XA2- 75	H LS INSTRUCTION	28	G
5			L LHK SET		
6	1A20	XA2- 51	H 2.1	28	G
7			H TEST 01		
8	1A20	XA3- 50	H RS ENABLE	28	G
9	1A20	XA9- 2	CLK PHAZ 2	28	G
10	1A20	XA9- 6	CLK PHAZ 1	28	G
11	1A20	XA2- 29	L READ IN INSTR	28	G

FROM PIN	TO COMPONENT- PIN		SIGNAL NAME	AWG	COLOR
	1A20 XA1				
12	1A20	XA2- 30	H 1.1 HK	28	G
13			H 3.2		
14	1A20	XA2- 36	H PHI 2	28	G
15	1A20	XA3- 64	H LS ENABLE	28	G
16	1A20	XA2- 63	H RS INSTRUCTION	28	G
17	1A20	XA5- 27	H=DATA IN NBL	28	G
18	1A20	XA4- 85	X-REGISTER 15	28	G
19			L EXTRNL 0 CLK EN		
20	1A20	XA2- 77	INST RGSTR-BIT 1 L	28	G
21	1A20	XA2- 50	H 1.2	28	G
22	1A20	XA2- 67	L STOP INST*	28	G
23	1A20	XA2- 6	L PHI 1	28	G
24	1A20	XA4- 86	S-REGISTER 06	28	G
25			H DISABLE STOP		
26	1A20	XA2- 62	INST RGSTR-BIT 1 H	28	G
28	1A20	XA2- 64	L=RD IND + IJ	28	G
30	1A20	XA2- 8	H=READ INDRCT INST	28	G
31	1A20	XA2- 88	H CJ	28	G
32	1A20	XA2- 43	H MEM TIME SELECT	28	G
33	1A20	XA9- 31	BIT INITIATE	28	G

Card Rack Wire List
Table 4-13 (cont)

FROM PIN	TO COMPONENT- PIN		SIGNAL NAME	AWG	COLOR
	1A20 XA1				
34	1A20	XA6- 68	H MEMORY F.F.	28	G
35	1A20	XA3- 30	H CLEAR P REGISTER	28	G
36	1A20	XA3- 48	L P11	28	G
37	1A20	W1- 6	+5 BUSSBAR		
38	1A20	W1- 7	+5 BUSSBAR		
39	1A20	XA2- 49	H 1.1 I	28	G
40	1A20	XA6- 86	L MR + TEST	28	G
41			L MASTER CLEAR		
42	1A20	XA2- 73	H 3.1	28	G
43	1A20	XA2- 54	H 2.2	28	G
44	1A20	XA6- 47	H INT MEM	28	G
45	1A20	XA4- 8	INCREMENT P-BIT 08	28	G
46	1A20	XA3- 53	P REGISTER BIT 08	28	G
47	1A20	XA3- 43	P REGISTER BIT 09	28	G
48	1A20	XA9- 70	REAL TIME CLOCK	28	G
49	1A20	XA3- 52	P REGISTER BIT 10	28	G
50	1A20	XA2- 31	L 1.1 I	28	G
51	1A20	XA2- 17	H 4.1	28	G
52			L RSM XTRNL MEMORY		
53	1A20	XA3- 23	H S TO P TRANSFER	28	G

FROM PIN	TO COMPONENT- PIN			SIGNAL NAME	AWG	COLOR
	1A20	XA1				
54	1A20	XA2-	3	S REGISTER STROBE	28	G
55	1A20	XA3-	88	X REGISTER 09	28	G
56	1A20	XA2-	74	H RJ INSTRUCTION	28	G
57				L LHK		
58	1A20	XA3-	68	H P TO S TRANSFER	28	G
59	1A20	XA3-	85	X REGISTER 11	28	G
60	1A20	XA3-	87	X REGISTER 10	28	G
61	1A20	XA6-	52	S REGISTER 11	28	G
62	1A20	XA2-	34	L LHK*1.1HK+4.1HK	28	G
63	1A20	XA2-	66	H ENABLE 4.1	28	G
64	1A20	XA3-	83	X REGISTER 08	28	G
65	1A20	XA6-	49	S REGISTER 08	28	G
66	1A20	XA2-	11	L 4.1	28	G
67	1A20	XA2-	5	H STRB S BITS 9/10	28	G
68	1A20	XA2-	72	H READ DIRECT INST	28	G
69	1A20	XA6-	74	S REGISTER 10	28	G
70	1A20	XA6-	50	S REGISTER 09	28	G
71				H 4.2		
72	1A20	XA2-	61	H PHI 1	28	G
73	1A20	WT1-	3	CHASSIS GND		

Card Rack Wire List
Table 4-13 (cont)

FROM PIN	TO COMPONENT-	PIN	SIGNAL NAME	AWG	COLOR
	1A20 XA1				
74	1A20	WT1- 4	CHASSIS GND		
	1A20 XA2				
1	1A20	XA3- 7	MULTIPLEX OUTPUT 3	28	G
2	1A20	XA3- 31	L H INCREMENT PO	28	G
3	1A20	XA3- 42	S REGISTER STROBE	28	G
3	1A20	XA1- 54	S REGISTER STROBE	28	G
4	1A20	XA3- 11	MULTIPLEX OUTPUT 2	28	G
5	1A20	XA1- 67	H STRB S BITS 9/10	28	G
6	1A20	XA1- 23	L PHI 1	28	G
7	1A20	XA3- 67	H ADD ENABLE	28	G
8	1A20	XA1- 30	H=READ INDRCT INST	28	G
8	1A20	XA6- 90	H=READ INDRCT INST	28	G
9	1A20	WT1- 5	CHASSIS GND		
10	1A20	WT1- 6	CHASSIS GND		
11	1A20	XA1- 66	L 4.1	28	G
12	1A20	XA3- 6	L TS1 TO ADDER	28	G
13	1A20	XA3- 20	MULTIPLEX OUTPUT 0	28	G
14	1A20	XA3- 13	ADDRESS RGSTR-A2-3	28	G
15	1A20	XA3- 22	L AND ENABLE	28	G
16	1A20	XA3- 80	ADDRESS RGSTR-A2-2	28	G
17	1A20	XA1- 51	H 4.1	28	G

Card Rack Wire List
Table 4-13 (cont)

FROM PIN	TO COMPONENT- PIN			SIGNAL NAME	AWG	COLOR
	1A20	XA2				
18	1A20	XA3-	3	ADDRESS RGSTR-A1-3	28	G
19	1A20	XA3-	19	MULTIPLEX OUTPUT 1	28	G
20	1A20	XA3-	4	ADDRESS RGSTR-A1-2	28	G
21	1A20	XA3-	73	ADDRESS RGSTR-A2-1	28	G
22	1A20	XA3-	2	ADDRESS RGSTR-A1-1	28	G
23	1A20	XA3-	36	L P TO MUX	28	G
24	1A20	XA3-	12	ADDRESS RGSTR-A1-0	28	G
25	1A20	XA5-	33	L DATA TRANSFER	28	G
26	1A20	XA3-	41	L DATA ENABLE	28	G
27	1A20	XA3-	25	ADDRESS RGSTR-A2-0	28	G
28	1A20	XA3-	15	H ADD FORCE CARRY	28	G
29	1A20	XA1-	11	L READ IN INSTR	28	G
30	1A20	XA1-	12	H 1.1 HK	28	G
31	1A20	XA1-	50	L 1.1 I	28	G
32	1A20	XA4-	7	MULTIPLEX OUTPUT 7	28	G
33	1A20	XA3-	78	H DISABLE TS2	28	G
34	1A20	XA1-	62	L LHK*1.1HK+4.1HK	28	G
35	1A20	XA3-	65	TS1*BIT 11	28	G
36	1A20	XA1-	14	H PHI 2	28	G
36	1A20	XA6-	54	H PHI 2	28	G
37	1A20	XA4-	19	MULTIPLEX OUTPUT 5	28	G

FROM PIN	TO COMPONENT- PIN		SIGNAL NAME	AWG	COLOR
	1A20 XA2				
38	1A20	XA3- 75	MULTIPLEX OUTPUT 8	28	G
39	1A20	XA3- 89	TS1*BIT 10	28	G
40	1A20	XA4- 11	MULTIPLEX OUTPUT 6	28	G
41	1A20	XA5- 68	H=NID	28	G
42	1A20	XA4- 75	MULTIPLEX OUTPUT12	28	G
43	1A20	XA1- 32	H MEM TIME SELECT	28	G
44	1A20	XA4- 90	MULTIPLEX OUTPUT13	28	G
45	1A20	W1- 8	+5 BUSSBAR		
46	1A20	W1- 9	+5 BUSSBAR		
47	1A20	XA4- 49	OUTPUT DATABUS 15	28	G
48	1A20	XA4- 76	MULTIPLEX OUTPUT14	28	G
49	1A20	XA1- 39	H 1.1 I	28	G
50	1A20	XA1- 21	H 1.2	28	G
51	1A20	XA1- 6	H 2.1	28	G
52	1A20	XA4- 69	MULTIPLEX OUTPUT15	28	G
53	1A20	XA3- 24	O-FILL GRAY MUX 00	28	G
54	1A20	XA1- 43	H 2.2	28	G
54	1A20	XA6- 53	H 2.2	28	G
55	1A20	XA3- 21	OUTPUT DATABUS 00	28	G
56			H ALT HOLD		
57	1A20	XA4- 47	O-FILL GRAY MUX 15	28	G

Card Rack Wire List
Table 4-13 (cont)

FROM PIN	TO COMPONENT- PIN		SIGNAL NAME	AWG	COLOR
	1A20 XA2				
58	1A20	XA4- 20	MULTIPLEX OUTPUT 4	28	G
59	1A20	XA4- 65	TS1* BIT 15	28	G
60	1A20	XA3- 90	MULTIPLEX OUTPUT 9	28	G
61	1A20	XA1- 72	H PHI 1	28	G
62	1A20	XA1- 26	INST RGSTR-BIT 1 H	28	G
63	1A20	XA1- 16	H RS INSTRUCTION	28	G
64	1A20	XA1- 28	L=RD IND + IJ	28	G
64	1A20	XA6- 78	L=RD IND + IJ	28	G
65	1A20	XA3- 40	L STROBE XREGISTER	28	G
66	1A20	XA1- 63	H ENABLE 4.1	28	G
67	1A20	XA1- 22	L STOP INST*	28	G
68	1A20	XA3- 76	MULTIPLEX OUTPUT10	28	G
69	1A20	XA3- 79	L WRITE TS2	28	G
70	1A20	XA3- 69	MULTIPLEX OUTPUT11	28	G
71			L DATA REQUEST		
72	1A20	XA1- 68	H READ DIRECT INST	28	G
73	1A20	XA1- 42	H 3.1	28	G
74	1A20	XA4- 72	H RJ INSTRUCTION	28	G
74	1A20	XA1- 56	H RJ INSTRUCTION	28	G
75	1A20	XA1- 4	H LS INSTRUCTION	28	G
76	1A20	XA5- 29	H=DATA INSTR	28	G

FROM PIN	TO COMPONENT-	PIN	SIGNAL NAME	AWG	COLOR
1A20 XA2					
77	1A20 XA1-	20	INST RGSTR-BIT 1 L	28	G
78	1A20 XA3-	38	L SUBTRACT ENABLE	28	G
79			PWB GND N/C		
80	1A20 XA3-	84	L WRITE TS1	28	G
81	1A20 WT1-	7	CHASSIS GND		
82	1A20 WT1-	8	CHASSIS GND		
83			PWB GND N/C		
84			PWB GND N/C		
85			PWB GND N/C		
86			PWB GND N/C		
87			PWB GND N/C		
88	1A20 XA1-	31	H CJ	28	G
1A20 XA3					
1	1A20 XA6-	28	S REGISTER 03	28	G
2	1A20 XA4-	2	ADDRESS RGSTR-A1-1	28	G
2	1A20 XA2-	22	ADDRESS RGSTR-A1-1	28	G
3	1A20 XA4-	3	ADDRESS RGSTR-A1-3	28	G
3	1A20 XA2-	18	ADDRESS RGSTR-A1-3	28	G
4	1A20 XA4-	4	ADDRESS RGSTR-A1-2	28	G
4	1A20 XA2-	20	ADDRESS RGSTR-A1-2	28	G
5	1A20 XA4-	15	ADD CARRY FR BIT03	28	G

FROM PIN	TO COMPONENT- PIN			SIGNAL NAME	AWG	COLOR
	1A20	XA3				
6	1A20	XA4-	6	L TS1 TO ADDER	28	G
6	1A20	XA2-	12	L TS1 TO ADDER	28	G
7	1A20	XA2-	1	MULTIPLEX OUTPUT 3	28	G
8	1A20	XA4-	31	INCREMENT P-BIT 04	28	G
9	1A20	WT1-	9	CHASSIS GND		
10	1A20	WT1-	10	CHASSIS GND		
11	1A20	XA2-	4	MULTIPLEX OUTPUT 2	28	G
12	1A20	XA4-	12	ADDRESS RGSTR-A1-0	28	G
12	1A20	XA2-	24	ADDRESS RGSTR-A1-0	28	G
13	1A20	XA4-	13	ADDRESS RGSTR-A2-3	28	G
13	1A20	XA2-	14	ADDRESS RGSTR-A2-3	28	G
14	1A20	XA5-	57	X REGISTER 00	28	G
15	1A20	XA2-	28	H ADD FORCE CARRY	28	G
16				TS2*BIT 0		
17	1A20	XA5-	36	X REGISTER 03	28	G
18	1A20	XA5-	59	X REGISTER 01	28	G
19	1A20	XA2-	19	MULTIPLEX OUTPUT 1	28	G
20	1A20	XA2-	13	MULTIPLEX OUTPUT 0	28	G
21	1A20	XA5-	64	TS2-00	28	G
21	1A20	XA2-	55	OUTPUT DATABUS 00	28	G
22	1A20	XA4-	22	L AND ENABLE	28	G
22	1A20	XA2-	15	L AND ENABLE	28	G
23	1A20	XA4-	23	H S TO P TRANSFER	28	G
23	1A20	XA1-	53	H S TO P TRANSFER	28	G

Card Rack Wire List
Table 4-13 (cont)

FROM PIN	TO COMPONENT- PIN			SIGNAL NAME	AWG	COLOR
	1A20	XA3				
24	1A20	XA2-	53	O-FILL GRAY MUX 00	28	G
25	1A20	XA4-	25	ADDRESS RGSTR-A2-0	28	G
25	1A20	XA2-	27	ADDRESS RGSTR-A2-0	28	G
26	1A20	XA5-	52	TS2-03	28	G
28	1A20	XA5-	69	X REGISTER 02	28	G
29	1A20	XA5-	60	TS2-01	28	G
30	1A20	XA4-	30	H CLEAR P REGISTER	28	G
30	1A20	XA1-	35	H CLEAR P REGISTER	28	G
31	1A20	XA2-	2	L H INCREMENT PO	28	G
32	1A20	XA6-	56	S REGISTER 01	28	G
33	1A20	XA4-	16	TS2*BIT 04	28	G
34	1A20	XA5-	50	INPUT DATABUS 00	28	G
35	1A20	XA5-	56	TS2-02	28	G
36	1A20	XA4-	36	L P TO MUX	28	G
36	1A20	XA2-	23	L P TO MUX	28	G
37	1A20	XA5-	58	INPUT DATABUS 02	28	G
38	1A20	XA4-	38	L SUBTRACT ENABLE	28	G
38	1A20	XA2-	78	L SUBTRACT ENABLE	28	G
39	1A20	XA5-	62	INPUT DATABUS 03	28	G
40	1A20	XA4-	40	L STROBE XREGISTER	28	G
40	1A20	XA2-	65	L STROBE XREGISTER	28	G
41	1A20	XA4-	41	L DATA ENABLE	28	G
41	1A20	XA2-	26	L DATA ENABLE	28	G

FROM PIN	TO COMPONENT-	PIN	SIGNAL NAME	AWG	COLOR
	1A20 XA3				
42	1A20	XA4- 42	S REGISTER STROBE	28	G
42	1A20	XA2- 3	S REGISTER STROBE	28	G
43	1A20	XA1- 47	P REGISTER BIT 09	28	G
44	1A20	XA5- 54	INPUT DATABUS 01	28	G
45	1A20	W1- 10	+5 BUSSBAR		
46	1A20	W1- 11	+5 BUSSBAR		
47	1A20	XA4- 61	TS2* BIT 12	28	G
48	1A20	XA1- 36	L P11	28	G
49	1A20	XA5- 74	TS2-11	28	G
50	1A20	XA4- 50	H RS ENABLE	28	G
50	1A20	XA1- 8	H RS ENABLE	28	G
52	1A20	XA1- 49	P REGISTER BIT 10	28	G
53	1A20	XA1- 46	P REGISTER BIT 08	28	G
54	1A20	XA5- 84	TS2-09	28	G
55	1A20	XA5- 80	INPUT DATABUS 10	28	G
56			ID RESISTOR		
57	1A20	XA4- 24	TS1*BIT 03	28	G
58	1A20	XA5- 86	INPUT DATABUS 11	28	G
59	1A20	XA5- 72	INPUT DATABUS 08	28	G
60	1A20	XA5- 76	INPUT DATABUS 09	28	G
61	1A20	XA4- 33	TS2*BIT 08	28	G

FROM PIN	TO COMPONENT- PIN			SIGNAL NAME	AWG	COLOR
	1A20	XA3				
62	1A20	XA4-	57	TS1*BIT 07	28	G
63	1A20	XA5-	88	TS2-08	28	G
64	1A20	XA4-	64	H LS ENABLE	28	G
64	1A20	XA1-	15	H LS ENABLE	28	G
65	1A20	XA4-	62	TS1*BIT 11	28	G
65	1A20	XA2-	35	TS1*BIT 11	28	G
67	1A20	XA4-	67	H ADD ENABLE	28	G
67	1A20	XA2-	7	H ADD ENABLE	28	G
68	1A20	XA4-	68	H P TO S TRANSFER	28	G
68	1A20	XA1-	58	H P TO S TRANSFER	28	G
69	1A20	XA2-	70	MULTIPLEX OUTPUT11	28	G
70	1A20	XA5-	78	TS2-10	28	G
71	1A20	XA4-	74	ADD CARRY FR BIT11	28	G
72	1A20	XA3-	81	GND UNUSED PINS A4	28	G
73	1A20	XA4-	73	ADDRESS RGSTR-A2-1	28	G
73	1A20	XA2-	21	ADDRESS RGSTR-A2-1	28	G
74	1A20	XA4-	5	ADD CARRY FR BIT07	28	G
75	1A20	XA2-	38	MULTIPLEX OUTPUT 8	28	G
76	1A20	XA2-	68	MULTIPLEX OUTPUT10	28	G
77	1A20	XA6-	58	S REGISTER 00	28	G
78	1A20	XA4-	78	H DISABLE TS2	28	G
78	1A20	XA2-	33	H DISABLE TS2	28	G
79	1A20	XA4-	79	L WRITE TS2	28	G
79	1A20	XA2-	69	L WRITE TS2	28	G

FROM PIN	TO COMPONENT- PIN			SIGNAL NAME	AWG	COLOR
	1A20	XA3				
80	1A20	XA4-	80	ADDRESS RGSTR-A2-2	28	G
80	1A20	XA2-	16	ADDRESS RGSTR-A2-2	28	G
81	1A20	XA3-	72	GND UNUSED PINS A4	28	G
81	1A20	WT1-	11	CHASSIS GND		
82	1A20	WT1-	12	CHASSIS GND		
83	1A20	XA5-	44	X REGISTER 08	28	G
83	1A20	XA1-	64	X REGISTER 08	28	G
84	1A20	XA4-	84	L WRITE TS1	28	G
84	1A20	XA2-	80	L WRITE TS1	28	G
85	1A20	XA5-	70	X REGISTER 11	28	G
85	1A20	XA1-	59	X REGISTER 11	28	G
86	1A20	XA6-	27	S REGISTER 02	28	G
87	1A20	XA5-	42	X REGISTER 10	28	G
87	1A20	XA1-	60	X REGISTER 10	28	G
88	1A20	XA5-	55	X REGISTER 09	28	G
88	1A20	XA1-	55	X REGISTER 09	28	G
89	1A20	XA2-	39	TS1*BIT 10	28	G
90	1A20	XA2-	60	MULTIPLEX OUTPUT 9	28	G

FROM PIN	TO COMPONENT- PIN			SIGNAL NAME	AWG	COLOR
	1A20	XA4				
1	1A20	XA6-	29	S REGISTER 07	28	G
2	1A20	XA3-	2	ADDRESS RGSTR-A1-1	28	G
3	1A20	XA3-	3	ADDRESS RGSTR-A1-3	28	G
4	1A20	XA3-	4	ADDRESS RGSTR-A1-2	28	G
5	1A20	XA3-	74	ADD CARRY FR BIT07	28	G
6	1A20	XA3-	6	L TS1 TO ADDER	28	G
7	1A20	XA2-	32	MULTIPLEX OUTPUT 7	28	G
8	1A20	XA1-	45	INCREMENT P-BIT 08	28	G
9	1A20	WT1-	13	CHASSIS GND		
10	1A20	WT1-	14	CHASSIS GND		
11	1A20	XA2-	40	MULTIPLEX OUTPUT 6	28	G
12	1A20	XA3-	12	ADDRESS RGSTR-A1-0	28	G
13	1A20	XA3-	13	ADDRESS RGSTR-A2-3	28	G
14	1A20	XA5-	38	X REGISTER 04	28	G
15	1A20	XA3-	5	ADD CARRY FR BIT03	28	G
16	1A20	XA3-	33	TS2*BIT 04	28	G
17	1A20	XA5-	66	X REGISTER 07	28	G
18	1A20	XA5-	40	X REGISTER 05	28	G
19	1A20	XA2-	37	MULTIPLEX OUTPUT 5	28	G
20	1A20	XA2-	58	MULTIPLEX OUTPUT 4	28	G

FROM PIN	TO COMPONENT- PIN		SIGNAL NAME	AWG	COLOR
1A20 XA4					
21	1A20	XA5- 49	TS2-04	28	G
22	1A20	XA3- 22	L AND ENABLE	28	G
23	1A20	XA3- 23	H S TO P TRANSFER	28	G
24	1A20	XA3- 57	TS1*BIT 03	28	G
25	1A20	XA3- 25	ADDRESS RGSTR-A2-0	28	G
26	1A20	XA5- 28	TS2-07	28	G
28	1A20	XA5- 48	X REGISTER 06	28	G
29	1A20	XA5- 37	TS2-05	28	G
30	1A20	XA3- 30	H CLEAR P REGISTER	28	G
31	1A20	XA3- 8	INCREMENT P-BIT 04	28	G
32	1A20	XA6- 51	S REGISTER 05	28	G
33	1A20	XA3- 61	TS2*BIT 08	28	G
34	1A20	XA5- 26	INPUT DATABUS 04	28	G
35	1A20	XA5- 32	TS2-06	28	G
36	1A20	XA3- 36	L P TO MUX	28	G
37	1A20	XA5- 34	INPUT DATABUS 06	28	G
38	1A20	XA3- 38	L SUBTRACT ENABLE	28	G
39	1A20	XA5- 39	INPUT DATABUS 07	28	G
40	1A20	XA3- 40	L STROBE XREGISTER	28	G
41	1A20	XA3- 41	L DATA ENABLE	28	G

FROM PIN	TO COMPONENT- PIN			SIGNAL NAME	AWG	COLOR
	1A20	XA4				
42	1A20	XA3-	42	S REGISTER STROBE	28	G
43	1A20	XA4-	48	GND UNUSED PINS A4	28	G
44	1A20	XA5-	30	INPUT DATABUS 05	28	G
45	1A20	W1-	12	+5 BUSSBAR		
46	1A20	W1-	13	+5 BUSSBAR		
47	1A20	XA2-	57	0-FILL GRAY MUX 15	28	G
48	1A20	XA4-	52	GND UNUSED PINS A4	28	G
48	1A20	XA4-	43	GND UNUSED PINS A4	28	G
49	1A20	XA2-	47	OUTPUT DATABUS 15	28	G
49	1A20	XA5-	4	TS2-15	28	G
50	1A20	XA3-	50	H RS ENABLE	28	G
52	1A20	XA4-	53	GND UNUSED PINS A4	28	G
52	1A20	XA4-	48	GND UNUSED PINS A4	28	G
53	1A20	XA4-	81	GND UNUSED PINS A4	28	G
53	1A20	XA4-	52	GND UNUSED PINS A4	28	G
54	1A20	XA5-	16	TS2-13	28	G
55	1A20	XA5-	12	INPUT DATABUS 14	28	G
56				ID RESISTOR		
57	1A20	XA3-	62	TS1*BIT 07	28	G
58	1A20	XA5-	15	INPUT DATABUS 15	28	G
59	1A20	XA5-	2	INPUT DATABUS 12	28	G
60	1A20	XA5-	6	INPUT DATABUS 13	28	G

Card Rack Wire List
Table 4-13 (cont)

FROM PIN	TO COMPONENT- PIN		SIGNAL NAME	AWG	COLOR
	1A20 XA4				
61	1A20	XA3- 47	TS2* BIT 12	28	G
62	1A20	XA3- 65	TS1*BIT 11	28	G
63	1A20	XA5- 24	TS2-12	28	G
64	1A20	XA3- 64	H LS ENABLE	28	G
65	1A20	XA2- 59	TS1* BIT 15	28	G
67	1A20	XA3- 67	H ADD ENABLE	28	G
68	1A20	XA3- 68	H P TO S TRANSFER	28	G
69	1A20	XA2- 52	MULTIPLEX OUTPUT15	28	G
70	1A20	XA5- 8	TS2-14	28	G
71			ADD CARRY N/C		
72	1A20	XA2- 74	H RJ INSTRUCTION	28	G
73	1A20	XA3- 73	ADDRESS RGSTR-A2-1	28	G
74	1A20	XA3- 71	ADD CARRY FR BIT11	28	G
75	1A20	XA2- 42	MULTIPLEX OUTPUT12	28	G
76	1A20	XA2- 48	MULTIPLEX OUTPUT14	28	G
77	1A20	XA6- 55	S REGISTER 04	28	G
78	1A20	XA3- 78	H DISABLE TS2	28	G
79	1A20	XA3- 79	L WRITE TS2	28	G
80	1A20	XA3- 80	ADDRESS RGSTR-A2-2	28	G
81	1A20	XA4- 53	GND UNUSED PINS A4	28	G
81	1A20	WT1- 15	CHASSIS GND		

Card Rack Wire List
Table 4-13 (cont)

FROM PIN	TO COMPONENT-	PIN	SIGNAL NAME	AWG	COLOR
1A20 XA4					
82	1A20	WT1- 16	CHASSIS GND		
83	1A20	XA6- 69	X REGISTER 12	28	G
84	1A20	XA3- 84	L WRITE TS1	28	G
85	1A20	XA1- 18	X-REGISTER 15	28	G
86	1A20	XA6- 30	S-REGISTER 06	28	G
86	1A20	XA1- 24	S-REGISTER 06	28	G
87			X REGISTER 14		
88	1A20	XA6- 70	X REGISTER 13	28	G
89			TS1*BIT 14		
90	1A20	XA2- 44	MULTIPLEX OUTPUT13	28	G
1A20 XA5					
1	1A20	XA7- 86	H=MR	28	G
2	1A20	XA6- 21	INPUT DATABUS 12	28	G
2	1A20	XA4- 59	INPUT DATABUS 12	28	G
3	1A20	XA7- 31	ANALOG INPUT	28	G
4	1A20	XA4- 49	TS2-15	28	G
4	1A20	XA8- 55	TS2-15	28	G
5	1A20	XA8- 44	H=IDE	28	G
6	1A20	XA6- 22	INPUT DATABUS 13	28	G
6	1A20	XA4- 60	INPUT DATABUS 13	28	G
7	1A20	XA12- 69	PT I LG ENABLE	28	G
8	1A20	XA4- 70	TS2-14	28	G
8	1A20	XA8- 57	TS2-14	28	G

FROM PIN	TO COMPONENT- PIN	SIGNAL NAME	AWG	COLOR
1A20 XA5				
9	1A20 WT1- 17	CHASSIS GND		
10	1A20 WT1- 18	CHASSIS GND		
11	1A20 XA13- 69	PS I LG ENABLE	28	G
12	1A20 XA6- 19	INPUT DATABUS 14	28	G
12	1A20 XA4- 55	INPUT DATABUS 14	28	G
13	1A20 XA7- 75	L DAL 1	28	G
15	1A20 XA6- 20	INPUT DATABUS 15	28	G
15	1A20 XA4- 58	INPUT DATABUS 15	28	G
16	1A20 XA4- 54	TS2-13	28	G
16	1A20 XA8- 60	TS2-13	28	G
20	1A20 J1- 4T	-15CR	28	G
20	1A20 XA7- 44	-15CR	28	G
21	1A20 XA12- 67	IDIGA(D/A)	28	G
22	1A20 J1- 3V	+15CR	28	G
22	1A20 XA7- 40	+15VDC	28	G
23	1A20 J1- 3S	L=SV4 CONTROL	28	G
24	1A20 XA4- 63	TS2-12	28	G
24	1A20 XA8- 59	TS2-12	28	G
25	1A20 J1- 3J	L=SV6+SV8 CONTROL	28	G
26	1A20 XA6- 8	INPUT DATABUS 04	28	G
26	1A20 XA4- 34	INPUT DATABUS 04	28	G
27	1A20 XA1- 17	H=DATA IN NBL	28	G
28	1A20 XA4- 26	TS2-07	28	G
28	1A20 XA7- 85	TS2-07	28	G

FROM PIN	TO COMPONENT- PIN		SIGNAL NAME	AWG	COLOR
	1A20	XA5			
29	1A20	XA2- 76	H=DATA INSTR	28	G
30	1A20	XA6- 5	INPUT DATABUS 05	28	G
30	1A20	XA4- 44	INPUT DATABUS 05	28	G
31	1A20	XA9- 71	L DAL	28	G
32	1A20	XA4- 35	TS2-06	28	G
32	1A20	XA7- 83	TS2-06	28	G
33	1A20	XA2- 25	L DATA TRANSFER	28	G
33	1A20	XA7- 37	L DATA TRANSFER	28	G
34	1A20	XA6- 6	INPUT DATABUS 06	28	G
34	1A20	XA4- 37	INPUT DATABUS 06	28	G
35	1A20	J1- 4F	L=SV2 CONTROL	28	G
36	1A20	XA3- 17	X REGISTER 03	28	G
36	1A20	XA7- 48	X REGISTER 03	28	G
37	1A20	XA4- 29	TS2-05	28	G
37	1A20	XA7- 77	TS2-05	28	G
38	1A20	XA4- 14	X REGISTER 04	28	G
38	1A20	XA7- 4	X REGISTER 04	28	G
39	1A20	XA6- 3	INPUT DATABUS 07	28	G
39	1A20	XA4- 39	INPUT DATABUS 07	28	G
40	1A20	XA4- 18	X REGISTER 05	28	G
40	1A20	XA7- 2	X REGISTER 05	28	G
41	1A20	J1- 3H	SV9 CONTROL	28	G
42	1A20	XA3- 87	X REGISTER 10	28	G
42	1A20	XA7- 34	X REGISTER 10	28	G
43	1A20	XA12- 29	L=EXT DYN ENA	28	G

FROM PIN	TO COMPONENT- PIN		SIGNAL NAME	AWG	COLOR
	1A20 XA5				
44	1A20	XA3- 83	X REGISTER 08	28	G
44	1A20	XA7- 38	X REGISTER 08	28	G
45	1A20	W1- 14	+5 BUSSBAR		
46	1A20	W1- 15	+5 BUSSBAR		
47	1A20	XA9- 48	TPB FLAG	28	G
48	1A20	XA4- 28	X REGISTER 06	28	G
48	1A20	XA7- 14	X REGISTER 06	28	G
49	1A20	XA4- 21	TS2-04	28	G
49	1A20	XA7- 79	TS2-04	28	G
50	1A20	XA6- 12	INPUT DATABUS 00	28	G
50	1A20	XA3- 34	INPUT DATABUS 00	28	G
51	1A20	J2- C	T.P.BUTTON	28	G
51	1A20	S1- 1	TP BUTTON BP	28	G
52	1A20	XA3- 26	TS2-03	28	G
52	1A20	XA7- 27	TS2-03	28	G
53	1A20	XA7- 42	CADL BLK1-LN7	28	G
54	1A20	XA6- 11	INPUT DATABUS 01	28	G
54	1A20	XA3- 44	INPUT DATABUS 01	28	G
55	1A20	XA3- 88	X REGISTER 09	28	G
55	1A20	XA7- 36	X REGISTER 09	28	G
56	1A20	XA3- 35	TS2-02	28	G
56	1A20	XA7- 23	TS2-02	28	G
57	1A20	XA3- 14	X REGISTER 00	28	G
57	1A20	XA7- 57	X REGISTER 00	28	G
58	1A20	XA6- 14	INPUT DATABUS 02	28	G
58	1A20	XA3- 37	INPUT DATABUS 02	28	G

FROM PIN	TO COMPONENT- PIN		SIGNAL NAME	AWG	COLOR
	1A20	XA5			
59	1A20	XA3- 18	X REGISTER 01	28	G
59	1A20	XA7- 53	X REGISTER 01	28	G
60	1A20	XA3- 29	TS2-01	28	G
60	1A20	XA7- 25	TS2-01	28	G
61	1A20	XA6- 71	L MASTER RESET	28	G
62	1A20	XA6- 7	INPUT DATABUS 03	28	G
62	1A20	J1- 3W	INPUT DATABUS 03	28	G
62	1A20	XA3- 39	INPUT DATABUS 03	28	G
63	1A20	XA7- 17	CADL BLK1-LN2	28	G
63	1A20	J1- 5G	CADL BLK1-LN2	28	G
64	1A20	XA3- 21	TS2-00	28	G
64	1A20	XA7- 29	TS2-00	28	G
65	1A20	XA12- 27	L=INT DYN ENA	28	G
66	1A20	XA4- 17	X REGISTER 07	28	G
66	1A20	XA7- 16	X REGISTER 07	28	G
67	1A20	XA7- 21	CADL BLK1-LN0	28	G
68	1A20	XA2- 41	H=NID	28	G
68	1A20	XA8- 48	H=NID	28	G
69	1A20	XA3- 28	X REGISTER 02	28	G
69	1A20	XA7- 51	X REGISTER 02	28	G
70	1A20	XA3- 85	X REGISTER 11	28	G
70	1A20	XA7- 32	X REGISTER 11	28	G
71	1A20	XA7- 30	CADL BLK1-LN15	28	G
72	1A20	XA6- 23	INPUT DATABUS 08	28	G
72	1A20	XA3- 59	INPUT DATABUS 08	28	G
73	1A20	XA7- 24	CADL BLK1-LN13	28	G

FROM PIN	TO COMPONENT- PIN			SIGNAL NAME	AWG	COLOR
	1A20	XA5				
74	1A20	XA3-	49	TS2-11	28	G
74	1A20	XA7-	71	TS2-11	28	G
75	1A20	XA7-	18	CADL BLKO-LN8	28	G
76	1A20	XA6-	26	INPUT DATABUS 09	28	G
76	1A20	XA3-	60	INPUT DATABUS 09	28	G
77	1A20	XA7-	26	CADL BLK1-LN14	28	G
78	1A20	XA3-	70	TS2-10	28	G
78	1A20	XA7-	74	TS2-10	28	G
79	1A20	XA6-	62	CADL BLKO-LN6	28	G
80	1A20	XA6-	25	INPUT DATABUS 10	28	G
80	1A20	XA3-	55	INPUT DATABUS 10	28	G
81	1A20	WT1-	19	CHASSIS GND		
82	1A20	WT1-	20	CHASSIS GND		
83	1A20	XA6-	75	CADL BLKO-LN14	28	G
84	1A20	XA3-	54	TS2-09	28	G
84	1A20	XA7-	76	TS2-09	28	G
85	1A20	XA6-	66	CADL BLKO-LN7	28	G
86	1A20	XA6-	24	INPUT DATABUS 11	28	G
86	1A20	XA3-	58	INPUT DATABUS 11	28	G
87	1A20	XA6-	57	CADL BLKO-LN5	28	G
88	1A20	XA3-	63	TS2-08	28	G
88	1A20	XA7-	73	TS2-08	28	G
89	1A20	XA7-	3	CADL BLKO-LN3	28	G
90	1A20	XA7-	12	CADL BLKO-LN15	28	G

FROM PIN	TO COMPONENT- PIN			SIGNAL NAME	AWG	COLOR
	1A20	XA6				
1				PAGE BIT 0 N/C		
3	1A20	XA8-	77	INPUT DATABUS 07	28	G
3	1A20	XA5-	39	INPUT DATABUS 07	28	G
4				PAGE BIT 1 N/C		
5	1A20	XA8-	80	INPUT DATABUS 05	28	G
5	1A20	XA5-	30	INPUT DATABUS 05	28	G
6	1A20	XA8-	76	INPUT DATABUS 06	28	G
6	1A20	XA5-	34	INPUT DATABUS 06	28	G
7	1A20	XA8-	73	INPUT DATABUS 03	28	G
7	1A20	XA5-	62	INPUT DATABUS 03	28	G
8	1A20	XA8-	75	INPUT DATABUS 04	28	G
8	1A20	XA5-	26	INPUT DATABUS 04	28	G
9	1A20	J1-	1A	SET ATE RTN	28	BK
9	1A20	J1-	1B	SET MSR RTN	28	BK
9	1A20	J4-	27	SET MSR RTN	28	BK
9	1A20	WT1-	21	CHASSIS GND		
10	1A20	J1-	1C	SET M3 RTN	28	BK
10	1A20	J4-	28	SET ATE RTN	28	BK
10	1A20	J4-	30	SET M3 RTN	28	BK
10	1A20	WT1-	22	CHASSIS GND		
11	1A20	XA8-	74	INPUT DATABUS 01	28	G
11	1A20	XA5-	54	INPUT DATABUS 01	28	G
12	1A20	XA8-	78	INPUT DATABUS 00	28	G
12	1A20	XA5-	50	INPUT DATABUS 00	28	G
14	1A20	XA8-	71	INPUT DATABUS 02	28	G
14	1A20	XA5-	58	INPUT DATABUS 02	28	G
16	1A20	XA8-	34	L=PADLOCK (C1)	28	G

FROM PIN	TO COMPONENT- PIN			SIGNAL NAME	AWG	COLOR
	1A20	XA6				
19	1A20	XA8-	65	INPUT DATABUS 14	28	G
19	1A20	XA5-	12	INPUT DATABUS 14	28	G
20	1A20	XA8-	69	INPUT DATABUS 15	28	G
20	1A20	XA5-	15	INPUT DATABUS 15	28	G
21	1A20	XA8-	68	INPUT DATABUS 12	28	G
21	1A20	XA5-	2	INPUT DATABUS 12	28	G
22	1A20	XA8-	72	INPUT DATABUS 13	28	G
22	1A20	XA5-	6	INPUT DATABUS 13	28	G
23	1A20	XA8-	67	INPUT DATABUS 08	28	G
23	1A20	XA5-	72	INPUT DATABUS 08	28	G
24	1A20	XA8-	66	INPUT DATABUS 11	28	G
24	1A20	XA5-	86	INPUT DATABUS 11	28	G
25	1A20	XA8-	64	INPUT DATABUS 10	28	G
25	1A20	XA5-	80	INPUT DATABUS 10	28	G
26	1A20	XA8-	63	INPUT DATABUS 09	28	G
26	1A20	XA5-	76	INPUT DATABUS 09	28	G
27	1A20	XA3-	86	S REGISTER 02	28	G
28	1A20	XA3-	1	S REGISTER 03	28	G
29	1A20	XA4-	1	S REGISTER 07	28	G
30	1A20	XA4-	86	S-REGISTER 06	28	G
45	1A20	W1-	16	+5 BUSSBAR		
46	1A20	W1-	17	+5 BUSSBAR		
47	1A20	XA1-	44	H INT MEM	28	G
48				L=MR DISABLE N/C		

Card Rack Wire List
Table 4-13 (cont)

FROM PIN	TO COMPONENT- PIN		SIGNAL NAME	AWG	COLOR
	1A20 XA6				
49	1A20	XA1- 65	S REGISTER 08	28	G
50	1A20	XA1- 70	S REGISTER 09	28	G
51	1A20	XA4- 32	S REGISTER 05	28	G
52	1A20	XA1- 61	S REGISTER 11	28	G
53	1A20	XA2- 54	H 2.2	28	G
54	1A20	XA2- 36	H PHI 2	28	G
55	1A20	XA4- 77	S REGISTER 04	28	G
56	1A20	XA3- 32	S REGISTER 01	28	G
57	1A20	XA7- 6	CADL BLK0-LN5	28	G
57	1A20	XA5- 87	CADL BLK0-LN5	28	G
58	1A20	XA3- 77	S REGISTER 00	28	G
59	1A20	XA9- 56	L=AUTOVENT	28	G
60	1A20	J1- 2A	L SET ATE	28	G
60	1A20	J4- 26	L SET ATE	28	G
61	1A20	J4- 35	L=AUTOVENT TEST	28	G
62	1A20	XA7- 22	CADL BLK0-LN6	28	G
62	1A20	XA5- 79	CADL BLK0-LN6	28	G
63			SPARE INV IN N/C		
64	1A20	XA7- 15	CADL BLK1-LN3	28	G
65			SPARE INV OUT N/C		
66	1A20	XA7- 20	CADL BLK0-LN7	28	G
66	1A20	XA5- 85	CADL BLK0-LN7	28	G

Card Rack Wire List
Table 4-13 (cont)

FROM PIN	TO COMPONENT- PIN		SIGNAL NAME	AWG	COLOR
	1A20 XA6				
67			L SFAIL ATE N/C		
68	1A20	XA1- 34	H MEMORY F.F.	28	G
69	1A20	XA4- 83	X REGISTER 12	28	G
70	1A20	XA4- 88	X REGISTER 13	28	G
71	1A20	XA5- 61	L MASTER RESET	28	G
71	1A20	XA7- 84	L MASTER RESET	28	G
72	1A20	J1- 4G	L=SYS FAIL FP	28	G
73	1A20	XA7- 35	CADL BLK1-LN6	28	G
74	1A20	XA1- 69	S REGISTER 10	28	G
75	1A20	XA7- 8	CADL BLKO-LN14	28	G
75	1A20	XA5- 83	CADL BLKO-LN14	28	G
76	1A20	J1- 3D	L=M3 LIGHT	28	G
77	1A20	J1- 2C	L SET M3	28	G
77	1A20	J4- 29	L SET M3	28	G
78	1A20	XA2- 64	L=RD IND + IJ	28	G
79	1A20	XA7- 1	CADL BLKO-LN4	28	G
80			L=MR DISABLE N/C		
81	1A20	S1- 2	TP BUTTON BP RTN	28	BK
81	1A20	WT1- 25	CHASSIS GND		
82	1A20	WT1- 26	CHASSIS GND		
83	1A20	J3- 16	L DIO8	28	G
83	1A20	J4- 24	L DIO8	28	G
84	1A20	XA7- 80	L=S FAIL	28	G

FROM PIN	TO COMPONENT- PIN		SIGNAL NAME	AWG	COLOR
1A20 XA6					
85			SPU N/C		
86	1A20	XA1- 40	L MR + TEST	28	G
87	1A20	XA7- 33	CADL BLK1-LN8	28	G
88	1A20	J1- 4E	H=SRC	28	G
89	1A20	J1- 2B	L SET MSR	28	G
89	1A20	J4- 25	L SET MSR	28	G
90	1A20	XA2- 8	H=READ INDRCT INST	28	G
1A20 XA7					
1	1A20	XA6- 79	CADL BLKO-LN4	28	G
1	1A20	XA8- 50	CADL BLKO-LN4	28	G
1	1A20	J1- 5E	CADL BLKO-LN4	28	G
2	1A20	XA5- 40	X REGISTER 05	28	G
2	1A20	XA8- 41	X REGISTER 05	28	G
3	1A20	XA5- 89	CADL BLKO-LN3	28	G
3	1A20	J1- 5*B	CADL BLKO-LN3	28	G
4	1A20	XA5- 38	X REGISTER 04	28	G
4	1A20	XA8- 36	X REGISTER 04	28	G
5	1A20	XA8- 16	CADL BLKO-LN2	28	G
5	1A20	J1- 5Z	CADL BLKO-LN2	28	G
6	1A20	XA6- 57	CADL BLKO-LN5	28	G
6	1A20	XA8- 7	CADL BLKO-LN5	28	G
6	1A20	J1- 5D	CADL BLKO-LN5	28	G
7	1A20	XA8- 20	CADL BLKO-LN1	28	G
7	1A20	J1- 5C	CADL BLKO-LN1	28	G
8	1A20	XA6- 75	CADL BLKO-LN14	28	G

FROM PIN	TO COMPONENT- PIN		SIGNAL NAME	AWG	COLOR
	1A20	XA7			
9	1A20	J1- 6C	CADL BLKO-LN1 RTN	28	BK
9	1A20	J1- 6D	CADL BLKO-LN5 RTN	28	BK
9	1A20	J1- 6E	CADL BLKO-LN4 RTN	28	BK
9	1A20	WT1- 27	CHASSIS GND		
10	1A20	J1- 6B	CADL BLKO-LNO RTN	28	BK
10	1A20	J1- 6G	CADL BLK1-LN2 RTN	28	BK
10	1A20	J1- 6S	CADL BLK1-LN3 RTN	28	BK
10	1A20	WT1- 28	CHASSIS GND		
11	1A20	XA8- 18	CADL BLKO-LNO	28	G
11	1A20	J1- 5B	CADL BLKO-LNO	28	G
12	1A20	XA5- 90	CADL BLKO-LN15	28	G
12	1A20	XA8- 52	CADL BLKO-LN15	28	G
13			CADL BLK1-LN 4 N/C		
14	1A20	XA5- 48	X REGISTER 06	28	G
14	1A20	XA8- 31	X REGISTER 06	28	G
15	1A20	J1- 5S	CADL BLK1-LN3	28	G
15	1A20	XA6- 64	CADL BLK1-LN3	28	G
16	1A20	XA5- 66	X REGISTER 07	28	G
16	1A20	XA8- 30	X REGISTER 07	28	G
17	1A20	XA5- 63	CADL BLK1-LN2	28	G
18	1A20	XA5- 75	CADL BLKO-LN8	28	G
18	1A20	XA8- 8	CADL BLKO-LN8	28	G
19	1A20	XA8- 4	CADL BLK1-LN1	28	G
19	1A20	J1- 5F	CADL BLK1-LN1	28	G
20	1A20	XA6- 66	CADL BLKO-LN7	28	G
20	1A20	XA8- 22	CADL BLKO-LN7	28	G
21	1A20	XA5- 67	CADL BLK1-LNO	28	G
21	1A20	XA8- 17	CADL BLK1-LNO	28	G
21	1A20	J1- 5K	CADL BLK1-LNO	28	G

FROM PIN	TO COMPONENT- PIN		SIGNAL NAME	AWG	COLOR
	1A20	XA7			
22	1A20	XA6- 62	CADL BLK0-LN6	28	G
22	1A20	XA8- 19	CADL BLK0-LN6	28	G
23	1A20	XA5- 56	TS2-02	28	G
23	1A20	XA8- 87	TS2-02	28	G
24	1A20	XA5- 73	CADL BLK1-LN13	28	G
24	1A20	XA8- 12	CADL BLK1-LN13	28	G
25	1A20	XA5- 60	TS2-01	28	G
25	1A20	XA8- 86	TS2-01	28	G
26	1A20	XA5- 77	CADL BLK1-LN14	28	G
27	1A20	XA5- 52	TS2-03	28	G
27	1A20	XA8- 90	TS2-03	28	G
28			CADL BLK1-LN 5 N/C		
29	1A20	XA5- 64	TS2-00	28	G
29	1A20	XA8- 83	TS2-00	28	G
30	1A20	XA5- 71	CADL BLK1-LN15	28	G
31	1A20	XA12- 42	ANALOG INPUT	28	G
31	1A20	XA5- 3	ANALOG INPUT	28	G
32	1A20	XA5- 70	X REGISTER 11	28	G
32	1A20	XA8- 15	X REGISTER 11	28	G
33	1A20	XA9- 84	CADL BLK1-LN8	28	G
33	1A20	XA6- 87	CADL BLK1-LN8	28	G
34	1A20	XA5- 42	X REGISTER 10	28	G
34	1A20	XA8- 11	X REGISTER 10	28	G
35	1A20	XA6- 73	CADL BLK1-LN6	28	G
35	1A20	XA8- 54	CADL BLK1-LN6	28	G
35	1A20	J1- 5H	CADL BLK1-LN6	28	G

FROM PIN	TO COMPONENT- PIN	SIGNAL NAME	AWG	COLOR
	1A20 XA7			
36	1A20 XA5- 55	X REGISTER 09	28	G
36	1A20 XA8- 32	X REGISTER 09	28	G
37	1A20 XA8- 42	L DATA TRANSFER	28	G
37	1A20 XA5- 33	L DATA TRANSFER	28	G
38	1A20 XA5- 44	X REGISTER 08	28	G
38	1A20 XA8- 33	X REGISTER 08	28	G
40	1A20 XA5- 22	+15VDC	28	G
40	1A20 XA8- 40	+15VDC	28	G
41	1A20 J1- 4*A	X REG BIT 5 (FP)	28	G
42	1A20 XA5- 53	CADL BLK1-LN7	28	G
42	1A20 XA8- 6	CADL BLK1-LN7	28	G
43	1A20 J1- 3*B	X REG BIT 6 (FP)	28	G
44	1A20 XA5- 20	-15CR	28	G
44	1A20 XA9- 44	-15VDC	28	G
45	1A20 W1- 18	+5 BUSSBAR		
46	1A20 W1- 19	+5 BUSSBAR		
47	1A20 J1- 4X	X REG BIT 4 (FP)	28	G
48	1A20 XA5- 36	X REGISTER 03	28	G
48	1A20 XA8- 38	X REGISTER 03	28	G
49	1A20 J1- 6F	CADL BLK1-LN1 RTN	28	BK
49	1A20 J1- 6K	CADL BLK1-LNO RTN	28	BK
49	1A20 WT1- 29	CHASSIS GND		
50	1A20 XA12- 46	ANALOG RTN	28	BK
50	1A20 WT1- 30	CHASSIS GND		
51	1A20 XA5- 69	X REGISTER 02	28	G
51	1A20 XA8- 35	X REGISTER 02	28	G

FROM PIN	TO COMPONENT- PIN	SIGNAL NAME	AWG	COLOR
	1A20 XA7			
52	1A20 J1- 4V	X REG BIT 3 (FP)	28	G
53	1A20 XA5- 59	X REGISTER 01	28	G
53	1A20 XA8- 5	X REGISTER 01	28	G
54	1A20 J1- 4K	X REG BIT 0 (FP)	28	G
55	1A20 J1- 3Y	X REG BIT 7 (FP)	28	G
56	1A20 J1- 3U	X REG BIT 2 (FP)	28	G
57	1A20 XA5- 57	X REGISTER 00	28	G
57	1A20 XA8- 1	X REGISTER 00	28	G
58		DIE PT N/C		
59	1A20 J1- 4S	X REG BIT 1 (FP)	28	G
60		PT N/C		
61		PS N/C		
62		DIE PS N/C		
63	1A20 XA12- 5	L=ZIM PT	28	G
64	1A20 J1- 4L	L=SV5+7 CONTROL	28	G
65	1A20 J1- 4B	L=SV1 CONTROL	28	G
66	1A20 J1- 4J	L=SV3 CONTROL	28	G
67	1A20 XA13- 26	L=ZIC PS	28	G
68	1A20 XA13- 5	L=ZIM PS	28	G
69	1A20 J1- 5A	400 HZ	28	G
70	1A20 XA12- 26	L=ZIC PT	28	G

FROM PIN	TO COMPONENT- PIN		SIGNAL NAME	AWG	COLOR
	1A20 XA7				
71	1A20	XA5- 74	TS2-11	28	G
71	1A20	XA8- 61	TS2-11	28	G
72	1A20	XA9- 62	H SW	28	G
73	1A20	XA5- 88	TS2-08	28	G
73	1A20	XA8- 56	TS2-08	28	G
74	1A20	XA5- 78	TS2-10	28	G
74	1A20	XA8- 62	TS2-10	28	G
75	1A20	XA5- 13	L DAL 1	28	G
76	1A20	XA5- 84	TS2-09	28	G
76	1A20	XA8- 58	TS2-09	28	G
77	1A20	XA5- 37	TS2-05	28	G
77	1A20	XA8- 88	TS2-05	28	G
78			L=SFAIL N/C		
79	1A20	XA5- 49	TS2-04	28	G
79	1A20	XA8- 89	TS2-04	28	G
80	1A20	XA6- 84	L=S FAIL	28	G
81	1A20	J1- 6A	400 HZ RTN	28	BK
81	1A20	WT1- 31	CHASSIS GND		
82	1A20	J1- 6H	CADL BLK1-LN6 RTN	28	BK
82	1A20	WT1- 32	CHASSIS GND		
83	1A20	XA5- 32	TS2-06	28	G
83	1A20	XA8- 85	TS2-06	28	G
84	1A20	XA6- 71	L MASTER RESET	28	G
84	1A20	XA8- 3	L MASTER RESET	28	G
85	1A20	XA5- 28	TS2-07	28	G
85	1A20	XA8- 84	TS2-07	28	G

FROM PIN	TO COMPONENT- PIN	SIGNAL NAME	AWG	COLOR
	1A20 XA7			
86	1A20 XA5- 1	H=MR	28	G
86	1A20 XA10- 3	H MR	28	G
88	1A20 J1- 4C	H EQ FINE HEAT ON	28	G
	1A20 XA8			
1	1A20 XA9- 8	X REGISTER 00	28	G
1	1A20 XA7- 57	X REGISTER 00	28	G
2	1A20 XA11- 9	L=AUTO VENT LTS	28	G
3	1A20 XA7- 84	L MASTER RESET	28	G
3	1A20 XA11- 4	L MASTER RESET	28	G
4	1A20 XA7- 19	CADL BLK1-LN1	28	G
5	1A20 XA7- 53	X REGISTER 01	28	G
5	1A20 XA10- 27	X REGISTER 01	28	G
6	1A20 XA9- 83	CADL BLK1-LN7	28	G
6	1A20 XA7- 42	CADL BLK1-LN7	28	G
7	1A20 XA7- 6	CADL BLK0-LN5	28	G
8	1A20 XA9- 79	CADL BLK0-LN8	28	G
8	1A20 XA7- 18	CADL BLK0-LN8	28	G
9	1A20 J1- 2K	PT NOZZLE GND	28	G
9	1A20 WT1- 33	CHASSIS GND		
10	1A20 J1- 2L	PS NOZZLE GND	28	G
10	1A20 J1- 6Z	CADL BL0-LN2 RTN	28	BK
10	1A20 J1- 6*B	CADL BLK0-LN3 RTN	28	BK
10	1A20 WT1- 34	CHASSIS GND		
11	1A20 XA7- 34	X REGISTER 10	28	G
11	1A20 XA10- 4	X REGISTER 10	28	G

FROM PIN	TO COMPONENT- PIN		SIGNAL NAME	AWG	COLOR
	1A20	XA8			
12	1A20	XA7- 24	CADL BLK1-LN13	28	G
13	1A20	J1- 4*C	PT DYNAMIC LT	28	G
14	1A20	J1- 4W	PS DYNAMIC LT	28	G
15	1A20	XA7- 32	X REGISTER 11	28	G
15	1A20	XA10- 5	X REGISTER 11	28	G
16	1A20	XA7- 5	CADL BLK0-LN2	28	G
17	1A20	XA7- 21	CADL BLK1-LN0	28	G
17	1A20	XA11- 6	CADL BLK1-LN0	28	G
18	1A20	XA7- 11	CADL BLK0-LN0	28	G
19	1A20	XA9- 80	CADL BLK0-LN6	28	G
19	1A20	XA7- 22	CADL BLK0-LN6	28	G
20	1A20	XA7- 7	CADL BLK0-LN1	28	G
21	1A20	J1- 2E	DI N.C.	28	G
22	1A20	XA9- 86	CADL BLK0-LN7	28	G
22	1A20	XA7- 20	CADL BLK0-LN7	28	G
23			C2 TEST CONTROL		
24	1A20	J1- 2D	DI N.O.	28	G
25	1A20	XA13- 47	L=PS AUTO SLEW	28	G
26	1A20	XA9- 69	LOX	28	G
27	1A20	XA12- 47	L=PT AUTO SLEW	28	G
28			CLK TEST CONTROL		
29			SPARE MUX		

FROM PIN	TO COMPONENT- PIN			SIGNAL NAME	AWG	COLOR
	1A20	XA8				
30	1A20	XA7-	16	X REGISTER 07	28	G
30	1A20	XA9-	11	X REGISTER 07	28	G
31	1A20	XA7-	14	X REGISTER 06	28	G
31	1A20	XA9-	13	X REGISTER 06	28	G
32	1A20	XA10-	30	X REGISTER 09	28	G
32	1A20	XA7-	36	X REGISTER 09	28	G
33	1A20	XA10-	34	X REGISTER 08	28	G
33	1A20	XA7-	38	X REGISTER 08	28	G
34	1A20	XA6-	16	L=PADLOCK (C1)	28	G
35	1A20	XA7-	51	X REGISTER 02	28	G
35	1A20	XA10-	33	X REGISTER 02	28	G
36	1A20	XA7-	4	X REGISTER 04	28	G
36	1A20	XA9-	17	X REGISTER 04	28	G
37	1A20	XA12-	28	L=PT DYN INPUT NBL	28	G
38	1A20	XA10-	42	X REGISTER 03	28	G
38	1A20	XA7-	48	X REGISTER 03	28	G
39	1A20	XA13-	28	L=PS DYN INPUT NBL	28	G
40	1A20	XA7-	40	+15VDC	28	G
40	1A20	XA9-	40	+15CR	28	G
41	1A20	XA9-	15	X REGISTER 05	28	G
41	1A20	XA7-	2	X REGISTER 05	28	G
42	1A20	XA10-	52	L=DTP	28	G
42	1A20	XA7-	37	L DATA TRANSFER	28	G
43				SP PULL UP		
44	1A20	XA9-	19	H=IDE	28	G
44	1A20	XA5-	5	H=IDE	28	G

FROM PIN	TO COMPONENT- PIN		SIGNAL NAME	AWG	COLOR
	1A20	XA8			
45	1A20	W1- 20	+5 BUSSBAR		
46	1A20	W1- 21	+5 BUSSBAR		
47	1A20	J1- 3K	PT EXHAUST NOZZLE	28	G
48	1A20	XA9- 14	H=NID	28	G
48	1A20	XA5- 68	H=NID	28	G
49	1A20	J1- 3L	PS EXHAUST NOZZLE	28	G
50	1A20	XA7- 1	CADL BLKO-LN4	28	G
51	1A20	J1- 1K	PT INLET NOZZLE	28	G
52	1A20	XA7- 12	CADL BLKO-LN15	28	G
53	1A20	J1- 1L	PS INLET NOZZLE	28	G
54	1A20	XA7- 35	CADL BLK1-LN6	28	G
54	1A20	XA9- 85	CADL BLK1-LN6	28	G
55	1A20	XA5- 4	TS2-15	28	G
56	1A20	XA7- 73	TS2-08	28	G
57	1A20	XA5- 8	TS2-14	28	G
58	1A20	XA7- 76	TS2-09	28	G
59	1A20	XA5- 24	TS2-12	28	G
60	1A20	XA5- 16	TS2-13	28	G
61	1A20	XA7- 71	TS2-11	28	G
62	1A20	XA7- 74	TS2-10	28	G
63	1A20	XA6- 26	INPUT DATABUS 09	28	G
63	1A20	XA9- 3	INPUT DATABUS 09	28	G

FROM PIN	TO COMPONENT- PIN	SIGNAL NAME	AWG	COLOR
	1A20 XA8			
64	1A20 XA6- 25	INPUT DATABUS 10	28	G
64	1A20 XA9- 7	INPUT DATABUS 10	28	G
65	1A20 XA9- 63	INPUT DATABUS 14	28	G
65	1A20 XA6- 19	INPUT DATABUS 14	28	G
66	1A20 XA6- 24	INPUT DATABUS 11	28	G
66	1A20 XA9- 5	INPUT DATABUS 11	28	G
67	1A20 XA6- 23	INPUT DATABUS 08	28	G
67	1A20 XA9- 1	INPUT DATABUS 08	28	G
68	1A20 XA9- 67	INPUT DATABUS 12	28	G
68	1A20 XA6- 21	INPUT DATABUS 12	28	G
69	1A20 XA9- 61	INPUT DATABUS 15	28	G
69	1A20 XA6- 20	INPUT DATABUS 15	28	G
71	1A20 XA9- 55	INPUT DATABUS 02	28	G
71	1A20 XA6- 14	INPUT DATABUS 02	28	G
72	1A20 XA9- 65	INPUT DATABUS 13	28	G
72	1A20 XA6- 22	INPUT DATABUS 13	28	G
73	1A20 XA9- 47	INPUT DATABUS 03	28	G
73	1A20 XA6- 7	INPUT DATABUS 03	28	G
74	1A20 XA9- 57	INPUT DATABUS 01	28	G
74	1A20 XA6- 11	INPUT DATABUS 01	28	G
74	1A20 J1- 4U	INPUT DATABUS 01	28	G
75	1A20 XA6- 8	INPUT DATABUS 04	28	G
75	1A20 XA9- 53	INPUT DATABUS 04	28	G
76	1A20 XA6- 6	INPUT DATABUS 06	28	G
76	1A20 XA9- 22	INPUT DATABUS 06	28	G
77	1A20 XA6- 3	INPUT DATABUS 07	28	G
77	1A20 XA9- 24	INPUT DATABUS 07	28	G

Card Rack Wire List
Table 4-13 (cont)

FROM PIN	TO COMPONENT- PIN		SIGNAL NAME	AWG	COLOR
	1A20 XA8				
78	1A20	XA9- 59	INPUT DATABUS 00	28	G
78	1A20	XA6- 12	INPUT DATABUS 0C	28	G
78	1A20	J1- 4A	INPUT DATABUS 00	28	G
79	1A20	J1- 3A	-28.5VDC	28	G
80	1A20	XA6- 5	INPUT DATABUS 05	28	G
80	1A20	XA9- 51	INPUT DATABUS 05	28	G
81	1A20	WT1- 37	CHASSIS GND		
82	1A20	WT1- 38	CHASSIS GND		
83	1A20	XA9- 16	TS2-00	28	G
83	1A20	XA7- 29	TS2-00	28	G
84	1A20	XA7- 85	TS2-07	28	G
85	1A20	XA7- 83	TS2-06	28	G
86	1A20	XA9- 18	TS2-01	28	G
86	1A20	XA7- 25	TS2-01	28	G
87	1A20	XA9- 20	TS2-02	28	G
87	1A20	XA7- 23	TS2-02	28	G
88	1A20	XA7- 77	TS2-05	28	G
89	1A20	XA7- 79	TS2-04	28	G
90	1A20	XA9- 12	TS2-03	28	G
90	1A20	XA7- 27	TS2-03	28	G

FROM PIN	TO COMPONENT- PIN	SIGNAL NAME	AWG	COLOR
	1A20 XA9			
1	1A20 XA8- 67	INPUT DATABUS 08	28	G
2	1A20 XA1- 9	CLK PHAZ 2	28	G
3	1A20 XA8- 63	INPUT DATABUS 09	28	G
4		MHSC		
5	1A20 XA8- 66	INPUT DATABUS 11	28	G
6	1A20 XA1- 10	CLK PHAZ 1	28	G
7	1A20 XA8- 64	INPUT DATABUS 10	28	G
8	1A20 XA10- 40	X REGISTER 00	28	G
8	1A20 XA8- 1	X REGISTER 00	28	G
9	1A20 J1- 6L	TS2-1 RTN	28	BK
9	1A20 J1- 6T	INPUT ID STROBERTN	28	BK
9	1A20 J1- 6U	TS2-2 RTN	28	BK
9	1A20 WT1- 39	CHASSIS GND		
10	1A20 J1- 3X	COM-CSP	28	G
10	1A20 J1- 6V	INPUT DATA NBL RTN	28	BK
10	1A20 J1- 6Y	TS2-3 RTN	28	BK
10	1A20 WT1- 40	CHASSIS GND		
11	1A20 XA10- 24	X REGISTER 07	28	G
11	1A20 XA8- 30	X REGISTER 07	28	G
12	1A20 XA10- 28	TS2-03	28	G
12	1A20 XA8- 90	TS2-03	28	G
13	1A20 XA10- 26	X REGISTER 06	28	G
13	1A20 XA8- 31	X REGISTER 06	28	G
14	1A20 XA10- 50	H STRB ID REGISTER	28	G
14	1A20 XA8- 48	H=NID	28	G

FROM PIN	TO COMPONENT- PIN	SIGNAL NAME	AWG	COLOR
	1A20 XA9			
15	1A20 XA10- 48	X REGISTER 05	28	G
15	1A20 XA8- 41	X REGISTER 05	28	G
16	1A20 XA10- 16	TS2-00	28	G
16	1A20 XA8- 83	TS2-00	28	G
17	1A20 XA10- 44	X REGISTER 04	28	G
17	1A20 XA8- 36	X REGISTER 04	28	G
18	1A20 XA10- 14	TS2-01	28	G
18	1A20 XA8- 86	TS2-01	28	G
19	1A20 XA10- 54	H=IDE	28	G
19	1A20 XA8- 44	H=IDE	28	G
20	1A20 XA10- 18	TS2-02	28	G
20	1A20 XA8- 87	TS2-02	28	G
21	1A20 J1- 5U	TS2-2 (FP)	28	G
22	1A20 XA8- 76	INPUT DATABUS 06	28	G
23	1A20 J1- 5Y	TS2-3 (FP)	28	G
24	1A20 XA8- 77	INPUT DATABUS 07	28	G
25	1A20 J1- 5T	INPT ID STROBE(FP)	28	G
26	1A20 J1- 5J	TS2-0 (FP)	28	G
27	1A20 J1- 5V	INPT DATA NBL (FP)	28	G
28	1A20 J1- 5L	TS2-1 (FP)	28	G
29	1A20 XA9- 49	GND	28	G
30		SPARE INV5 IN		
31	1A20 XA1- 33	BIT INITIATE	28	G

FROM PIN	TO COMPONENT- PIN			SIGNAL NAME	AWG	COLOR
	1A20	XA9				
32				SPARE INV5 OUT		
33				SPARE INV3 IN		
34				SPARE INV6 IN		
35				SPARE INV3 OUT		
36				SPARE INV6 OUT		
37				SPARE INV2 OUT		
38				SPARE INV4 IN		
39				SPARE INV2 IN		
40	1A20	XA8-	40	+15CR	28	G
40	1A20	XA11-	32	+15CR	28	G
41				SPARE INV1 OUT		
42				SPARE INV4 OUT		
43				SPARE INV1 IN		
44	1A20	XA7-	44	-15VDC	28	G
44	1A20	XA11-	36	-15VDC	28	G
45	1A20	W1-	22	+5 BUSSBAR		
46	1A20	W1-	23	+5 BUSSBAR		
47	1A20	XA10-	60	INPUT DATABUS 03	28	G
47	1A20	XA8-	73	INPUT DATABUS 03	28	G
48	1A20	XA5-	47	TPB FLAG	28	G
49	1A20	XA9-	29	GND	28	G
49	1A20	WT1-	41	CHASSIS GND		

FROM PIN	TO COMPONENT- PIN	SIGNAL NAME	AWG	COLOR
	1A20 XA9			
50	1A20 WT1- 42	CHASSIS GND		
51	1A20 XA8- 80	INPUT DATABUS 05	28	G
53	1A20 XA8- 75	INPUT DATABUS 04	28	G
55	1A20 XA10- 64	INPUT DATABUS 02	28	G
55	1A20 XA8- 71	INPUT DATABUS 02	28	G
56	1A20 XA11- 8	L=AUTO VENT	28	G
56	1A20 XA6- 59	L=AUTOVENT	28	G
57	1A20 XA10- 68	INPUT DATABUS 01	28	G
57	1A20 XA8- 74	INPUT DATABUS 01	28	G
59	1A20 XA10- 72	INPUT DATABUS 00	28	G
59	1A20 XA8- 78	INPUT DATABUS 00	28	G
60	1A20 J1- 4H	PS SENSOR 2 HOT	28	G
60	1A20 J1- 4Z	PT SENSOR 2 HOT	28	G
61	1A20 XA8- 69	INPUT DATABUS 15	28	G
61	1A20 XA10- 71	INPUT DATABUS 15	28	G
62	1A20 XA7- 72	H SW	28	G
63	1A20 XA8- 65	INPUT DATABUS 14	28	G
64	1A20 J1- 3*A	CSP	28	G
65	1A20 XA8- 72	INPUT DATABUS 13	28	G
67	1A20 XA8- 68	INPUT DATABUS 12	28	G
69	1A20 XA8- 26	LOX	28	G
69	1A20 XA11- 69	LOX	28	G
69	1A20 J1- 4D	LOX	28	G
70	1A20 XA1- 48	REAL TIME CLOCK	28	G

FROM PIN	TO COMPONENT- PIN	SIGNAL NAME	AWG	COLOR
	1A20 XA9			
71	1A20 XA5- 31	L DAL	28	G
72	1A20 XA13- 64	CFF PS S3C	28	G
74	1A20 XA12- 44	DI+FFF PT S1C	28	G
75	1A20 XA13- 44	DI+FFF PS S1C	28	G
76	1A20 XA13- 72	ERROR SIG PS S2C	28	G
77	1A20 XA12- 64	CFF PT S3C	28	G
78	1A20 XA12- 72	ERROR SIG PT S2C	28	G
79	1A20 XA8- 8	CADL BLKO-LN8	28	G
80	1A20 XA8- 19	CADL BLKO-LN6	28	G
80	1A20 XA11- 5	CADL BLKO-LN6	28	G
81	1A20 J1- 2*C	PT SQ OUT SHIELD	28	G
81	1A20 WT1- 43	CHASSIS GND		
82	1A20 J1- 2*B	PS SQ OUT SHIELD	28	G
82	1A20 J1- 6J	TS2-0 RTN	28	BK
82	1A20 WT1- 44	CHASSIS GND		
83	1A20 XA8- 6	CADL BLK1-LN7	28	G
84	1A20 XA7- 33	CADL BLK1-LN8	28	G
85	1A20 XA8- 54	CADL BLK1-LN6	28	G
86	1A20 XA8- 22	CADL BLKO-LN7	28	G
86	1A20 XA11- 7	CADL BLKO-LN7	28	G
87	1A20 J1- 1*B	PS SQUARE OUTPUT	28	G
88	1A20 J1- 1*C	PT SQUARE OUTPUT	28	G
89	1A20 J4- 33	PS SENSOR SIG	28	G

FROM PIN	TO COMPONENT-	PIN	SIGNAL NAME	AWG	COLOR
1A20 XA9					
90	1A20	J4- 34	PT SENSOR SIG	28	G
1A20 XA10					
1	1A20	J4- 14	GND(NDAC)	28	BK
1	1A20	J4- 19	GND(IFC)	28	BK
1	1A20	WT1- 45	CHASSIS GND		
2	1A20	WT1- 46	CHASSIS GND		
3	1A20	XA7- 86	H MR	28	G
4	1A20	XA8- 11	X REGISTER 10	28	G
5	1A20	XA8- 15	X REGISTER 11	28	G
6	1A20	J4- 11	L DI05	28	G
6	1A20	J3- 13	L DI05	28	G
8	1A20	J4- 12	L DI06	28	G
8	1A20	J3- 14	L DI06	28	G
10	1A20	J4- 10	L DI01	28	G
10	1A20	J3- 1	L DI01	28	G
12	1A20	J4- 13	L DI04	28	G
12	1A20	J3- 4	L DI04	28	G
14	1A20	XA9- 18	TS2-01	28	G
16	1A20	XA9- 16	TS2-00	28	G
18	1A20	XA9- 20	TS2-02	28	G
20	1A20	J4- 4	L DI02	28	G
20	1A20	J3- 2	L DI02	28	G
22	1A20	J4- 3	L DI03	28	G
22	1A20	J3- 3	L DI03	28	G

FROM PIN	TO COMPONENT- PIN			SIGNAL NAME	AWG	COLOR
	1A20	XA10				
24	1A20	XA9-	11	X REGISTER 07	28	G
26	1A20	XA9-	13	X REGISTER 06	28	G
27	1A20	XA8-	5	X REGISTER 01	28	G
28	1A20	XA9-	12	TS2-03	28	G
30	1A20	XA8-	32	X REGISTER 09	28	G
33	1A20	XA8-	35	X REGISTER 02	28	G
34	1A20	XA8-	33	X REGISTER 08	28	G
35	1A20	J4-	1	L DAV	28	G
35	1A20	J3-	6	L DAV	28	G
37	1A20	W1-	24	+5 BUSSBAR		
38	1A20	W1-	25	+5 BUSSBAR		
39	1A20	J4-	6	L DIO7	28	G
39	1A20	J3-	15	L DIO7	28	G
40	1A20	XA9-	8	X REGISTER 00	28	G
41	1A20	J4-	7	L SRQ	28	G
41	1A20	J3-	10	L SRQ	28	G
42	1A20	XA8-	38	X REGISTER 03	28	G
43	1A20	J4-	18	L IFC	28	G
43	1A20	J3-	9	L IFC	28	G
44	1A20	XA9-	17	X REGISTER 04	28	G
45	1A20	WT1-	47	CHASSIS GND		
46	1A20	J4-	2	GND(DAV)	28	BK
46	1A20	J4-	20	GND(SRQ)	28	BK
46	1A20	WT1-	48	CHASSIS GND		

FROM PIN	TO COMPONENT- PIN		SIGNAL NAME	AWG	COLOR
	1A20	XA10			
47	1A20	J4- 8	L ATTN	28	G
47	1A20	J3- 11	L ATTN	28	G
48	1A20	XA9- 15	X REGISTER 05	28	G
49	1A20	J4- 9	L EOI	28	G
49	1A20	J3- 5	L EOI	28	G
50	1A20	XA9- 14	H STRB ID REGISTER	28	G
51	1A20	J4- 15	L REN	28	G
51	1A20	J3- 17	L REN	28	G
52	1A20	XA8- 42	L=DTP	28	G
53	1A20	J4- 16	L NDAC	28	G
53	1A20	J3- 8	L NDAC	28	G
54	1A20	XA9- 19	H=IDE	28	G
55	1A20	J4- 17	L NRFD	28	G
55	1A20	J3- 7	L NRFD	28	G
60	1A20	XA9- 47	INPUT DATABUS 03	28	G
64	1A20	XA9- 55	INPUT DATABUS 02	28	G
64	1A20	J1- 3T	INPUT DATABUS 02	28	G
68	1A20	XA9- 57	INPUT DATABUS 01	28	G
71	1A20	XA9- 61	INPUT DATABUS 15	28	G
72	1A20	XA9- 59	INPUT DATABUS 00	28	G
73	1A20	J4- 21	GND (ATTN)	28	BK
73	1A20	J4- 22	COMMON-6	28	G
73	1A20	WT1- 49	CHASSIS GND		
74	1A20	J4- 5	GND(NRFD)	28	BK
74	1A20	J4- 23	COMMON-7	28	G
74	1A20	WT1- 50	CHASSIS GND		

Card Rack Wire List
Table 4-13 (cont)

FROM PIN	TO COMPONENT- PIN		SIGNAL NAME	AWG	COLOR
	1A20	XA11			
1	1A20	J1- 2Y	BAT GND	28	G
1	1A20	WT1- 51	CHASSIS GND		
2	1A20	J3- 18	GND (DAV)	28	BK
2	1A20	WT1- 52	CHASSIS GND		
4	1A20	XA8- 3	L MASTER RESET	28	G
5	1A20	XA9- 80	CADL BLK0-LN6	28	G
6	1A20	XA8- 17	CADL BLK1-LN0	28	G
7	1A20	XA9- 86	CADL BLK0-LN7	28	G
8	1A20	XA9- 56	L=AUTO VENT	28	G
9	1A20	XA8- 2	L=AUTO VENT LTS	28	G
10	1A20	J1- 1W	AUTO VENT LT HI	28	G
11	1A20	J1- 1*A	AUTO VENT LT LOW	28	G
12	1A20	J1- 2W	BAT LOW LT HI	28	G
13	1A20	J1- 2*A	BAT LOW LT LOW	28	G
17	1A20	J1- 1S	AS SENSOR PT V	28	G
18	1A20	J1- 1T	AS SENSOR PT V GND	28	G
19	1A20	J1- 1U	AS SENSOR PT OUT	28	G
20	1A20	J1- 1V	AS SENSOR PT OUTRN	28	G
22	1A20	XA12- 22	+15VDC BAT	28	G
22	1A20	J1- 2X	+15VDC BAT	28	G
24	1A20	J1- 2S	AS SENSOR PS V	28	G

FROM PIN	TO COMPONENT- PIN		SIGNAL NAME	AWG	COLOR
	1A20 XA11				
25	1A20	J1- 2T	AS SENSOR PS V GND	28	G
26	1A20	J1- 2U	AS SENSOR PS OUT	28	G
27	1A20	J1- 2V	AS SENSOR PS OUTRN	28	G
32	1A20	XA9- 40	+15CR	28	G
36	1A20	XA9- 44	-15VDC	28	G
37	1A20	W1- 26	+5 BUSSBAR		
38	1A20	W1- 27	+5 BUSSBAR		
44	1A20	J1- 1F	+15V BAT DISCHARGE	28	G
45	1A20	J3- 23	GND (ATTN)	28	BK
45	1A20	WT1- 53	CHASSIS GND		
46	1A20	J3- 21	GND (IFC)	28	BK
46	1A20	J3- 22	GND (SRQ)	28	BK
46	1A20	WT1- 54	CHASSIS GND		
47	1A20	J1- 1G	-15V BAT DISCHARGE	28	G
49	1A20	XA12- 49	-15VDC BAT	28	G
49	1A20	J1- 2Z	-15VDC BAT	28	G
50	1A20	J1- 1X	+BAT CHARGE	28	G
51	1A20	J1- 1Y	BAT CHARGE GND	28	G
52	1A20	J1- 1Z	-BAT CHARGE	28	G
53	1A20	XA12- 53	-LV	28	G
55	1A20	XA12- 55	+VENT RLY	28	G
57	1A20	XA12- 57	-VENT RLY	28	G

FROM PIN	TO COMPONENT- PIN	SIGNAL NAME	AWG	COLOR
1A20 XA11				
59	1A20 XA12- 59	+LV	28	G
62	1A20 XA12- 63	PT VENT DRIVE	28	G
63	1A20 XA13- 63	PS VENT DRIVE	28	G
69	1A20 XA9- 69	LOX	28	G
73	1A20 J3- 12	SHIELD	28	G
73	1A20 J3- 24	GND (LOGIC)	28	G
73	1A20 WT1- 55	CHASSIS GND		
74	1A20 J3- 19	GND (NRFD)	28	BK
74	1A20 J3- 20	GND (NDAC)	28	BK
74	1A20 WT1- 56	CHASSIS GND		
1A20 XA12				
1	1A20 XA12- 9	GND DIFF RTN	28	G
1	1A20 WT1- 57	CHASSIS GND		
2	1A20 WT1- 58	CHASSIS GND		
4		TP-15 N/C		
5	1A20 XA7- 63	L=ZIM PT	28	G
6		TP-11 N/C		
7	1A20 J1- 6W	PT SINE SHIELD	28	BK
8	1A20 J1- 5W	PT SINE OUTPUT	28	G
9	1A20 XA12- 1	GND DIFF RTN	28	G
10		+10VDC REF N/C		
12		TP-14 N/C		

Card Rack Wire List
Table 4-13 (cont)

FROM PIN	TO COMPONENT- PIN		SIGNAL NAME	AWG	COLOR
	1A20 XA12				
14	1A20	J1- 5*A	PT CV (RED)	26	R
16			TP-13 N/C		
17	1A20	J4- 36	F TO V OUT PT	28	G
18			-10VDC REF N/C		
19			SPARE RLY		
20			SPARE RLY		
21			SPARE RLY		
22	1A20	XA13- 22	+15VDC BAT	28	G
22	1A20	XA11- 22	+15VDC BAT	28	G
24	1A20	XA13- 24	+15VDC FOR CV	28	G
24	1A20	J1- 3B	+15VDC FOR CV	28	G
26	1A20	XA7- 70	L=ZIC PT	28	G
27	1A20	XA13- 27	L=INT DYN ENA	28	G
27	1A20	XA5- 65	L=INT DYN ENA	28	G
28	1A20	XA8- 37	L=PT DYN INPUT NBL	28	G
29	1A20	XA13- 29	L=EXT DYN ENA	28	G
29	1A20	XA5- 43	L=EXT DYN ENA	28	G
30			TP-12 N/C		
32	1A20	J1- 4Y	+15 CR PT	28	G
36	1A20	J1- 4*B	-15 CR PT	28	G
37	1A20	W1- 28	+5 BUSSBAR		
38	1A20	W1- 29	+5 BUSSBAR		

FROM PIN	TO COMPONENT- PIN			SIGNAL NAME	AWG	COLOR
	1A20 XA12					
42	1A20	XA7-	31	ANALOG INPUT	28	G
42	1A20	XA12-	60	ANALOG INPUT	28	G
42	1A20	XA13-	42	ANALOG INPUT	28	G
44	1A20	XA9-	74	DI+FFF PT S1C	28	G
45				ANALOG SHD	28	CLEAR
45				ANALOG SHD	28	CLEAR
45	1A20	WT1-	59	CHASSIS GND		
46	1A20	XA7-	50	ANALOG RTN	28	BK
46	1A20	XA13-	46	ANALOG RTN	28	BK
46	1A20	XA12-	74	ANALOG RTN	28	BK
46	1A20	WT1-	60	CHASSIS GND		
47	1A20	XA12-	51	L=PT AUTO SLEW	28	G
47	1A20	XA8-	27	L=PT AUTO SLEW	28	G
48	1A20	J1-	6*A	PT CV (BLK)	26	BK
49	1A20	XA13-	49	-15VDC BAT	28	G
49	1A20	XA11-	49	-15VDC BAT	28	G
51	1A20	XA12-	47	L=PT AUTO SLEW	28	G
52	1A20	XA13-	52	-15VDC FOR CV	28	G
52	1A20	J1-	3C	-15VDC FOR CV	28	G
53	1A20	XA13-	53	-LV	28	G
53	1A20	XA11-	53	-LV	28	G
55	1A20	XA13-	55	+VENT RLY	28	G
55	1A20	XA11-	55	+VENT RLY	28	G
57	1A20	XA13-	57	-VENT RLY	28	G
57	1A20	XA11-	57	-VENT RLY	28	G
59	1A20	XA13-	59	+LV	28	G
59	1A20	XA11-	59	+LV	28	G

FROM PIN	TO COMPONENT- PIN	SIGNAL NAME	AWG	COLOR
	1A20 XA12			
60	1A20 XA12- 70	ANALOG INPUT	28	G
60	1A20 XA12- 42	ANALOG INPUT	28	G
62		TP-16 N/C		
63	1A20 XA11- 62	PT VENT DRIVE	28	G
64	1A20 XA9- 77	CFF PT S3C	28	G
65	1A20 XA12- 73	GND TEST INPUT	28	G
66	1A20 J2- A	EDIGA	28	G
66	1A20 XA13- 66	EDIGA	28	G
67	1A20 XA13- 67	IDIGA (D/A)	28	G
67	1A20 XA5- 21	IDIGA(D/A)	28	G
69	1A20 XA5- 7	PT I LG ENABLE	28	G
70	1A20 XA12- 60	ANALOG INPUT	28	G
70	1A20 XA12- 71	ANALOG IN (D/A)	28	G
71	1A20 XA12- 70	ANALOG IN (D/A)	28	G
72	1A20 XA9- 78	ERROR SIG PT S2C	28	G
73	1A20 J2- B	EDIGA RTN	28	BK
73	1A20 XA12- 65	GND TEST INPUT	28	G
73	1A20 XA13- 73	EDIGA RTN	28	BK
73	1A20 WT1- 61	CHASSIS GND		
74	1A20 XA12- 46	ANALOG RTN	28	BK
74	1A20 WT1- 62	CHASSIS GND		

FROM PIN	TO COMPONENT- PIN	SIGNAL NAME	AWG	COLOR
	1A20 XA13			
1	1A20 XA13- 9	GND DIFF RTN	28	G
1	1A20 WT1- 63	CHASSIS GND		
2	1A20 WT1- 64	CHASSIS GND		
4		TP-15 N/C		
5	1A20 XA7- 68	L=ZIM PS	28	G
6		TP-11 N/C		
7	1A20 J1- 6*C	PS SINE SHIELD	28	BK
8	1A20 J1- 5*C	PS SINE OUT	28	G
9	1A20 XA13- 1	GND DIFF RTN	28	G
10		+10 VDC REF N/C		
12		TP-14 N/C		
14	1A20 J1- 5X	PS CV (RED)	26	R
16		TP-13 N/C		
17	1A20 J4- 37	F TO V OUT PS	28	G
18		-10VDC REF N/C		
19		SPARE RLY		
20		SPARE RLY		
21		SPARE RLY		
22	1A20 XA12- 22	+15VDC BAT	28	G
24	1A20 XA12- 24	+15VDC FOR CV	28	G

Card Rack Wire List
Table 4-13 (cont)

FROM PIN	TO COMPONENT- PIN		SIGNAL NAME	AWG	COLOR
	1A20	XA13			
26	1A20	XA7- 67	L=ZIC PS	28	G
27	1A20	XA12- 27	L=INT DYN ENA	28	G
28	1A20	XA8- 39	L=PS DYN INPUT NBL	28	G
29	1A20	XA12- 29	L=EXT DYN ENA	28	G
30			TP-12 N/C		
32	1A20	J1- 3Z	+15CR PS	28	G
36	1A20	J1- 3*C	-15CR PS	28	G
37	1A20	W1- 30	+5 BUSSBAR		
38	1A20	W1- 31	+5 BUSSBAR		
42	1A20	XA13- 60	ANALOG INPUT	28	G
42	1A20	XA12- 42	ANALOG INPUT	28	G
44	1A20	XA9- 75	DI+FFF PS SIC	28	G
45	1A20	WT1- 65	CHASSIS GND		
46	1A20	XA13- 74	ANALOG RTN	28	BK
46	1A20	XA12- 46	ANALOG RTN	28	BK
46	1A20	WT1- 66	CHASSIS GND		
47	1A20	XA13- 51	L=PS AUTO SLEW	28	G
47	1A20	XA8- 25	L=PS AUTO SLEW	28	G
48	1A20	J1- 6X	PS C.V.(BLK)	26	BK
49	1A20	XA12- 49	-15VDC BAT	28	G
51	1A20	XA13- 47	L=PS AUTO SLEW	28	G
52	1A20	XA12- 52	-15VDC FOR CV	28	G

FROM PIN	TO COMPONENT- PIN			SIGNAL NAME	AWG	COLOR
	1A20	XA13				
53	1A20	XA12-	53	-LV	28	G
55	1A20	XA12-	55	+VENT RLY	28	G
57	1A20	XA12-	57	-VENT RLY	28	G
59	1A20	XA12-	59	+LV	28	G
60	1A20	XA13-	70	ANALOG INPUT	28	G
60	1A20	XA13-	42	ANALOG INPUT	28	G
62				TP-16 N/C		
63	1A20	XA11-	63	PS VENT DRIVE	28	G
64	1A20	XA9-	72	CFF PS S3C	28	G
65	1A20	XA13-	73	GND TEST INPUT	28	G
66	1A20	XA12-	66	EDIGA	28	G
67	1A20	XA12-	67	IDIGA (D/A)	28	G
69	1A20	XA5-	11	PS I LG ENABLE	28	G
70	1A20	XA13-	60	ANALOG INPUT	28	G
70	1A20	XA13-	71	ANALOG IN (D/A)	28	G
71	1A20	XA13-	70	ANALOG IN (D/A)	28	G
72	1A20	XA9-	76	ERROR SIG PS S2C	28	G
73	1A20	XA12-	73	EDIGA RTN	28	BK
73	1A20	XA13-	65	GND TEST INPUT	28	G
73	1A20	WT1-	67	CHASSIS GND		
74				GND		
74	1A20	XA13-	46	ANALOG RTN	28	BK
74	1A20	WT1-	68	CHASSIS GND		

Card Rack Wire List
Table 4-13 (cont)

FROM PIN	TO COMPONENT-	PIN	SIGNAL NAME	AWG	COLOR
1A20J1 W2					
1	1A20	W1- 1	+5	22	W
2	1A20	W1- 2	+5	22	W
3	1A20	W1- 3	+5	22	W
4	1A20	W1- 4	+5	22	W
5	1A20	J1- 1N	+5VDC BUSSBAR		
6	1A20	J1- 2N	+5VDC BUSSBAR		
7	1A20	J1- 3N	+5VDC BUSSBAR		
8	1A20	J1- 4N	+5VDC BUSSBAR		
9	1A20	J1- 5N	+5VDC BUSSBAR		
10	1A20	J1- 6N	+5VDC BUSSBAR		
1A20J1 W3					
1	1A20	E1- 1	GND	22	GY
2	1A20	E2- 1	GND	22	GY
3	1A20	E3- 1	GND	22	GY
4	1A20	E4- 1	GND	22	GY
5	1A20	J1- 1P	+5VDC GND BUSSBAR		
6	1A20	J1- 2P	+5VDC GND BUSSBAR		
7	1A20	J1- 3P	+5VDC GND BUSSBAR		
8	1A20	J1- 4P	+5VDC GND BUSSBAR		

Card Rack Wire List
Table 4-13 (cont)

FROM PIN	TO COMPONENT- PIN		SIGNAL NAME	AWG --	COLOR
	1A20J1 W3				
9	1A20	J1- 5P	+5VDC GND BUSSBAR		
10	1A20	J1- 6P	+5VDC GND BUSSBAR		

WL4047695-901
REV A

NOTES:
1. To provide a complete alphanumeric listing of all termination points, each wire appears twice. Both appearances are identical with the exception that the second appearance has the "FROM" and "TO" ends swapped.
2. An asterisk before the "PIN" designation indicates lower case letter(s).
3. An asterisk within "SIGNAL NAME" denotes logical "NOT."

FROM PIN	TO COMPONENT- PIN	SIGNAL NAME	AWG	COLOR
	1 A17			
24	1A17A2 Q5- C		20	W -BR
25	1A17 E1- 1		20	W -BK
26	1A17 A2- 15		22	W
27	1A17 E1- 1		22	BK
27	1 A17- 28		20	CLEAR
28	1 A17- 27		20	CLEAR
29	1A17 T1- 12		22	G
30	1A17 T1- 10		22	BL
31	1 A17- 32		20	CLEAR
32	1 A17- 31		20	CLEAR
32	1 A17- 33		20	CLEAR
33	1A17 J2- 1	+50 TO PS SENSOR	22	V
33	1 A17- 32		20	CLEAR
33	1 A17- 34		20	CLEAR
34	1A17 J2- 2	+50 TO PT SENSOR	22	GY
34	1 A17- 33		20	CLEAR
35	1A17 J2- 56	-15V BAT DISCH R	22	R
36	1A17 J2- 55	+15V BAT DISCH R	22	BR
37	1A17 J2- 63	+ BAT CHARGE	22	O
38	1A17 J2- 65	- BAT CHARGE	22	Y

Power Supply Wire List
Table 4-14

FROM PIN	TO COMPONENT- PIN	SIGNAL NAME	AWG	COLOR
	1 SS1			
1	1 SS2- 1	SENSE SHIELD	99	SHD
1	1A17A1 P1- 50	SENSE SHIELD	22	BR
	1 SS2			
1	1A17 E1- 1	SENSE SHIELD	22	BR
1	1 SS1- 1	SENSE SHIELD	99	SHD
	1 SS3			
1	1A17A2 E4- 1	+5 LINE SHIELD	22	BR
1	1 SS4- 1	+5 LINE SHIELD	22	SHD
	1 SS4			
1	1A17 E1- 1	+5 LINE SHIELD	22	BR
1	1 SS3- 1	+5 LINE SHIELD	22	SHD
	1A17 A2			
1	1A17 WT1- 1	+24VDC	22	W -BR-BL
2	1A17 T1- 4		22	W -BK-G
3	1A17 T1- 6		22	W -BK-BL
4	1A17 T2- 7		22	W -BK-V
5	1A17A2 Q2- C		20	CLEAR
6	1A17 T1- 12		22	W -V
7	1A17 T1- 10		22	W -BL
8	1A17 T2- 9		22	W -BR-R

Power Supply Wire List
Table 4-14 (cont)

FROM PIN	TO COMPONENT- PIN	SIGNAL NAME	AWG	COLOR
	1A17 A2			
9	1A17 T2- 15		22	W -BR-G
10	1A17 T2- 13		22	W -BR-O
11	1A17A2 Q5- C		20	CLEAR
12	1A17 A2- 13		20	CLEAR
13	1A17 A2- 14		20	CLEAR
13	1A17 A2- 12		20	CLEAR
14	1A17 A2- 15		20	CLEAR
14	1A17 A2- 13		20	CLEAR
15	1A17A1 P1- 53		22	W -BK-BR
15	1 A17- 26		22	W
15	1A17 A2- 14		20	CLEAR
16	1A17A1 P1- 31		22	W -R -O
17	1A17A2 Q1- C		20	CLEAR
18	1A17A1 P1- 69		22	W -O
19	1A17 WT2- 1	+5 LINE	22	W
19	1A17 A2- 22		20	CLEAR
19	1A17A2 L1- 1		20	CLEAR
20	1A17A2 Q1- B		20	CLEAR
21	1A17A1 P1- 68		22	W -BK-R
22	1A17 A2- 19		20	CLEAR

Power Supply Wire List
Table 4-14 (cont)

FROM PIN	TO COMPONENT- PIN		SIGNAL NAME	AWG	COLOR
	1A17 A3				
1	1A17A3	J1- A			
2	1A17	T1- 1		22	BK
2	1A17	T2- 1		22	W -BK-BR
2	1A17A3	J1- C			
2	1A17A3	J1- D			
3	1A17A3	J1- P			
5	1A17	T1- 2		22	R
5	1A17	T2- 2		22	W -O
5	1A17A3	J1- E			
5	1A17A3	J1- H			
8	1A17	T1- 3		24	GY
8	1A17	T2- 3		22	W -BK-O
8	1A17A3	J1- N			
	1A17 E1				
1	1A17	T2- 8		22	BR
1	1A17	T2- 14		22	BR
1	1A17	T1- 5		22	BR
1	1A17	T2- 17		22	BR
1	1A17A2	E6- 1		16	BK
1	1A17	J2- 58	PWR, LMP COM	22	BR
1	1A17	J2- 11	+5 COM CRD RCK	22	BR
1	1A17	J2- 12	+5 COM CRD RCK	22	BR
1	1A17	J2- 13	+5 COM CRD RCK	22	BR
1	1A17	J2- 14	+5 COM F.P. MUX	22	BR
1	1A17	J2- 15	+5 COM F.P. MUX	22	BR
1	1A17	J2- 44	PS SENSOR COM	24	BR
1	1A17	J2- 45	PS SENSOR COM	24	BR
1	1A17	J2- 46	PS SENSOR COM	24	BR
1	1A17	J2- 47	PS SENSOR COM	24	BR
1	1A17	J2- 36	+15 COM CRD RCK	22	BR
1	1A17	J2- 40	PT SENSOR COM	24	BR
1	1A17	J2- 41	PT SENSOR COM	24	BR
1	1A17	J2- 42	PT SENSOR COM	24	BR

Power Supply Wire List
Table 4-14 (cont)

FROM PIN	TO COMPONENT-	PIN	SIGNAL NAME	AWG	COLOR
1A17 E1					
1	1A17	J2- 43	PT SENSOR COM	24	BR
1	1A17	J2- 16	LITES COM F.P. MUX	22	BR
1	1	SS2- 1	SENSE SHIELD	22	BR
1	1	SS4- 1	+5 LINE SHIELD	22	BR
1	1	A17- 27		22	BK
1	1	A17- 25		20	W -BK
1	1A17A1	P1- 51		22	O
1	1A17A1	P1- 52		22	Y
1	1A17A1	P1- 16		22	G
1A17 J2					
1	1	A17- 33	+50 TO PS SENSOR	22	V
2	1	A17- 34	+50 TO PT SENSOR	22	GY
3	1A17A1	P1- 42	+181 DISPLAYS	22	W
4	1A17	WT2- 1	+5 CARD RACK	22	O
5	1A17	WT2- 1	+5 CARD RACK	22	O
7	1A17	WT2- 1	+5 CARD RACK	22	O
8	1A17	WT2- 1	+5 F.P. MUX	22	O
10	1A17	WT2- 1	+5 F.P. MUX	22	O
11	1A17	E1- 1	+5 COM CRD RCK	22	BR
12	1A17	E1- 1	+5 COM CRD RCK	22	BR
13	1A17	E1- 1	+5 COM CRD RCK	22	BR
14	1A17	E1- 1	+5 COM F.P. MUX	22	BR
15	1A17	E1- 1	+5 COM F.P. MUX	22	BR
16	1A17	E1- 1	LITES COM F.P. MUX	22	BR

Power Supply Wire List
Table 4-14 (cont)

FROM PIN	TO COMPONENT- PIN		SIGNAL NAME	AWG	COLOR
	1A17 J2				
17	1A17A1	P1- 8	+26 LIGHTS	22	GY
18	1A17A1	P1- 41	+28 PS SENSOR	22	BL
20	1A17A1	P1- 7	+28 PT SENSOR	22	V
21	1A17A1	P1- 44	SV1C CRD RCK	24	W -R -V
22	1A17A1	P1- 47	SV1	22	W -R -BL
23	1A17	WT1- 1	SV1F	22	Y
24	1A17A1	P1- 17	SV2C	24	G
25	1A17A1	P1- 21	SV2	22	Y
26	1A17	WT1- 1	SV2F	22	Y
27	1A17	WT1- 1	SV3F	22	Y
28	1A17A1	P1- 43	SV3	22	W -G -V
29	1A17A1	P1- 48	SV3C CRD RCK	24	W -BL-V
30	1A17A1	P1- 37	SV4C CRD RCK	24	W -G -BL
31	1A17A1	P1- 4	SV4	22	W -O -V
32	1A17	WT1- 1	SV4F	22	Y
33	1A17A1	P1- 13	SV5,7C CRD RCK	24	W -O -BL
34	1A17	WT1- 1	SV5F	22	Y
35	1A17A1	P1- 12	SV5,7	22	W -O -G
36	1A17	E1- 1	+15 COM CRD RCK	22	BR
37	1A17A1	P1- 65	+15 PS SENSOR	24	W -BL

Power Supply Wire List
Table 4-14 (cont)

FROM PIN	TO COMPONENT- PIN			SIGNAL NAME	AWG	COLOR
	1A17 J2					
38	1A17A1	P1-	64	+15 PT SENSOR	24	W -V
39	1A17A1	P1-	63	+15 CARD RACK	24	W -BK-BR
40	1A17	E1-	1	PT SENSOR COM	24	BR
41	1A17	E1-	1	PT SENSOR COM	24	BR
42	1A17	E1-	1	PT SENSOR COM	24	BR
43	1A17	E1-	1	PT SENSOR COM	24	BR
44	1A17	E1-	1	PS SENSOR COM	24	BR
45	1A17	E1-	1	PS SENSOR COM	24	BR
46	1A17	E1-	1	PS SENSOR COM	24	BR
47	1A17	E1-	1	PS SENSOR COM	24	BR
48	1A17A1	P1-	25	-15 PS SENSOR	24	W -BK-O
49	1A17A1	P1-	26	-15 PT SENSOR	24	W -BK-G
50	1A17A1	P1-	27	-15 CARD RACK	24	W -BK-BL
51	1A17A1	P1-	29	-15 PT CARD RACK	22	W -BR-R
52	1A17A1	P1-	28	-15 PS CARD RACK	22	W -BK-V
53	1A17A1	P1-	66	+15 PT CARD RACK	22	W -G
54	1A17A1	P1-	32	+15 PS CARD RACK	22	W -O
55	1	A17-	36	+15V BAT DISCH R	22	BR
56	1	A17-	35	-15V BAT DISCH R	22	R
58	1A17	E1-	1	PWR, LMP COM	22	BR

FROM PIN	TO COMPONENT- PIN		SIGNAL NAME	AWG	COLOR
	1A17 J2				
63	1	A17- 37	+ BAT CHARGE	22	O
64	1A17	T1- 11		22	G
65	1	A17- 38	- BAT CHARGE	22	Y
66	1A17A1	P1- 10	EAROM-28V	24	W -BR-V
67	1A17A1	P1- 11	SV6,8C	24	R
70	1A17A1	P1- 67	+15 VHC	22	W -BK-R
71	1A17A1	P1- 40	SV9	22	BK
72	1A17	WT2- 1	+5 PT SENS	24	G
73	1A17A1	P1- 15	SV6,8	22	O
74	1A17A1	P1- 30	-15 VHC	22	W -BR-O
75	1A17	WT1- 1	SV9F	22	R
76	1A17	WT1- 1	SV6,8F	24	BK
77	1A17A1	P1- 46	SV9C	24	BR
78	1A17	WT2- 1	+5 PS SENS	24	G
80	1A17A1	P1- 55	400HZ RETURN	24	BK
82	1A17A1	P1- 56	400HZ	24	W

Power Supply Wire List
Table 4-14 (cont)

FROM PIN	TO COMPONENT- PIN			SIGNAL NAME	AWG	COLOR
	1A17 T1					
1	1A17	A3-	2		22	BK
2	1A17	A3-	5		22	R
3	1A17	A3-	8		24	GY
4	1A17A1	P1-	5		22	O
4	1A17	A2-	2		22	W -BK-G
5	1A17	E1-	1		22	BR
6	1A17A1	P1-	6		22	Y
6	1A17	A2-	3		22	W -BK-BL
10	1	A17-	30		22	BL
10	1A17	A2-	7		22	W -BL
11	1A17A2	E3-	1		20	G
11	1A17	J2-	64		22	G
12	1	A17-	29		22	G
12	1A17	A2-	6		22	W -V
	1A17 T2					
1	1A17	A3-	2		22	W -BK-BR
2	1A17	A3-	5		22	W -O
3	1A17	A3-	8		22	W -BK-O
7	1A17	A2-	4		22	W -BK-V
8	1A17	E1-	1		22	BR
9	1A17	A2-	8		22	W -BR-R
13	1A17	A2-	10		22	W -BR-O

FROM PIN	TO COMPONENT-	PIN	SIGNAL NAME	AWG	COLOR
1A17 T2					
14	1A17	E1- 1		22	BR
15	1A17	A2- 9		22	W -BR-G
16	1A17A1	P1- 60		24	W -R
17	1A17	E1- 1		22	BR
18	1A17A1	P1- 61		22	W -BR
1A17 WT1					
1	1A17	J2- 23	SV1F	22	Y
1	1A17	J2- 26	SV2F	22	Y
1	1A17	J2- 27	SV3F	22	Y
1	1A17	J2- 32	SV4F	22	Y
1	1A17	J2- 34	SV5F	22	Y
1	1A17	A2- 1	+24VDC	22	W -BR-BL
1	1A17A1	P1- 38		22	W -R -O
1	1A17A1	P1- 39		22	W -R -G
1	1A17	J2- 75	SV9F	22	R
1	1A17	J2- 76	SV6,8F	24	BK
1A17 WT2					
1	1A17	J2- 72	+5 PT SENS	24	G
1	1A17	J2- 78	+5 PS SENS	24	G
1	1A17A1	P1- 35	+5 SENSE	22	BK
1	1A17	J2- 4	+5 CARD RACK	22	O
1	1A17	J2- 5	+5 CARD RACK	22	O
1	1A17	J2- 7	+5 CARD RACK	22	O
1	1A17	J2- 8	+5 F.P. MUX	22	O
1	1A17	J2- 10	+5 F.P. MUX	22	O
1	1A17	A2- 19	+5 LINE	22	W
1	1A17A2	L1- 1	+5 LINE	22	BK

Power Supply Wire List
Table 4-14 (cont)

FROM PIN	TO COMPONENT- PIN		SIGNAL NAME	AWG	COLOR
	1A17A1 P1				
1	1A17A2	Q2- E		24	BL
2	1A17A2	Q6- C		24	W -BK
3	1A17A2	Q2- B		24	V
4	1A17	J2- 31	SV4	22	W -O -V
5	1A17	T1- 4		22	O
6	1A17	T1- 6		22	Y
7	1A17	J2- 20	+28 PT SENSOR	22	V
8	1A17	J2- 17	+26 LIGHTS	22	GY
9	1A17A2	Q6- B		24	W
10	1A17	J2- 66	EAROM-28V	24	W -BR-V
11	1A17	J2- 67	SV6,8C	24	R
12	1A17	J2- 35	SV5,7	22	W -O -G
13	1A17	J2- 33	SV5,7C CRD RCK	24	W -O -BL
14	1A17A2	Q5- C		22	W -R -G
15	1A17	J2- 73	SV6,8	22	O
16	1A17	E1- 1		22	G
17	1A17	J2- 24	SV2C	24	G
18	1A17A2	Q5- B		24	BR
19	1A17A2	Q5- E		22	R
20	1A17A2	Q4- E		22	BK

Power Supply Wire List
Table 4-14 (cont)

FROM PIN	TO COMPONENT- PIN	SIGNAL NAME	AWG	COLOR
	1A17A1 P1			
21	1A17 J2- 25	SV2	22	Y
22	1A17A2 Q3- B		24	W -O -BL
23	1A17A2 Q3- E		22	W -O -V
24	1A17A2 Q3- C		22	W -O -G
25	1A17 J2- 48	-15 PS SENSOR	24	W -BK-O
26	1A17 J2- 49	-15 PT SENSOR	24	W -BK-G
27	1A17 J2- 50	-15 CARD RACK	24	W -BK-BL
28	1A17 J2- 52	-15 PS CARD RACK	22	W -BK-V
29	1A17 J2- 51	-15 PT CARD RACK	22	W -BR-R
30	1A17 J2- 74	-15 VHC	22	W -BR-O
31	1A17 A2- 16		22	W -R -O
32	1A17 J2- 54	+15 PS CARD RACK	22	W -O
33	1A17A2 Q4- B		24	W -BL-V
34	1A17A2 CR3- C		22	W -R -V
35	1A17 WT2- 1	+5 SENSE	22	BK
36	1A17A2 Q6- E		24	GY
37	1A17 J2- 30	SV4C CRD RCK	24	W -G -BL
38	1A17 WT1- 1		22	W -R -O
39	1A17 WT1- 1		22	W -R -G
40	1A17 J2- 71	SV9	22	BK

Power Supply Wire List
Table 4-14 (cont)

FROM PIN	TO COMPONENT- PIN		SIGNAL NAME	AWG	COLOR
	1A17A1 P1				
41	1A17	J2- 18	+28 PS SENSOR	22	BL
42	1A17	J2- 3	+181 DISPLAYS	22	W
43	1A17	J2- 28	SV3	22	W -G -V
44	1A17	J2- 21	SV1C CRD RCK	24	W -R -V
46	1A17	J2- 77	SV9C	24	BR
47	1A17	J2- 22	SV1	22	W -R -BL
48	1A17	J2- 29	SV3C CRD RCK	24	W -BL-V
49	1A17A2	Q2- C		22	W -BR-V
50	1	SS1- 1	SENSE SHIELD	22	BR
51	1A17	E1- 1		22	O
52	1A17	E1- 1		22	Y
53	1A17	A2- 15		22	W -BK-BR
55	1A17	J2- 80	400HZ RETURN	24	BK
56	1A17	J2- 82	400HZ	24	W
57	1A17A2	Q4- C		22	W -G -V
58	1A17A2	Q4- C		24	W -G -BL
59	1A17A2	Q1- C		22	W -BK-O
60	1A17	T2- 16		24	W -R
61	1A17	T2- 18		22	W -BR
63	1A17	J2- 39	+15 CARD RACK	24	W -BK-BR

FROM PIN	TO COMPONENT- PIN		SIGNAL NAME	AWG	COLOR
1A17A1 P1					
64	1A17	J2- 38	+15 PT SENSOR	24	W -V
65	1A17	J2- 37	+15 PS SENSOR	24	W -BL
66	1A17	J2- 53	+15 PT CARD RACK	22	W -G
67	1A17	J2- 70	+15 VHC	22	W -BK-R
68	1A17	A2- 21		22	W -BK-R
69	1A17	A2- 18		22	W -O
1A17A2 E3					
1	1A17	T1- 11		20	G
1A17A2 E4					
1	1	SS3- 1	+5 LINE SHIELD	22	BR
1A17A2 E6					
1	1A17	E1- 1		16	BK

Power Supply Wire List
Table 4-14 (cont)

FROM PIN	TO COMPONENT- PIN	SIGNAL NAME	AWG	COLOR
1A17A2 L1				
1	1A17 WT2- 1	+5 LINE	22	BK
1	1A17 A2- 19		20	CLEAR
2	1A17A2 CR3- C		20	CLEAR
2	1A17A2 Q1- E		20	CLEAR
1A17A2 Q1				
E	1A17A2 L1- 2		20	CLEAR
B	1A17 A2- 20		20	CLEAR
C	1A17A1 P1- 59		22	W -BK-O
C	1A17 A2- 17		20	CLEAR
1A17A2 Q2				
E	1A17A1 P1- 1		24	BL
B	1A17A1 P1- 3		24	V
C	1A17A1 P1- 49		22	W -BR-V
C	1A17 A2- 5		20	CLEAR

Power Supply Wire List
Table 4-14 (cont)

FROM PIN	TO COMPONENT- PIN	SIGNAL NAME	AWG	COLOR
	1A17A2 Q3			
E	1A17A1 P1- 23		22	W -O -V
B	1A17A1 P1- 22		24	W -O -BL
C	1A17A1 P1- 24		22	W -O -G
	1A17A2 Q4			
E	1A17A1 P1- 20		22	BK
B	1A17A1 P1- 33		24	W -BL-V
C	1A17A1 P1- 58		24	W -G -BL
C	1A17A1 P1- 57		22	W -G -V
	1A17A2 Q5			
E	1A17A1 P1- 19		22	R
B	1A17A1 P1- 18		24	BR
C	1A17A1 P1- 14		22	W -R -G
C	1A17 A2- 11		20	CLEAR
C	1 A17- 24		20	W -BR

Power Supply Wire List
Table 4-14 (cont)

FROM PIN	TO COMPONENT-	PIN	SIGNAL NAME	AWG	COLOR
1A17A2 Q6					
E	1A17A1	P1- 36		24	GY
B	1A17A1	P1- 9		24	W
C	1A17A1	P1- 2		24	W -BK
1A17A2 CR3					
C	1A17A1	P1- 34		22	W -R -V
C	1A17A2	L1- 2		20	CLEAR
1A17A3 E1					
1	1A17A3	J1- B			
1	1A17A3	J1- L			
1	1A17A3	J1- R			
1A17A3 J1					
A	1A17	A3- 1			
B	1A17A3	E1- 1			
C	1A17	A3- 2			
D	1A17	A3- 2			
E	1A17	A3- 5			
F	1A17A3	Q1- MT1			
H	1A17	A3- 5			
J	1A17A3	Q1- MT2			
L	1A17A3	E1- 1			

Power Supply Wire List
Table 4-14 (cont)

FROM PIN	TO COMPONENT-	PIN	SIGNAL NAME	AWG	COLOR
1A17A3 J1					
M	1A17A3	Q1- MT2			
N	1A17	A3- 8			
P	1A17	A3- 3			
R	1A17A3	E1- 1			
1A17A3 Q1					
MT1	1A17A3	J1- F			
MT2	1A17A3	J1- J			
MT2	1A17A3	J1- M			

WL4048087
REV A

NOTES:
1. To provide a complete alphanumeric listing of all termination points, each wire appears twice. Both appearances are identical with the exception that the second appearance has the "FROM" and "TO" ends swapped.
2. An asterisk before the "PIN" designation indicates lower case letter(s).
3. An asterisk within "SIGNAL NAME" denotes logical "NOT."

FROM PIN	TO COMPONENT- PIN		SIGNAL NAME	AWG	COLOR
	1 A15				
1	1A14	P2- 36	S FAIL*	24	W -G
2	1A14	P2- 18	COMMON	22	BL
3	1A14	P2- 35	COMMON	22	W -O
4	1A14	P2- 17	Y1	24	G
5	1A14	P2- 34	YO	24	W -R
6	1A14	P2- 16	Y2	24	Y
7	1A14	P2- 33	+5 VDC	22	W -BR
8	1A14	P2- 15	+5 VDC	24	BR
9	1A14	P2- 32	ZO	24	W -BK
10	1A14	P2- 14	Z1	24	BR
11	1A14	P2- 31	Y3	24	W
17	1A14	P2- 29	TS2-2	24	GY
18	1A14	P2- 11	TS2-1	24	BK
19	1A14	P2- 28	TS2-3	24	V
20	1A14	P2- 10	TS2-0	24	R

FROM PIN	TO COMPONENT-	PIN	SIGNAL NAME	AWG	COLOR
1	A16				
1	1A14	P2- 27	S FAIL*	24	W -G
2	1A14	P2- 9	COMMON	22	BL
3	1A14	P2- 26	COMMON	22	W -O
4	1A14	P2- 8	Y1	24	G
5	1A14	P2- 25	YO	24	W -R
6	1A14	P2- 7	Y2	24	Y
7	1A14	P2- 24	+5 VDC	22	W -BR
8	1A14	P2- 6	+5 VDC	22	O
9	1A14	P2- 23	Z2	24	W -BK
10	1A14	P2- 5	Z3	24	BR
11	1A14	P2- 22	Y3	24	W
17	1A14	P2- 20	TS2-2	24	GY
18	1A14	P2- 2	TS2-1	24	BK
19	1A14	P2- 19	TS2-3	24	V
20	1A14	P2- 1	TS2-0	24	R

FROM PIN	TO COMPONENT- PIN		SIGNAL NAME	AWG	COLOR
	1A14	P2			
1	1	A16- 20	TS2-0	24	R
2	1	A16- 18	TS2-1	24	BK
5	1	A16- 10	Z3	24	BR
6	1	A16- 8	+5 VDC	22	O
7	1	A16- 6	Y2	24	Y
8	1	A16- 4	Y1	24	G
9	1	A16- 2	COMMON	22	BL
10	1	A15- 20	TS2-0	24	R
11	1	A15- 18	TS2-1	24	BK
14	1	A15- 10	Z1	24	BR
15	1	A15- 8	+5 VDC	24	BR
16	1	A15- 6	Y2	24	Y
17	1	A15- 4	Y1	24	G
18	1	A15- 2	COMMON	22	BL
19	1	A16- 19	TS2-3	24	V
20	1	A16- 17	TS2-2	24	GY
22	1	A16- 11	Y3	24	W
23	1	A16- 9	Z2	24	W -BK
24	1	A16- 7	+5 VDC	22	W -BR
25	1	A16- 5	YO	24	W -R

FROM PIN	TO COMPONENT- PIN		SIGNAL NAME	AWG	COLOR
1A14 P2					
26	1	A16- 3	COMMON	22	W -O
27	1	A16- 1	S FAIL*	24	W -G
28	1	A15- 19	TS2-3	24	V
29	1	A15- 17	TS2-2	24	GY
31	1	A15- 11	Y3	24	W
32	1	A15- 9	Z0	24	W -BK
33	1	A15- 7	+5 VDC	22	W -BR
34	1	A15- 5	Y0	24	W -R
35	1	A15- 3	COMMON	22	W -O
36	1	A15- 1	S FAIL*	24	W -G

WL4026194
REV -

NOTES: 1. To provide a complete alphanumeric listing of all termination points, each wire appears twice. Both appearances are identical with the exception that the second appearance has the "FROM" and "TO" ends swapped.

2. An asterisk before the "PIN" designation indicates lower case letter(s).

3. An asterisk within "SIGNAL NAME" denotes logical "NOT."

FROM PIN	TO COMPONENT- PIN	SIGNAL NAME	AWG	COLOR
	1 A15			
14	1A17 P2- 3	+181V	24	O
14	1 A16- 14	+181V	24	O
	1 A16			
14	1 A15- 14	+181V	24	O
	1 B1			
1	1A17 P1- H	FAN LO	26	W
4	1A17 P1- A	FAN COM	26	O
5	1A17 P1- D	FAN HI	26	R
	1 E5			
1	1 SS2- 1		20	BK
	1 F1			
1	1 TB5- 2	-15VDC BAT	22	W -O -G
2	1A20 P1- 2X	-15VDC BAT	22	W -O -BL

Front Panel Assembly Wire List
Table 4-16

FROM PIN	TO COMPONENT- PIN		SIGNAL NAME	AWG	COLOR
1	F2				
1	1	TB5- 3	+15VDC BAT	22	W -G -BL
2	1A20	P1- 2Z	+15VDC BAT	22	W -G -V
1	L1				
1	1A20	P1- 1W	AUTO VENT LT HI	24	BR
2	1A20	P1- *1A	AUTO VENT LT LOW	24	O
1	L2				
1	1A20	P1- 2W	BAT LOW LT HI	24	Y
2	1A20	P1- *2A	BAT LOW LT LOW	24	BL
1	S1				
1	1	S2- 1	SIGNAL COMMON	22	CLEAR
1	1A14	P4- 6	SIGNAL COMMON	22	BK
2	1A14	P4- 28	M1L LIGHT	24	GY
3	1A14	P5- 14	M1	24	Y
4	1	S2- 4	LAMP POWER +26 REG	22	CLEAR
4	1A17	P2- 17	LAMP POWER +26 REG	22	W -BR

Front Panel Assembly Wire List
Table 4-16 (cont)

FROM PIN	TO COMPONENT- PIN		SIGNAL NAME	AWG	COLOR
1	S2				
1	1	S3- 1	SIGNAL COMMON	22	CLEAR
1	1	S1- 1	SIGNAL COMMON	22	CLEAR
2	1A14	P4- 23	M2L LIGHT	24	BR
3	1A14	P5- 15	M2	24	BK
4	1	S3- 4	LAMP POWER +26 REG	22	CLEAR
4	1	S1- 4	LAMP POWER +26 REG	22	CLEAR
1	S3				
1	1	S4- 1	SIGNAL COMMON	22	CLEAR
1	1A14	P5- 21	M3 RTN	26	W
1	1	S2- 1	SIGNAL COMMON	22	CLEAR
1	1A20	P1- 1C	SET M3 RTN	26	W -V
2	1A14	P4- 27	L=M3 LIGHT	24	R
2	1A20	P1- 3D	L=M3 LIGHT	24	V
3	1A14	P5- 13	L SET M3	26	O
3	1A20	P1- 2C	L SET M3	26	BR
4	1	S4- 4	LAMP POWER +26 REG	22	CLEAR
4	1	S2- 4	LAMP POWER +26 REG	22	CLEAR

Front Panel Assembly Wire List
Table 4-16 (cont)

FROM PIN	TO COMPONENT- PIN		SIGNAL NAME	AWG	COLOR
1 S4					
1	1	S5- 1	SIGNAL COMMON	22	R
1	1	S3- 1	SIGNAL COMMON	22	CLEAR
2	1A14	P4- 22	M4L LIGHT	24	Y
3	1A14	P5- 7	M4	24	G
4	1	S20- 4	LAMP POWER +26 REG	22	CLEAR
4	1	S3- 4	LAMP POWER +26 REG	22	CLEAR
1 S5					
1	1	S7- 2	SIGNAL COMMON	22	R
1	1	S4- 1	SIGNAL COMMON	22	R
2	1A14	P5- 41	CE	24	W -BL-V
1 S6					
1	1A14	P4- 25	ALRL	24	W -O -BL
2	1	S6- 3	SIGNAL COMMON	22	CLEAR
2	1	S7- 3	SIGNAL COMMON	22	W -O -V
3	1	S12- 1	SIGNAL COMMON	22	W -G -BL
3	1	S6- 2	SIGNAL COMMON	22	CLEAR
4	1	S12- 4	LAMP POWER +26 REG	22	W -G -V
4	1	S7- 4	LAMP POWER +26 REG	22	W -G -V
5	1A14	P5- 5	ALR NC	24	W -O -G
6	1A14	P5- 4	ALR NO	24	W -R -V

Front Panel Assembly Wire List
Table 4-16 (cont)

FROM PIN	TO COMPONENT- PIN		SIGNAL NAME	AWG	COLOR
1 S7					
1	1A14	P4- 24	ASRL	24	G
2	1	S7- 3	SIGNAL COMMON	22	CLEAR
2	1	S5- 1	SIGNAL COMMON	22	R
3	1	S6- 2	SIGNAL COMMON	22	W -O -V
3	1	S7- 2	SIGNAL COMMON	22	CLEAR
4	1	S6- 4	LAMP POWER +26 REG	22	W -G -V
4	1	S20- 4	LAMP POWER +26 REG	22	CLEAR
5	1A14	P5- 6	ASR NC	24	V
6	1A14	P5- 32	ASR NO	24	BL
1 S8					
A-OY	1	S8B-OY	PS-CD COMMON	24	CLEAR
A-OY	1A14	P3- 32	PS-CD COMMON	22	BK
A- 1	1A14	P3- 34	PS-CDO-DBO	24	W -O -BL
A- 2	1A14	P3- 12	PS-CDO-DB1	24	W -R
A- 4	1A14	P3- 33	PS-CDO-DB2	24	W -O -G
A- 8	1A14	P3- 11	PS-CDO-DB3	24	W -BR
B-OY	1	S8C-OY	PS-CD COMMON	24	CLEAR
B-OY	1	S8A-OY	PS-CD COMMON	24	CLEAR
B- 1	1A14	P3- 36	PS-CD1-DBO	24	W -R -V
B- 2	1A14	P3- 14	PS-CD1-DB1	24	W -G
B- 4	1A14	P3- 35	PS-CD1-DB2	24	W -BK
B- 8	1A14	P3- 13	PS-CD1-DB3	24	W -O

Front Panel Assembly Wire List
Table 4-16 (cont)

FROM PIN	TO COMPONENT- PIN		SIGNAL NAME	AWG	COLOR
1 S8					
C-0Y	1	S8D-0Y	PS-CD COMMON	24	CLEAR
C-0Y	1	S8B-0Y	PS-CD COMMON	24	CLEAR
C- 1	1A14	P3- 38	PS-CD2-DB0	24	W -G -BL
C- 2	1A14	P3- 16	PS-CD2-DB1	24	W -V
C- 4	1A14	P3- 37	PS-CD2-DB2	24	W -O -V
C- 8	1A14	P3- 15	PS-CD2-DB3	24	W -BL
D-0Y	1	S8E-0Y	PS-CD COMMON	24	CLEAR
D-0Y	1	S8C-0Y	PS-CD COMMON	24	CLEAR
D- 1	1A14	P3- 40	PS-CD3-DB0	24	W -BL-V
D- 2	1A14	P3- 18	PS-CD3-DB1	24	W -BK-R
D- 4	1A14	P3- 39	PS-CD3-DB2	24	W -G -V
D- 8	1A14	P3- 17	PS-CD3-DB3	24	W -BK-BR
E-0Y	1	S8F-0Y	PS-CD COMMON	24	CLEAR
E-0Y	1	S8D-0Y	PS-CD COMMON	24	CLEAR
E- 1	1A14	P3- 42	PS-CD4-DB0	24	Y
E- 2	1A14	P3- 20	PS-CD4-DB1	24	W -BK-G
E- 4	1A14	P3- 41	PS-CD4-DB2	24	G
E- 8	1A14	P3- 19	PS-CD4-DB3	24	W -BK-O
F-0Y	1	S8E-0Y	PS-CD COMMON	24	CLEAR
F- 1	1A14	P3- 44	PS-CD5-DB0	24	R
F- 2	1A14	P3- 22	PS-CD5-DB1	24	W -BK-V
F- 4	1A14	P3- 43	PS-CD5-DB2	24	O

Front Panel Assembly Wire List
Table 4-16 (cont)

FROM PIN	TO COMPONENT- PIN		SIGNAL NAME	AWG	COLOR
1 S8					
F- 8	1A14	P3- 21	PS-CD5-DB3	24	W -BK-BL
G-OVC	1A14	P4- 31	PSDP1	24	W -R
G-OG	1	S8H-OG	PS DP+5	24	CLEAR
H-OVC	1A14	P4- 29	PSDP3	24	V
H-OG	1A14	P5- 1	PS DP+5	24	BR
H-OG	1	S8G-OG	PS DP+5	24	CLEAR
1 S9					
A-OY	1	S9B-OY	PS-RD COMMON	24	CLEAR
A- 1	1A14	P3- 24	PS-RD1-DB0	24	W -BR-O
A- 2	1A14	P3- 2	PS-RD1-DB1	24	O
A- 4	1A14	P3- 23	PS-RD1-DB2	24	W -BR-R
A- 8	1A14	P3- 1	PS-RD1-DB3	24	R
B-OY	1	S9A-OY	PS-RD COMMON	24	CLEAR
B-OY	1	S9C-OY	PS-RD COMMON	24	CLEAR
B- 1	1A14	P3- 26	PS-RD2-DB0	24	W -BR-BL
B- 2	1A14	P3- 4	PS-RD2-DB1	24	G
B- 4	1A14	P3- 25	PS-RD2-DB2	24	W -BR-G
B- 8	1A14	P3- 3	PS-RD2-DB3	24	Y
C-OY	1	S9B-OY	PS-RD COMMON	24	CLEAR
C-OY	1	S9D-OY	PS-RD COMMON	24	CLEAR
C- 1	1A14	P3- 28	PS-RD3-DB0	24	W -R -O

FROM PIN	TO COMPONENT- PIN		SIGNAL NAME	AWG	COLOR
1 S9					
C- 2	1A14	P3- 6	PS-RD3-DB1	24	V
C- 4	1A14	P3- 27	PS-RD3-DB2	24	W -BR-V
C- 8	1A14	P3- 5	PS-RD3-DB3	24	BL
D-0Y	1	S9C-0Y	PS-RD COMMON	24	CLEAR
D-0Y	1A14	P3- 9	PS-RD COMMON	22	BR
D- 1	1A14	P3- 30	PS-RD4-DB0	24	W -R -BL
D- 2	1A14	P3- 8	PS-RD4-DB1	24	W
D- 4	1A14	P3- 29	PS-RD4-DB2	24	W -R -G
D- 8	1A14	P3- 7	PS-RD4-DB3	24	GY
1 S10					
A-0Y	1	S10B-0Y	PT-CD COMMON	24	CLEAR
A- 1	1A14	P1- 22	PT-CD0-DB0	24	W -V
A- 2	1A14	P1- 2	PT-CD0-DB1	24	O
A- 4	1A14	P1- 21	PT-CD0-DB2	24	W -BL
A- 8	1A14	P1- 1	PT-CD0-DB3	24	R
B-0Y	1	S10A-0Y	PT-CD COMMON	24	CLEAR
B-0Y	1	S10C-0Y	PT-CD COMMON	24	CLEAR
B- 1	1A14	P1- 24	PT-CD1-DB0	24	W -BK-R
B- 2	1A14	P1- 4	PT-CD1-DB1	24	G
B- 4	1A14	P1- 23	PT-CD1-DB2	24	W -BK-BR
B- 8	1A14	P1- 3	PT-CD1-DB3	24	Y

Front Panel Assembly Wire List
Table 4-16 (cont)

FROM PIN	TO COMPONENT- PIN		SIGNAL NAME	AWG	COLOR
	1 S10				
C-OY	1	S10B-OY	PT-CD COMMON	24	CLEAR
C-OY	1	S10D-OY	PT-CD COMMON	24	CLEAR
C- 1	1A14	P1- 26	PT-CD2-DB0	24	W -BK-G
C- 2	1A14	P1- 6	PT-CD2-DB1	24	V
C- 4	1A14	P1- 25	PT-CD2-DB2	24	W -BK-O
C- 8	1A14	P1- 5	PT-CD2-DB3	24	BL
D-OY	1	S10C-OY	PT-CD COMMON	24	CLEAR
D-OY	1	S10E-OY	PT-CD COMMON	24	CLEAR
D- 1	1A14	P1- 28	PT-CD3-DB0	24	W -BR-V
D- 2	1A14	P1- 8	PT-CD3-DB1	24	GY
D- 4	1A14	P1- 27	PT-CD3-DB2	24	W -BK-BL
D- 8	1A14	P1- 7	PT-CD3-DB3	24	W -O
E-OY	1	S10D-OY	PT-CD COMMON	24	CLEAR
E-OY	1	S10F-OY	PT-CD COMMON	24	CLEAR
E- 1	1A14	P1- 30	PT-CD4-DB0	24	W -BR-O
E- 2	1A14	P1- 10	PT-CD4-DB1	24	W -BK
E- 4	1A14	P1- 29	PT-CD4-DB2	24	W -BR-R
E- 8	1A14	P1- 9	PT-CD4-DB3	24	W
F-OY	1	S10E-OY	PT-CD COMMON	24	CLEAR
F-OY	1A14	P1- 13	PT-CD COMMON	22	BR
F- 1	1A14	P1- 32	PT-CD5-DB0	24	W -BR-BL
F- 2	1A14	P1- 12	PT-CD5-DB1	24	W -R

Front Panel Assembly Wire List
Table 4-16 (cont)

FROM PIN	TO COMPONENT- PIN		SIGNAL NAME	AWG	COLOR
1 S10					
F- 4	1A14	P1- 31	PT-CD5-DB2	24	W -BR-G
F- 8	1A14	P1- 11	PT-CD5-DB3	24	W -BR
G-OVC	1A14	P4- 30	PTDP1	24	W -BK-R
G-OG	1	S10H-OG	PT DP+5	24	CLEAR
H-OVC	1A14	P4- 32	PTDP3	24	W -BK-G
H-OG	1	S10G-OG	PT DP+5	24	CLEAR
H-OG	1A14	P5- 28	PT DP+5	24	W -O
1 S11					
A-OY	1	S11B-OY	PT-RD COMMON	24	CLEAR
A-OY	1A14	P1- 34	PT-RD COMMON	22	BK
A- 1	1A14	P1- 36	PT-RDO-DBO	24	W -R -G
A- 2	1A14	P1- 16	PT-RDO-DB1	24	W -G
A- 4	1A14	P1- 35	PT-RDO-DB2	24	W -R -O
A- 8	1A14	P1- 15	PT-RDO-DB3	24	W -BK-V
B-OY	1	S11C-OY	PT-RD COMMON	24	CLEAR
B-OY	1	S11A-OY	PT-RD COMMON	24	CLEAR
B- 1	1A14	P1- 38	PT-RD1-DBO	24	W -R -V
B- 2	1A14	P1- 18	PT-RD1-DB1	24	W -G -BL
B- 4	1A14	P1- 37	PT-RD1-DB2	24	W -R -BL
B- 8	1A14	P1- 17	PT-RD1-DB3	24	W -O -V
C-OY	1	S11B-OY	PT-RD COMMON	24	CLEAR

Front Panel Assembly Wire List
Table 4-16 (cont)

FROM PIN	TO COMPONENT- PIN		SIGNAL NAME	AWG	COLOR
	1 S11				
C- 1	1A14	P1- 40	PT-RD2-DB0	24	W -O -BL
C- 2	1A14	P1- 20	PT-RD2-DB1	24	W -BL-V
C- 4	1A14	P1- 39	PT-RD2-DB2	24	W -O -G
C- 8	1A14	P1- 19	PT-RD2-DB3	24	W -G -V
	1 S12				
1	1	S13- 1	SIGNAL COMMON	22	CLEAR
1	1	S6- 3	SIGNAL COMMON	22	W -G -BL
2	1A14	P4- 53	ATEL	24	GY
3	1A14	P5- 24	ATE	24	W
4	1	S13- 4	LAMP POWER +26 REG	22	CLEAR
4	1	S6- 4	LAMP POWER +26 REG	22	W -G -V
	1 S13				
1	1	S14- 1	SIGNAL COMMON	22	CLEAR
1	1	S12- 1	SIGNAL COMMON	22	CLEAR
2	1A14	P4- 54	PANL	24	W -BK
3	1A14	P5- 42	PAN	24	W -BR
4	1	S12- 4	LAMP POWER +26 REG	22	CLEAR
4	1	S17- 4	LAMP POWER +26 REG	22	CLEAR

Front Panel Assembly Wire List
Table 4-16 (cont)

FROM PIN	TO COMPONENT-	PIN	SIGNAL NAME	AWG	COLOR
1 S14					
1	1	S13- 1	SIGNAL COMMON	22	CLEAR
1	1	S15- 3C	SIGNAL COMMON	22	CLEAR
2	1A14	P4- 52	MSRL	24	W -R
3	1A14	P5- 25	MSR	24	W -O
4	1	S17- 4	LAMP POWER +26 REG	22	CLEAR
4	1	S16- 4	LAMP POWER +26 REG	22	CLEAR
1 S15					
1NO	1A20	P1- 2D	DI NO	24	W -BL
2NC	1A20	P1- 2E	DI NC	24	W -V
3C	1	S14- 1	SIGNAL COMMON	22	CLEAR
3C	1	S17- 3	SIGNAL COMMON	22	BK
C	1	S16- 4	LAMP POWER +26 REG	22	CLEAR
C	1	S18- 4	LAMP POWER +26 REG	22	CLEAR
1	1A20	P1- *4C	PT DYNAMIC LT	24	W -R
1	1	S15- 4	PT DYNAMIC LT	22	CLEAR
2	1	S15- 3	PS DYNAMIC LT	22	CLEAR
2	1A20	P1- 4W	PS DYNAMIC LT	24	R
3	1	S15- 2	PS DYNAMIC LT	22	CLEAR
4	1	S15- 1	PT DYNAMIC LT	22	CLEAR

FROM PIN	TO COMPONENT- PIN	SIGNAL NAME	AWG	COLOR
	1 S16			
1	1A17 P2- 58	COM	22	W -BK
2	1A17 P1- M	HOT PWR SW	22	BK
4	1 S14- 4	LAMP POWER +26 REG	22	CLEAR
4	1 S15- C	LAMP POWER +26 REG	22	CLEAR
5	1A17 P1- P	PWR SW	22	W
	1 S17			
1	1A14 P5- 44	SMC	24	W -BK-R
2	1A14 P4- 55	SMCL	24	W -BK-BR
3	1 S18- 3	SIGNAL COMMON	22	CLEAR
3	1 S15- 3C	SIGNAL COMMON	22	BK
4	1 S14- 4	LAMP POWER +26 REG	22	CLEAR
4	1 S13- 4	LAMP POWER +26 REG	22	CLEAR
	1 S18			
1	1A14 P4- 50	DQCLL	24	W -BK-G
2	1 S18- 3	SIGNAL COMMON	22	CLEAR
2	1 S19- 3	SIGNAL COMMON	22	CLEAR
3	1 S18- 2	SIGNAL COMMON	22	CLEAR
3	1 S17- 3	SIGNAL COMMON	22	CLEAR
4	1 S19- 4	LAMP POWER +26 REG	22	CLEAR
4	1 S15- C	LAMP POWER +26 REG	22	CLEAR
5	1A14 P5- 33	DQCL NC	24	W -BK-BL
6	1A14 P5- 31	DQCL NO	24	BK

Front Panel Assembly Wire List
Table 4-16 (cont)

FROM PIN	TO COMPONENT-	PIN	SIGNAL NAME	AWG	COLOR
	1 S19				
1	1A14	P4- 51	DSSLL	24	W -BK-V
2	1	S20- 3	SIGNAL COMMON	22	BL
2	1	S19- 3	SIGNAL COMMON	22	CLEAR
3	1	S19- 2	SIGNAL COMMON	22	CLEAR
3	1	S18- 2	SIGNAL COMMON	22	CLEAR
4	1	S18- 4	LAMP POWER +26 REG	22	CLEAR
5	1A14	P5- 30	DSSL NC	24	W -BR-R
6	1A14	P5- 29	DSSL NO	24	W -R
	1 S20				
1	1A14	P4- 56	M5L	24	W -BR-O
2	1	S20- 3	SIGNAL COMMON	22	CLEAR
3	1	S20- 2	SIGNAL COMMON	22	CLEAR
3	1	S19- 2	SIGNAL COMMON	22	BL
4	1	S4- 4	LAMP POWER +26 REG	22	CLEAR
4	1	S7- 4	LAMP POWER +26 REG	22	CLEAR
5	1A14	P5- 17	M5 NC	24	W -BR-G
6	1A14	P5- 40	M5 NO	24	W -BK-BR

Front Panel Assembly Wire List
Table 4-16 (cont)

FROM PIN	TO COMPONENT- PIN	SIGNAL NAME	AWG	COLOR
	1 FL1			
1	1A17 P1- E	NEUTRAL	22	BK
	1 FL2			
1	1A17 P1- J	HOT PWR SW	22	W
	1 SS1			
1	1A17 P1- B	SHLD	24	BK
1		SHIELD	26	SHD
	1 SS2			
1	1 E5- 1		20	BK
	1 SS3			
1		SHIELD	26	SHD
1	1A17 P1- R	SHLD	24	BK
	1 SS4			
1		SHIELD	26	SHD
1	1A17 P1- L	SHLD	24	BK

Front Panel Assembly Wire List
Table 4-16 (cont)

FROM PIN	TO COMPONENT- PIN	SIGNAL NAME	AWG	COLOR
	1 SS5			
1	1 SS6- 1	PS SINE SHIELD	24	SHD
1	1A18 P1- *C	PS SINE SHIELD	24	BK
	1 SS6			
1	1A20 P1- *6C	PS SINE SHIELD	24	BK
1	1 SS5- 1	PS SINE SHIELD	24	SHD
	1 SS7			
1	1 SS8- 1	PT SQ OUTPUT SHD	24	SHD
1	1A19 P1- V	PT SQ OUTPUT SHD	24	BK
	1 SS8			
1	1A20 P1- *2C	PT SQ OUTPUT SHD	24	BK
1	1 SS7- 1	PT SQ OUTPUT SHD	24	SHD
	1 SS9			
1	1 SS10- 1	PS SQ OUTPUT SHD	24	SHD
1	1A18 P1- V	PS SQ OUTPUT SHD	24	BK

Front Panel Assembly Wire List
Table 4-16 (cont)

FROM PIN	TO COMPONENT- PIN	SIGNAL NAME	AWG	COLOR
1 SS10				
1	1A20 P1- *2B	PS SQ OUTPUT SHD	24	BK
1	1 SS9- 1	PS SQ OUTPUT SHD	24	SHD
1 SS11				
1	1 SS12- 1	PT SINE SHIELD	24	SHD
1	1A19 P1- *C	PT SINE SHIELD	24	BK
1 SS12				
1	1A20 P1- 6W	PT SINE SHIELD	24	BK
1	1 SS11- 1	PT SINE SHIELD	24	SHD
1 TB1				
1	1A20 P1- 2S	AUTO SLEW PS V	24	W -BK-O
2	1A20 P1- 2T	AUTO SLEW PS VGND	24	W -BK-G
3	1A20 P1- 2U	AUTO SLEW PS OUT	24	W -BK-BL
4	1A20 P1- 2V	AUTO SLEW PS OUTRN	24	W -BK-V
5	1A17 P2- 23	SV1F HI	24	BR
6	1A17 P2- 22	SV1 LOW	24	BK
7	1A17 P2- 34	SV5F +SV7F HI	24	GY
7	1 TB1- 11	SV5F + SV7F HI	24	Y
8	1A17 P2- 35	SV5 + SV7 LOW	24	W
8	1 TB1- 12	SV5 + SV7 LOW	24	G
9	1A17 P2- 26	SV2F HI	24	O
10	1A17 P2- 25	SV2 LOW	24	R

Front Panel Assembly Wire List
Table 4-16 (cont)

FROM PIN	TO COMPONENT- PIN		SIGNAL NAME	AWG	COLOR
	1 TB1				
11	1	TB1- 7	SV5F + SV7F HI	24	Y
12	1	TB1- 8	SV5 + SV7 LOW	24	G
13			SPARE		
14			SPARE		
15			SPARE		
16			SPARE		
	1 TB2				
1	1A20	P1- 5X	PS C.V. (RED)	22	R
2	1A20	P1- 6X	PS C.V. (BLK)	22	BK
3	1A20	P1- 1L	PS INLET NOZZLE	22	W -BK-G
4	1A20	P1- 2L	PS NOZZLE GND	22	W -BK-BR
5	1A20	P1- 3L	PS EXHAUST NOZZLE	22	BR
	1 TB3				
1	1A20	P1- 1S	AUTO SLEW PT V	26	BR
2	1A20	P1- 1T	AUTO SLEW PT VGND	26	BK
3	1A20	P1- 1U	AUTO SLEW PT OUT	26	R
4	1A20	P1- 1V	AUTO SLEW PT OUTRN	26	O
5	1A17	P2- 27	SV3F HI	24	Y
6	1A17	P2- 28	SV3 LOW	24	G

Front Panel Assembly Wire List
Table 4-16 (cont)

FROM PIN	TO COMPONENT-	PIN	SIGNAL NAME	AWG	COLOR
1	TB3				
7	1A17	P2- 76	SV6F + SV8F HI	24	BR
7	1	TB3- 11	SV6F + SV8F HI	24	GY
8	1A17	P2- 67	SV6 + SV8 LOW	24	BK
8	1	TB3- 12	SV6 + SV8 LOW	24	W
9	1A17	P2- 32	SV4F HI	24	V
10	1A17	P2- 31	SV4 LOW	24	BL
11	1	TB3- 7	SV6F + SV8F HI	24	GY
12	1	TB3- 8	SV6 + SV8 LOW	24	W
13			SPARE		
14			SPARE		
15			SPARE		
16			SPARE		
1	TB4				
1	1A20	P1- *5A	PT C.V. (RED)	22	R
2	1A20	P1- *6A	PT C.V. (BLK)	22	BK
3	1A20	P1- 1K	PT INLET NOZZLE	22	W -BK-O
4	1A20	P1- 2K	PT NOZZLE GND	22	W -BK-R
5	1A20	P1- 3K	PT EXHAUST NOZZLE	22	BK

Front Panel Assembly Wire List
Table 4-16 (cont)

FROM PIN	TO COMPONENT- PIN		SIGNAL NAME	AWG	COLOR
	1 TB5				
1	1	TB5- 4	BAT PACK GND	22	W -O -V
2	1	F1- 1	-15VDC BAT	22	W -O -G
3	1	F2- 1	+15VDC BAT	22	W -G -BL
4	1A20	P1- 2Y	BAT PACK GND	22	W -G -BL
4	1	TB5- 1	BAT PACK GND	22	W -O -V
5	1A17	P2- 75	SV9F HI	24	BR
6	1A17	P2- 71	SV9 LOW	24	BK
	1A14 P1				
1	1	S10A- 8	PT-CD0-DB3	24	R
2	1	S10A- 2	PT-CD0-DB1	24	O
3	1	S10B- 8	PT-CD1-DB3	24	Y
4	1	S10B- 2	PT-CD1-DB1	24	G
5	1	S10C- 8	PT-CD2-DB3	24	BL
6	1	S10C- 2	PT-CD2-DB1	24	V
7	1	S10D- 8	PT-CD3-DB3	24	W -O
8	1	S10D- 2	PT-CD3-DB1	24	GY
9	1	S10E- 8	PT-CD4-DB3	24	W
10	1	S10E- 2	PT-CD4-DB1	24	W -BK
11	1	S10F- 8	PT-CD5-DB3	24	W -BR
12	1	S10F- 2	PT-CD5-DB1	24	W -R

Front Panel Assembly Wire List
Table 4-16 (cont)

FROM PIN	TO COMPONENT- PIN		SIGNAL NAME	AWG	COLOR
	1A14	P1			
13		1 S10F-0Y	PT-CD COMMON	22	BR
15		1 S11A- 8	PT-RD0-DB3	24	W -BK-V
16		1 S11A- 2	PT-RD0-DB1	24	W -G
17		1 S11B- 8	PT-RD1-DB3	24	W -O -V
18		1 S11B- 2	PT-RD1-DB1	24	W -G -BL
19		1 S11C- 8	PT-RD2-DB3	24	W -G -V
20		1 S11C- 2	PT-RD2-DB1	24	W -BL-V
21		1 S10A- 4	PT-CD0-DB2	24	W -BL
22		1 S10A- 1	PT-CD0-DB0	24	W -V
23		1 S10B- 4	PT-CD1-DB2	24	W -BK-BR
24		1 S10B- 1	PT-CD1-DB0	24	W -BK-R
25		1 S10C- 4	PT-CD2-DB2	24	W -BK-O
26		1 S10C- 1	PT-CD2-DB0	24	W -BK-G
27		1 S10D- 4	PT-CD3-DB2	24	W -BK-BL
28		1 S10D- 1	PT-CD3-DB0	24	W -BR-V
29		1 S10E- 4	PT-CD4-DB2	24	W -BR-R
30		1 S10E- 1	PT-CD4-DB0	24	W -BR-O
31		1 S10F- 4	PT-CD5-DB2	24	W -BR-G
32		1 S10F- 1	PT-CD5-DB0	24	W -BR-BL
34		1 S11A-0Y	PT-RD COMMON	22	BK

Front Panel Assembly Wire List
Table 4-16 (cont)

FROM PIN	TO COMPONENT- PIN		SIGNAL NAME	AWG	COLOR
	1A14 P1				
35	1	S11A- 4	PT-RD0-DB2	24	W -R -O
36	1	S11A- 1	PT-RD0-DB0	24	W -R -G
37	1	S11B- 4	PT-RD1-DB2	24	W -R -BL
38	1	S11B- 1	PT-RD1-DB0	24	W -R -V
39	1	S11C- 4	PT-RD2-DB2	24	W -O -G
40	1	S11C- 1	PT-RD2-DB0	24	W -O -BL
	1A14 P3				
1	1	S9A- 8	PS-RD1-DB3	24	R
2	1	S9A- 2	PS-RD1-DB1	24	O
3	1	S9B- 8	PS-RD2-DB3	24	Y
4	1	S9B- 2	PS-RD2-DB1	24	G
5	1	S9C- 8	PS-RD3-DB3	24	BL
6	1	S9C- 2	PS-RD3-DB1	24	V
7	1	S9D- 8	PS-RD4-DB3	24	GY
8	1	S9D- 2	PS-RD4-DB1	24	W
9	1	S9D-0Y	PS-RD COMMON	22	BR
11	1	S8A- 8	PS-CD0-DB3	24	W -BR
12	1	S8A- 2	PS-CD0-DB1	24	W -R
13	1	S8B- 8	PS-CD1-DB3	24	W -O
14	1	S8B- 2	PS-CD1-DB1	24	W -G

Front Panel Assembly Wire List
Table 4-16 (cont)

FROM PIN	TO COMPONENT- PIN		SIGNAL NAME	AWG	COLOR
	1A14	P3			
15		1	S8C- 8 PS-CD2-DB3	24	W -BL
16		1	S8C- 2 PS-CD2-DB1	24	W -V
17		1	S8D- 8 PS-CD3-DB3	24	W -BK-BR
18		1	S8D- 2 PS-CD3-DB1	24	W -BK-R
19		1	S8E- 8 PS-CD4-DB3	24	W -BK-O
20		1	S8E- 2 PS-CD4-DB1	24	W -BK-G
21		1	S8F- 8 PS-CD5-DB3	24	W -BK-BL
22		1	S8F- 2 PS-CD5-DB1	24	W -BK-V
23		1	S9A- 4 PS-RD1-DB2	24	W -BR-R
24		1	S9A- 1 PS-RD1-DB0	24	W -BR-O
25		1	S9B- 4 PS-RD2-DB2	24	W -BR-G
26		1	S9B- 1 PS-RD2-DB0	24	W -BR-BL
27		1	S9C- 4 PS-RD3-DB2	24	W -BR-V
28		1	S9C- 1 PS-RD3-DB0	24	W -R -O
29		1	S9D- 4 PS-RD4-DB2	24	W -R -G
30		1	S9D- 1 PS-RD4-DB0	24	W -R -BL
32		1	S8A-0Y PS-CD COMMON	22	BK
33		1	S8A- 4 PS-CD0-DB2	24	W -O -G
34		1	S8A- 1 PS-CD0-DB0	24	W -O -BL
35		1	S8B- 4 PS-CD1-DB2	24	W -BK

Front Panel Assembly Wire List
Table 4-16 (cont)

FROM PIN	TO COMPONENT- PIN		SIGNAL NAME	AWG	COLOR
	1A14 P3				
36	1	S8B- 1	PS-CD1-DB0	24	W -R -V
37	1	S8C- 4	PS-CD2-DB2	24	W -O -V
38	1	S8C- 1	PS-CD2-DB0	24	W -G -BL
39	1	S8D- 4	PS-CD3-DB2	24	W -G -V
40	1	S8D- 1	PS-CD3-DB0	24	W -BL-V
41	1	S8E- 4	PS-CD4-DB2	24	G
42	1	S8E- 1	PS-CD4-DB0	24	Y
43	1	S8F- 4	PS-CD5-DB2	24	O
44	1	S8F- 1	PS-CD5-DB0	24	R
	1A14 P4				
1	1A20	P1- 4G	L=SYS FAIL	24	V
2	1A20	P1- 5L	TS2-1 (FP)	26	W -BK-O
3	1A20	P1- 5J	TS2-0 (FP)	26	W -BK-BR
4	1A20	P1- 5Y	TS2-3 (FP)	26	W -BR-R
5	1A17	P2- 8	+5 FP	22	W -BR-V
6	1	S1- 1	SIGNAL COMMON	22	BK
7	1A20	P1- 6C	CADL BKO-LN1 RTN	26	W -O -V
8	1A20	P1- 6S	CADL BK1-LN3 RTN	26	BK
9	1A20	P1- 6G	CADL BK1 LN2 RTN	26	Y
10	1A20	P1- 6Z	CADL BKO-LN2 RTN	26	W -BK

Front Panel Assembly Wire List
Table 4-16 (cont)

FROM PIN	TO COMPONENT- PIN	SIGNAL NAME	AWG	COLOR
	1A14 P4			
11	1A20 P1- 6B	CADL BKO-LNO RTN	24	W -O -G
12	1A20 P1- 6U	TS2-2 RTN	26	W -BK-V
13	1A20 P1- 5U	TS2-2 (FP)	26	W -BK-BL
14	1A20 P1- 4D	LOX	24	GY
15	1A20 P1- 5D	CADL BKO-LN5	26	W -G -BL
16	1A20 P1- 6D	CADL BKO LN5 RTN	26	W -G -V
17	1A20 P1- *6B	CADL BKO-LN3 RTN	26	W -BR
18	1A20 P1- 6H	CADL BK1 LN6 RTN	26	BL
19	1A20 P1- 6F	CADL BK1 LN1 RTN	26	R
20	1A20 P1- 6K	CADL BK1 LNO RTN	26	GY
21	1A17 P2- 15	+5 RET FP	22	BR
22	1 S4- 2	M4L LIGHT	24	Y
23	1 S2- 2	M2L LIGHT	24	BR
24	1 S7- 1	ASRL	24	G
25	1 S6- 1	ALRL	24	W -O -BL
26		N/C		
27	1 S3- 2	L=M3 LIGHT	24	R
28	1 S1- 2	M1L LIGHT	24	GY
29	1 S8H-OVC	PSDP3	24	V
30	1 S10G-OVC	PTDP1	24	W -BK-R

Front Panel Assembly Wire List
Table 4-16 (cont)

FROM PIN	TO COMPONENT- PIN		SIGNAL NAME	AWG	COLOR
	1A14	P4			
31		1	S8G-OVC	PSDP1	24	W -R
32		1	S10H-OVC	PTDP3	24	W -BK-G
33	1A17	P2- 10	+5 FP	22	W -R
34	1A20	P1- 5E	CADL BKO-LN4	26	W -BL-V
35	1A20	P1- 5C	CADLBKO-LN1	26	W -O -BL
36	1A20	P1- 5S	CADL BK1-LN3	26	R
37	1A20	P1- 5G	CADL BK1-LN2	26	O
38	1A20	P1- 5Z	CADL BKO-LN2	26	W
39	1A20	P1- 5B	CADL BKO-LNO	26	W -R -V
40	1A20	P1- 3T	INPUT DATA BUS 02	24	W -BK-BR
41	1A20	P1- 4A	INPUT DATA BUS 00	24	W -BK-O
42	1A20	P1- 4U	INPUT DATA BUS 01	24	W -BK-G
43	1A20	P1- 3W	INPUT DATA BUS 03	24	W -BK-R
44	1A17	P2- 16	FP MUX LIGHT COM	22	BR
45	1A20	P1- *5B	CADL BKO-LN3	26	W -R
46	1A20	P1- 5H	CADL BK1-LN6	26	G
47	1A20	P1- 5F	CADL BK1-LN1	26	BR
48	1A20	P1- 5K	CADL BK1-LNO	26	V
49	1A17	P2- 14	+5 RET FP	22	R
50		1	S18- 1	DQCLL	24	W -BK-G

Front Panel Assembly Wire List
Table 4-16 (cont)

FROM PIN	TO COMPONENT- PIN		SIGNAL NAME	AWG	COLOR
	1A14 P4				
51	1	S19- 1	DSSLL	24	W -BK-V
52	1	S14- 2	MSRL	24	W -R
53	1	S12- 2	ATEL	24	GY
54	1	S13- 2	PANL	24	W -BK
55	1	S17- 2	SMCL	24	W -BK-BR
56	1	S20- 1	MSL	24	W -BR-O
	1A14 P5				
1	1	S8H-0G	PS DP+5	24	BR
3	1A14	P5- 20	DI NC	24	W -BL
4	1	S6- 6	ALR NO	24	W -R -V
5	1	S6- 5	ALR NC	24	W -O -G
6	1	S7- 5	ASR NC	24	V
7	1	S4- 3	M4	24	G
8	1A20	P1- 6Y	TS2-3 RTN	26	W -BR-O
9	1A20	P1- 6L	TS2-1 RTN	26	W -BK-G
10	1A20	P1- 6J	TS2-0 RTN	26	W -BK-R
11	1A20	P1- 6E	CADL BKO LN4 RTN	26	BK
12	1A20	P1- 6V	INPUT DATA NBL RTN	26	W -V
13	1	S3- 3	L SET M3	26	O
14	1	S1- 3	M1	24	Y

Front Panel Assembly Wire List
Table 4-16 (cont)

FROM PIN	TO COMPONENT- PIN	SIGNAL NAME	AWG	COLOR
	1A14 P5			
15	1 S2- 3	M2	24	BK
16		N/C		
17	1 S20- 5	M5 NC	24	W -BR-G
18	1A20 P1- 6T	INPUT ID STROBERTN	26	W -G
19	1A20 P1- 1B	SET MSR RTN	26	W -BL
20	1A20 P1- 1A	SET ATE RTN	26	W -R
20	1A14 P5- 3	DI NC	24	W -BL
21	1 S3- 1	M3 RTN	26	W
22		N/C		
23	1A20 P1- 2A	L SET ATE	26	W -G
24	1 S12- 3	ATE	24	W
25	1 S14- 3	MSR	24	W -O
26	1A20 P1- 2B	L SET MSR	26	W -O
27		N/C		
28	1 S10H-0G	PT DP+5	24	W -O
29	1 S19- 6	DSSL NO	24	W -R
30	1 S19- 5	DSSL NC	24	W -BR-R
31	1 S18- 6	DQCL NO	24	BK
32	1 S7- 6	ASR NO	24	BL
33	1 S18- 5	DQCL NC	24	W -BK-BL
34	1A20 P1- 4K	X REG BIT 0 (FP)	24	W -BR-G

Front Panel Assembly Wire List
Table 4-16 (cont)

FROM PIN	TO COMPONENT- PIN	SIGNAL NAME	AWG	COLOR
	1A14 P5			
35	1A20 P1- 4S	X REG BIT 1	24	W -BR-V
36	1A20 P1- 3U	X REG BIT 2	24	W -BK-BL
37	1A20 P1- 4V	X REG BIT 3	24	W -R -O
38	1A20 P1- 5V	INPUT DATA NBL	26	W -BL
39		N/C		
40	1 S20- 6	M5 NO	24	W -BK-BR
41	1 S5- 2	CE	24	W -BL-V
42	1 S13- 3	PAN	24	W -BR
43	1A20 P1- 4E	H=SRC	24	G
44	1 S17- 1	SMC	24	W -BK-R
45	1A20 P1- 3Y	X REG BIT 07	24	W -BK-Y
46	1A20 P1- *3B	X REG BIT 06	24	W -BR-R
47	1A20 P1- *4A	X REG BIT 5	24	W -R -BL
48	1A20 P1- 4X	X REG BIT 4	24	W -R -G
49	1A20 P1- 5T	INPUT I.D. STROBE	26	W -O
50		N/C		
51		N/C		
52		N/C		
53		N/C		
54		N/C		

FROM PIN	TO COMPONENT- PIN		SIGNAL NAME	AWG	COLOR
	1A17 P1				
	1A17	P1- F	VOLTAGE SELECT	22	Y
A	1	B1- 4	FAN COM	26	O
B	1	SS1- 1	SHLD	24	BK
C			N/C		
D	1	B1- 5	FAN HI	26	R
E	1	FL1- 1	NEUTRAL	22	BK
F	1A17	P1-	VOLTAGE SELECT	22	Y
H	1	B1- 1	FAN LO	26	W
J	1	FL2- 1	HOT PWR SW	22	W
K			N/C		
L	1	SS4- 1	SHLD	24	BK
M	1	S16- 2	HOT PWR SW	22	BK
N			N/C		
P	1	S16- 5	PWR SW	22	W
R	1	SS3- 1	SHLD	24	BK

Front Panel Assembly Wire List
Table 4-16 (cont)

FROM PIN	TO COMPONENT- PIN	SIGNAL NAME	AWG	COLOR
1A17 P2				
1	1A18 P1- B	+45 V PS	24	W -R -V
2	1A19 P1- B	+45 V PT	24	R
3	1 A15- 14	+181V	24	O
4	1A20 P1- 1N	+5VDC	22	W -R -G
5	1A20 P1- 5N	+5VDC	22	W -O -BL
7	1A20 P1- 2N	+5VDC	22	W -R -BL
8	1A14 P4- 5	+5 FP	22	W -BR-V
10	1A14 P4- 33	+5 FP	22	W -R
11	1A20 P1- 1P	+5VDC GND	22	W -BK-BL
12	1A20 P1- 5P	+5VDC GND	22	W -G -BL
13	1A20 P1- 6P	+5VDC GND	22	W -G -V
14	1A14 P4- 49	+5 RET FP	22	R
15	1A14 P4- 21	+5 RET FP	22	BR
16	1A14 P4- 44	FP MUX LIGHT COM	22	BR
17	1 S1- 4	LAMP POWER +26 REG	22	W -BR
18	1A18 P1- C	+28 PS	22	W -O -G
20	1A19 P1- C	+28 PT	22	O
21	1A20 P1- 4B	L=SV1 CONTROL	24	W -BR-O
22	1 TB1- 6	SV1 LOW	24	BK
23	1 TB1- 5	SV1F HI	24	BR

Front Panel Assembly Wire List
Table 4-16 (cont)

FROM PIN	TO COMPONENT- PIN		SIGNAL NAME	AWG	COLOR
	1A17	P2			
24	1A20	P1- 4F	L=SV2 CONTROL	24	W -O
25	1	TB1- 10	SV2 LOW	24	R
26	1	TB1- 9	SV2F HI	24	O
27	1	TB3- 5	SV3F HI	24	Y
28	1	TB3- 6	SV3 LOW	24	G
29	1A20	P1- 4J	L=SV3 CONTROL	24	W -G
30	1A20	P1- 3S	L=SV4 CONTROL	24	W -V
31	1	TB3- 10	SV4 LOW	24	BL
32	1	TB3- 9	SV4F HI	24	V
33	1A20	P1- 4L	L=SV5+SV7 CONTROL	24	W -BR-BL
34	1	TB1- 7	SV5F +SV7F HI	24	GY
35	1	TB1- 8	SV5 + SV7 LOW	24	W
36	1A20	P1- 2P	+5VDC GND	22	W -R -V
37	1A18	P1- F	+15 PS SENSOR	24	BK
38	1A19	P1- F	+15 PT SENSOR	22	Y
39	1A20	P1- 3V	+15VDC	22	W -BK-R
40	1A19	P1- E	# 1 PT COM	24	G
41	1A19	P1- D	# 2 PT COM	24	BL
42	1A19	P1- A	# 3 PT COM	24	V
43	1A19	P1- L	CHASSIS PT COM	24	GY

Front Panel Assembly Wire List
Table 4-16 (cont)

FROM PIN	TO COMPONENT- PIN		SIGNAL NAME	AWG	COLOR
	1A17 P2				
44	1A18	P1- E	#1 PS COM	24	W -O -V
45	1A18	P1- D	#2 PS COM	24	W -G -BL
46	1A18	P1- A	#3 PS COM	24	W -G -V
47	1A18	P1- L	CHASSIS COM DS	24	W -BL-V
48	1A18	P1- H	-15 PS SENSOR	24	BR
49	1A19	P1- H	-15 PT SENSOR	22	W
50	1A20	P1- 4T	-15VDC	22	W -BK-O
51	1A20	P1- *4B	-15VDC	22	W -BK-G
52	1A20	P1- *3C	-15VDC	22	W -BK-BL
53	1A20	P1- 4Y	+15VDC	22	W -BK-V
54	1A20	P1- 3Z	+15VDC	22	W -BR-R
55	1A20	P1- 1F	+15V BAT DISCHARGE	22	W -BK-BR
56	1A20	P1- 1G	-15V BAT DISCHARGE	22	W -BK-R
57			N/C		
58	1	S16- 1	COM	22	W -BK
59			N/C		
60			N/C		
62			N/C		
63	1A20	P1- 1X	+BAT CHARGE	24	BR
64	1A20	P1- 1Y	BAT CHARGE GND	24	BK

Front Panel Assembly Wire List
Table 4-16 (cont)

FROM PIN	TO COMPONENT- PIN		SIGNAL NAME	AWG	COLOR
	1A17 P2				
65	1A20	P1- 1Z	-BAT CHARGE	24	R
66	1A20	P1- 3A	-28VDC	22	W -BR-R
67	1	TB3- 8	SV6 + SV8 LOW	24	BK
70	1A20	P1- 3B	+15VDC FOR C.V.	22	BR
71	1	TB5- 6	SV9 LOW	24	BK
72	1A19	P1- J	+5 PT SENS	24	W -BK
73	1A20	P1- 3J	L=SV6+SV8 CONTROL	24	W -BL
74	1A20	P1- 3C	-15VDC FOR C.V.	22	O
75	1	TB5- 5	SV9F HI	24	BR
76	1	TB3- 7	SV6F + SV8F HI	24	BR
77	1A20	P1- 3H	L=SV9 CONTROL	24	W -G
78	1A18	P1- J	+5 PS SENS	24	BR
79	1A20	P1- 6N	+5VDC	22	V
80	1A20	P1- 6A	21V RMS 400 HZ REN	24	W -R -BL
82	1A20	P1- 5A	21V RMS 400 HZ	24	W -BR-G

Front Panel Assembly Wire List
Table 4-16 (cont)

FROM PIN	TO COMPONENT- PIN		SIGNAL NAME	AWG	COLOR
	1A18 P1				
A	1A17	P2- 46	#3 PS COM	24	W -G -V
B	1A17	P2- 1	+45 V PS	24	W -R -V
C	1A17	P2- 18	+28 PS	22	W -O -G
D	1A17	P2- 45	#2 PS COM	24	W -G -BL
E	1A17	P2- 44	#1 PS COM	24	W -O -V
F	1A17	P2- 37	+15 PS SENSOR	24	BK
H	1A17	P2- 48	-15 PS SENSOR	24	BR
J	1A17	P2- 78	+5 PS SENS	24	BR
K	1A18	P1- N	+15 SW	24	W -BR
L	1A17	P2- 47	CHASSIS COM DS	24	W -BL-V
M			N/C		
N	1A18	P1- K	+15 SW	24	W -BR
P	1A19	P1- N	+15 SW	24	W -BR
R			N/C		
S			N/C		
T			N/C		
U	1A20	P1- *1B	PS SQUARE OUTPUT	24	BR
V	1	SS9- 1	PS SQ OUTPUT SHD	24	BK
W			N/C		
X			N/C		

Front Panel Assembly Wire List
Table 4-16 (cont)

FROM PIN	TO COMPONENT-	PIN	SIGNAL NAME	AWG	COLOR
1A18 P1					
Y	1A20	P1- 3X	COM-CSP	24	W -O
Z	1A19	P1- *B	CSP	24	W -R
*A	1A20	P1- 4H	PS SENSOR 2 HOT	24	W -BK
*B			N/C		
*C	1	SS5- 1	PS SINE SHIELD	24	BK
*D	1A20	P1- *5C	PS SINE OUTPUT	24	W
1A19 P1					
A	1A17	P2- 42	# 3 PT COM	24	V
B	1A17	P2- 2	+45 V PT	24	R
C	1A17	P2- 20	+28 PT	22	O
D	1A17	P2- 41	# 2 PT COM	24	BL
E	1A17	P2- 40	# 1 PT COM	24	G
F	1A17	P2- 38	+15 PT SENSOR	22	Y
H	1A17	P2- 49	-15 PT SENSOR	22	W
J	1A17	P2- 72	+5 PT SENS	24	W -BK
K			N/C		
L	1A17	P2- 43	CHASSIS PT COM	24	GY
M			N/C		
N	1A18	P1- P	+15 SW	24	W -BR
P	1A20	P1- 4C	H=EQ FINE HEAT ON	24	GY

Front Panel Assembly Wire List
Table 4-16 (cont)

FROM PIN	TO COMPONENT- PIN	SIGNAL NAME	AWG	COLOR
	1A19 P1			
R		N/C		
S		N/C		
T		N/C		
U	1A20 P1- *1C	PT SQUARE OUTPUT	24	W
V	1 SS7- 1	PT SQ OUTPUT SHD	24	BK
W		N/C		
X		N/C		
Y		N/C		
Z	1A20 P1- *3A	CSP	24	W -R
*A	1A20 P1- 4Z	PT SENSOR 2 HOT	24	W -BK
*B	1A18 P1- Z	CSP	24	W -R
*C	1 SS11- 1	PT SINE SHIELD	24	BK
*D	1A20 P1- 5W	PT SINE OUTPUT	24	BR

FROM PIN	TO COMPONENT- PIN			SIGNAL NAME	AWG	COLOR
	1A20	P1				
1A	1A14	P5-	20	SET ATE RTN	26	W -R
1B	1A14	P5-	19	SET MSR RTN	26	W -BL
1C	1	S3-	1	SET M3 RTN	26	W -V
1D				N/C		
1E				N/C		
1F	1A17	P2-	55	+15V BAT DISCHARGE	22	W -BK-BR
1G	1A17	P2-	56	-15V BAT DISCHARGE	22	W -BK-R
1H				N/C		
1J				N/C		
1K	1	TB4-	3	PT INLET NOZZLE	22	W -BK-O
1L	1	TB2-	3	PS INLET NOZZLE	22	W -BK-G
1M				N/C		
1N	1A17	P2-	4	+5VDC	22	W -R -G
1P	1A17	P2-	11	+5VDC GND	22	W -BK-BL
1R				N/C		
1S	1	TB3-	1	AUTO SLEW PT V	26	BR
1T	1	TB3-	2	AUTO SLEW PT VGND	26	BK
1U	1	TB3-	3	AUTO SLEW PT OUT	26	R
1V	1	TB3-	4	AUTO SLEW PT OUTRN	26	O
1W	1	L1-	1	AUTO VENT LT HI	24	BR

Front Panel Assembly Wire List
Table 4-16 (cont)

FROM PIN	TO COMPONENT- PIN		SIGNAL NAME	AWG	COLOR
	1A20 P1				
1X	1A17	P2- 63	+BAT CHARGE	24	BR
1Y	1A17	P2- 64	BAT CHARGE GND	24	BK
1Z	1A17	P2- 65	-BAT CHARGE	24	R
*1A	1	L1- 2	AUTO VENT LT LOW	24	O
*1B	1A18	P1- U	PS SQUARE OUTPUT	24	BR
*1C	1A19	P1- U	PT SQUARE OUTPUT	24	W
2A	1A14	P5- 23	L SET ATE	26	W -G
2B	1A14	P5- 26	L SET MSR	26	W -O
2C	1	S3- 3	L SET M3	26	BR
2D	1	S15- 1NO	DI NO	24	W -BL
2E	1	S15- 2NC	DI NC	24	W -V
2F			N/C		
2G			N/C		
2H			N/C		
2J			N/C		
2K	1	TB4- 4	PT NOZZLE GND	22	W -BK-R
2L	1	TB2- 4	PS NOZZLE GND	22	W -BK-BR
2M			N/C		
2N	1A17	P2- 7	+5VDC	22	W -R -BL
2P	1A17	P2- 36	+5VDC GND	22	W -R -V

Front Panel Assembly Wire List
Table 4-16 (cont)

FROM PIN	TO COMPONENT-	PIN	SIGNAL NAME	AWG	COLOR
1A20 P1					
2R			N/C		
2S	1	TB1- 1	AUTO SLEW PS V	24	W -BK-O
2T	1	TB1- 2	AUTO SLEW PS VGND	24	W -BK-G
2U	1	TB1- 3	AUTO SLEW PS OUT	24	W -BK-BL
2V	1	TB1- 4	AUTO SLEW PS OUTRN	24	W -BK-V
2W	1	L2- 1	BAT LOW LT HI	24	Y
2X	1	F1- 2	-15VDC BAT	22	W -O -BL
2Y	1	TB5- 4	BAT PACK GND	22	W -G -BL
2Z	1	F2- 2	+15VDC BAT	22	W -G -V
*2A	1	L2- 2	BAT LOW LT LOW	24	BL
*2B	1	SS10- 1	PS SQ OUTPUT SHD	24	BK
*2C	1	SS8- 1	PT SQ OUTPUT SHD	24	BK
3A	1A17	P2- 66	-28VDC	22	W -BR-R
3B	1A17	P2- 70	+15VDC FOR C.V.	22	BR
3C	1A17	P2- 74	-15VDC FOR C.V.	22	O
3D	1	S3- 2	L=M3 LIGHT	24	V
3E			N/C		
3F			N/C		
3G			N/C		
3H	1A17	P2- 77	L=SV9 CONTROL	24	W -G

Front Panel Assembly Wire List
Table 4-16 (cont)

FROM PIN	TO COMPONENT- PIN		SIGNAL NAME	AWG	COLOR
	1A20 P1				
3J	1A17	P2- 73	L=SV6+SV8 CONTROL	24	W -BL
3K	1	TB4- 5	PT EXHAUST NOZZLE	22	BK
3L	1	TB2- 5	PS EXHAUST NOZZLE	22	BR
3M			N/C		
3N			N/C		
3P			N/C		
3R			N/C		
3S	1A17	P2- 30	L=SV4 CONTROL	24	W -V
3T	1A14	P4- 40	INPUT DATA BUS 02	24	W -BK-BR
3U	1A14	P5- 36	X REG BIT 2	24	W -BK-BL
3V	1A17	P2- 39	+15VDC	22	W -BK-R
3W	1A14	P4- 43	INPUT DATA BUS 03	24	W -BK-R
3X	1A18	P1- Y	COM-CSP	24	W -O
3Y	1A14	P5- 45	X REG BIT 07	24	W -BK-V
3Z	1A17	P2- 54	+15VDC	22	W -BR-R
*3A	1A19	P1- Z	CSP	24	W -R
*3B	1A14	P5- 46	X REG BIT 06	24	W -BR-R
*3C	1A17	P2- 52	-15VDC	22	W -BK-BL
4A	1A14	P4- 41	INPUT DATA BUS 00	24	W -BK-O
4B	1A17	P2- 21	L=SV1 CONTROL	24	W -BR-O

Front Panel Assembly Wire List
Table 4-16 (cont)

FROM PIN	TO COMPONENT- PIN		SIGNAL NAME	AWG	COLOR
	1A20 P1				
4C	1A19	P1- P	H=EQ FINE HEAT ON	24	GY
4D	1A14	P4- 14	LOX	24	GY
4E	1A14	P5- 43	H=SRC	24	G
4F	1A17	P2- 24	L=SV2 CONTROL	24	W -O
4G	1A14	P4- 1	L=SYS FAIL	24	V
4H	1A18	P1- *A	PS SENSOR 2 HOT	24	W -BK
4J	1A17	P2- 29	L=SV3 CONTROL	24	W -G
4K	1A14	P5- 34	X REG BIT 0 (FP)	24	W -BR-G
4L	1A17	P2- 33	L=SV5+SV7 CONTROL	24	W -BR-BL
4M			N/C		
4N			N/C		
4P			N/C		
4R			N/C		
4S	1A14	P5- 35	X REG BIT 1	24	W -BR-V
4T	1A17	P2- 50	-15VDC	22	W -BK-O
4U	1A14	P4- 42	INPUT DATA BUS 01	24	W -BK-G
4V	1A14	P5- 37	X REG BIT 3	24	W -R -O
4W	1	S15- 2	PS DYNAMIC LT	24	R
4X	1A14	P5- 48	X REG BIT 4	24	W -R -G
4Y	1A17	P2- 53	+15VDC	22	W -BK-V

Front Panel Assembly Wire List
Table 4-16 (cont)

FROM PIN	TO COMPONENT- PIN		SIGNAL NAME	AWG	COLOR
	1A20 P1				
4Z	1A19	P1- *A	PT SENSOR 2 HOT	24	W -BK
*4A	1A14	P5- 47	X REG BIT 5	24	W -R -BL
*4B	1A17	P2- 51	-15VDC	22	W -BK-G
*4C	1	S15- 1	PT DYNAMIC LT	24	W -R
5A	1A17	P2- 82	21V RMS 400 HZ	24	W -BR-G
5B	1A14	P4- 39	CADL BKO-LNO	26	W -R -V
5C	1A14	P4- 35	CADLBKO-LN1	26	W -O -BL
5D	1A14	P4- 15	CADL BKO-LN5	26	W -G -BL
5E	1A14	P4- 34	CADL BKO-LN4	26	W -BL-V
5F	1A14	P4- 47	CADL BK1-LN1	26	BR
5G	1A14	P4- 37	CADL BK1-LN2	26	O
5H	1A14	P4- 46	CADL BK1-LN6	26	G
5J	1A14	P4- 3	TS2-O (FP)	26	W -BK-BR
5K	1A14	P4- 48	CADL BK1-LNO	26	V
5L	1A14	P4- 2	TS2-1 (FP)	26	W -BK-O
5M			N/C		
5N	1A17	P2- 5	+5VDC	22	W -O -BL
5P	1A17	P2- 12	+5VDC GND	22	W -G -BL
5R			N/C		
5S	1A14	P4- 36	CADL BK1-LN3	26	R

FROM PIN	TO COMPONENT- PIN		SIGNAL NAME	AWG	COLOR
	1A20 P1				
5T	1A14	P5- 49	INPUT I.D. STROBE	26	W -O
5U	1A14	P4- 13	TS2-2 (FP)	26	W -BK-BL
5V	1A14	P5- 38	INPUT DATA NBL	26	W -BL
5W	1A19	P1- *D	PT SINE OUTPUT	24	BR
5X	1	TB2- 1	PS C.V. (RED)	22	R
5Y	1A14	P4- 4	TS2-3 (FP)	26	W -BR-R
5Z	1A14	P4- 38	CADL BKO-LN2	26	W
*5A	1	TB4- 1	PT C.V. (RED)	22	R
*5B	1A14	P4- 45	CADL BKO-LN3	26	W -R
*5C	1A18	P1- *D	PS SINE OUTPUT	24	W
6A	1A17	P2- 80	21V RMS 400 HZ REN	24	W -R -BL
6B	1A14	P4- 11	CADL BKO-LNO RTN	24	W -O -G
6C	1A14	P4- 7	CADL BKO-LN1 RTN	26	W -O -V
6D	1A14	P4- 16	CADL BKO LN5 RTN	26	W -G -V
6E	1A14	P5- 11	CADL BKO LN4 RTN	26	BK
6F	1A14	P4- 19	CADL BK1 LN1 RTN	26	R
6G	1A14	P4- 9	CADL BK1 LN2 RTN	26	Y
6H	1A14	P4- 18	CADL BK1 LN6 RTN	26	BL
6J	1A14	P5- 10	TS2-O RTN	26	W -BK-R
6K	1A14	P4- 20	CADL BK1 LNO RTN	26	GY

Front Panel Assembly Wire List
Table 4-16 (cont)

FROM PIN	TO COMPONENT- PIN		SIGNAL NAME	AWG	COLOR
	1A20 P1				
6L	1A14	P5- 9	TS2-1 RTN	26	W -BK-G
6M			N/C		
6N	1A17	P2- 79	+5VDC	22	V
6P	1A17	P2- 13	+5VDC GND	22	W -G -V
6R			N/C		
6S	1A14	P4- 8	CADL BK1-LN3 RTN	26	BK
6T	1A14	P5- 18	INPUT ID STROBERTN	26	W -G
6U	1A14	P4- 12	TS2-2 RTN	26	W -BK-V
6V	1A14	P5- 12	INPUT DATA NBL RTN	26	W -V
6W	1	SS12- 1	PT SINE SHIELD	24	BK
6X	1	TB2- 2	PS C.V. (BLK)	22	BK
6Y	1A14	P5- 8	TS2-3 RTN	26	W -BR-O
6Z	1A14	P4- 10	CADL BKO-LN2 RTN	26	W -BK
*6A	1	TB4- 2	PT C.V. (BLK)	22	BK
*6B	1A14	P4- 17	CADL BKO-LN3 RTN	26	W -BR
*6C	1	SS6- 1	PS SINE SHIELD	24	BK

WL4047693
REV B

OTES:
1. To provide a complete alphanumeric listing of all termination points, each wire appears twice. Both appearances are identical with the exception that the second appearance has the "FROM" and "TO" ends swapped.
2. An asterisk before the "PIN" designation indicates lower case letter(s).
3. An asterisk within "SIGNAL NAME" denotes logical "NOT."

Front Panel Assembly Wire List
Table 4-16 (cont)

Section 5. Adjustment and Calibration

1. General

The engineering bulletin (EB) for calibration of the ADT-222B, table 4-17, is provided in this section. Table 4-17 contains some procedures which are duplications of table 3-4 and other procedures which are only to be performed by Sperry Flight Systems. Since the EB is used by Sperry's factory and repair facilities, it is included here in its entirety for your information.

2. Calibration Procedures

Perform the procedures in table 4-17 only as directed by the troubleshooting procedures in section 4 of this chapter. Also, as stated in section 2 of this chapter, the accuracy of the ADT-222B is determined by the test equipment you use.

The procedure for setting the internal pressure regulators must not be performed unless a pressure regulator has failed and has been replaced. The pressure regulators are factory calibrated and do not need readjustment unless the ADT-222B is to operate in an environment higher than 6000 feet above mean sea level.

The procedure for calibrating the P_s and P_t sensors is not included in this manual. The sensors cannot be recalibrated without the use of Sperry's sensor calibration program on a Univac 1108 computer. The process involves programming of the PROM containing the sensor calibration constants. When a sensor is determined to be defective, it must be replaced along with its PROM, which are installed on card A6.

Over a period of time, aging may cause the characteristics of the sensors to shift slightly. This shift will be represented by a gradual drift in the pressure readings. The system control processor contains calibration switches which are used to compensate for sensor drift. User calibration of the ADT-222B is limited to the adjustment of these calibration switches. If sensor drift lies outside the range of the calibration switches, the sensor is defective, and both the sensor and its PROM must be replaced.

NOTICE

Procedures in table 4-17 are based on Sperry Engineering Bulletin EB4050262, Rev. B(R).

TABLE OF CONTENTS

	Page
INTRODUCTION	5
SPECIAL TOOLS, FIXTURES, AND TEST EQUIPMENT	6
1. Leak Test	8
2. Setting the Pressure Regulators	9
3. Sensor Calibration (Coarse)	10
4. Switch Description	11
5. Description of Automatic Sensor Recalibration (Fine)	15
6. Automatic Sensor Recalibration Ps/Pt	16
7. PS/PT Accuracy Test	21
8. Pressure Source Quality	34
9. Vacuum Source Quality	34
10. Vacuum Pump Shutdown	34
11. Pressure Overrange Tests	35
12. P_S Gain Switch Adjustment	35
13. P_T Gain Switch Adjustment	38
14. D/A Voltage Check	40
15. Selection of P_S/P_T Error Register Trim Resistor	40
16. Measure Mode Tests	41
17. Pressure Maintenance Tests	41
18. Dynamic Input Modulation	45

TABLE OF CONTENTS (cont)

	Page
19. Average Altitude Rate Accuracy	45
20. Average Airspeed Rate Accuracy	45
21. Q_C Transient Control	46
22. DSSL and DQCL Limits	46
23. Fixed Orifice Venting Test	46
24. Gain Switch Adjustment (Final)	47
25. Strip Chart Runs	51
26. Inspection of Strip Chart Runs	56
27. Flow Restriction Test	59
28. Typical Strip Chart Runs	59
29. Outline for EB Test of ADT-222B	95

INTRODUCTION

The tests described in this engineering bulletin (EB) are intended to insure that the ADT-222B will operate properly and pass the end item Integrated Test Specification (IT). These tests must be completed before the unit is submitted for end item test because the end item test alone is not sufficient to guarantee proper operation. Once this EB is completed, the P_S or P_T sensor assemblies (4026197-9XX), the scratch pad ECA's (1900312-901 and 4047699-901), the sensor memory ECA (1900308-901), the control and D/A ECA (4022594-901), the P_S innerloop ECA (4047707-901), the P_T innerloop ECA (4047705-901), the P_S pneumatic control valve (4034452-2), and the P_T pneumatic control valve (4034452-1), should not be changed. If the need arises to change one of the above assemblies, judgement should be used as to which portions of the EB could be affected. This judgement should be made based on an understanding of the tests involved in this EB as well as the tests involved in the test specification of the assembly in question. Noise, accuracy, inner loop gain, short term stability, outer loop gain, offset voltages, and drift rates should be considered. If this judgement cannot be made, then rerun the complete EB.

All assemblies are assumed tested and operating properly. The complete ADT-222B is further assumed to operate in Self Test, Measure and Control modes at least at P_S and P_T pressures of 28 inHg before this EB is started.

All the switches on the A6 card are assumed set to zero. Set PTNC, PTEC, PTIC, PSNC, PSEC, PSIC to multiplication factor of 1 (see Section 4). These switches control the electrical gain of the inner loop. If set too high for the requirements of a particular combination of control valve and sensor, the valve will oscillate at a frequency between 10 and 100 Hz. Throughout this EB, be aware of this possibility and lower the switch gain settings if any oscillation of the valve is heard or detected through monitoring of TP4 (SA) on A12 and A13.

The final strip chart recordings are to be labeled as designated in this EB and kept with the applicable ADT-222B.

The tests in this EB should be done in the sequence in which they are described.

SPECIAL TOOLS, FIXTURES, AND TEST EQUIPMENT

The following equipment is required for test and calibration of the ADT-222B:

NOTE

Equivalent substitutes may be used for the items listed.

Manometer - Model 1025FX110, Schwien Engineering Inc, Pomona, CA

Digital Voltmeter - Model 3440A, Hewlett Packard, Sunnyvale, CA

Counter - Model 5245L, Hewlett Packard

Oscilloscope - Model 7633, Tektronix Ind, Beaverton, OR

Plug-in Module - Model 7A22, Tektronix

X10 Probe - Model P6105, Tektronix

Multimeter - Model 260, Simpson Electric Co, Division of American Gage and Machine Co, Elgin, IL

Functional Generator - Model 111, Wavetek Inc

Chart Recorder - Model 2400, Gould

Preamplifier (four required) - Model 13-4615-10, Gould

Accumulator Tank - Part No. 4022677, Sperry Flight Systems (60 in^3) (two)

Accumulator Tank - Part No.4050313-2, Sperry Flight Systems (200 in^3) (two)

ADT-222A Valve Test Tool - Part No. T322986, Sperry Flight Systems or Penwalt Digital Pressure Gage 66B-1B-0120.

Decade Resistance Box - Type 1432P, General Radio Co, West Concord, MA

Soldering Iron - Model WTCPN with 700 °F tip, Weller Division, Cooper Industries Inc, Cheraw, SC

Staking Compound - 7526F Glyptal (blue), General Electric Co, Insulating Materials Dept, Schenectady, NY

Isopropyl Alcohol - Commercial

Leak Detector Fluid - Four ounces, Leak-Tec Formula No. 372, American Gas and Chemical Co, New York, NY

Pressure Hose - 3/16 inch inside diameter, 24 inches long, commercial

Pressure Hose - 3/16 inch inside diameter, 12 inches long, commercial

Pressure Hose - 3/16 inch inside diameter, 6 ft ± .5 ft long, commercial

Select Resistors - (2500169)

1. LEAK TEST

A. Put the ADT-222B in the measure P_S/P_T inHg mode and vent the system to atmosphere by opening the shutoff valves. Cap off the P_S and P_T fittings with the caps that are hanging on the chains. A very small amount of vacuum grease may be used on the flaired surfaces of these caps to aid in making this connection leak tight. Push the panel control pushbutton and set the digit switches for:

P_S = 31.0000 inHg

P_T = 89.0000 inHg

P_S Rate = 40,000 ft/min

P_T Rate = 500 milli-inHg/sec

Turn on the disable Q_C Limit and the disable Subsonic Limit.

Operate the enter pushbutton and wait until the displays reach the commanded pressures. Push the measure button and wait at least 5 minutes for the air temperature in the internal volume tanks to stabilize. Be sure that both front panel manual valves are open. Take readings from the P_S and P_T displays 1 minute apart to determine the leak rate. This leak rate must be less than ±.020 inHg/minute. This leak test shall be conducted at P_S = 31 ± 1 inHg and P_T = 89 ± 1 inHg.

Put the ADT-222B back in control and command $P_S = P_T$ = 1.750 inHg. When both displays reach the commanded pressures, push the measure button and wait at least 5 minutes for temperature stabilization.

Take readings from the displays 1 minute apart to determine the leak rate. This leak rate must be less than ±.005 inHg/minute. This test shall be conducted at $P_S = P_T$ = 1.75 ± .5 inHg.

Put ADT-222B back in control mode and command $P_S = P_T = 32.0000$ inHg. When the displays reach the command pressures, wait 15 seconds for the digital integrator to settle out, remove the P_S/P_T caps and open the valves. (Note an E will appear in each display.) Cap off the V_S, V_T and P_{in} rear panel ports and connect a vacuum pump to the P_S and P_T fittings. As soon as the P_S or P_T display falls between .5 and 1.0 inHg shut the corresponding manual valve.

Command the P_S and P_T to a pressure above the displays. Press and hold ATE and simultaneously and momentarily press MEASURE to expand the display one digit while remaining in control. "AS" must replace the "E" in the displays. This is because the valve has been driven to full stroke (300 ma).

Wait at least 5 minutes before taking readings. Take readings from the P_S/P_T displays one minute apart. The tens of milli-inches Hg digit may change by 1 digit in a minute.

Return to Front Panel Control by pressing CONTROL and momentarily pressing MEASURE simultaneously. Set the P_S/P_T command switches to a pressure below the display. Operate ENTER. The "AS" should be removed from the display and replaced by "E" and then "AS" must reappear as the control valve drives to saturation in the opposite direction. Expand the display again. Take readings from the P_S/P_T displays one minute apart. The tens of milli-inches Hg digit may change by 1 digit in a minute.

These leak tests must be completed before any Schwien data is taken on the sensors.

2. SETTING OF THE PRESSURE REGULATORS

Unless noted, all tests in this EB are to be performed using two 50 liter/min vacuum pumps.

Tee into the P_1 inlet pressure at the P_S or P_T pneumatic manifold. Connect this tee to an absolute pressure measuring device such as the ADT-222A valve test tool, T322986. With the ADT-222B in panel control, the P_S/P_T pneumatic fittings closed, the vacuum pumps running, the inlet pressure turned on and regulated to 50 ± 5 psig, set the P_S valve inlet pressure (P_1) using the back panel gages to 6 psig and the P_T valve inlet pressure to 36 psig.

CAUTION

LARGE SUSTAINED OSCILLATION ON THE VALVE DRIVE GREATER THAN 5 VOLTS MAY DAMAGE THE CONTROL VALVE. LOWER INNER LOOP GAIN TO PREVENT THIS. SEE SECTION 26: SUMMING AMPLIFIER.

Go to control mode and command the ADT-222B to P_S = 20 Hg and P_T = 60 Hg. This positions the P_S and P_T control valves for maximum quiescent mass flow and allows for final adjustment of the P_S and P_T regulators. Adjust the P_S valve inlet pressure to 42 ± .5 inHg absolute and the P_T valve inlet pressure to 103 ± .5 inHg absolute. Remove the tee and reconnect the P_t lines.

If the valve test tool is used, a frequency counter HP5245L is required. Set this counter on 1000 period average and read the pressure from the valve test tool calibration chart.

Place glyptal on the lock screw threads, then tighten the lock screw on each regulator and seal with torque seal or similar material. Note that the gages will read approximately P_S = 6 psig and P_T = 36 psig.

3. SENSOR CALIBRATION (COARSE)

The procedure for coarse calibrating the P_S and P_t sensors is not included in this manual. The sensors cannot be recalibrated without the use of Sperry's sensor calibration program on a Univac 1108 computer. The process involves programming of the PROM containing the sensor calibration constants. When a sensor is determined to be defective, it must be replaced along with its PROM, which are installed on card A6.

4. DESCRIPTION OF SWITCH FUNCTIONS AND DISPLAY SYMBOLS

4.1 Switch Description

On the A6 memory ECA of the ADT-222B are four 8-bit switches (S1, S2, S3, and S4). When set to "1" = TRUE, the bits on these switches activate the different features. They are defined below:

Switch S1 Bit #	Function	Mnemonic	
1	P_S Calibration Bypass Mode	PSCBP	See Note 1
2	P_t Calibration Bypass Mode	PTCBP	
3	P_S Calibration Table Display Mode	PSCTA	
4	P_t Calibration Table Display Mode	PTCTA	
5	P_S Calibration Mode	PSCAL	
6	P_t Calibration Mode	PTCAL	
7	HDOT2		
8	HDOT1		

Switch S2 Bit #			
1	Bypass all limits	BPLIM	See Note 2
2	Padlock	PADL	
3,4,8	Unused		
5-7	P_S No contact G-function Multiplier	PSNC	

NOTES: 1. The calibration features (S1 bits 1 through 6) may only be activated one feature at a time. The ADT-222B should be placed in the P_S/P_t in Hg mode with the SSL/QCL lights on prior to operating these switches.

2. Switch S2 bit 2 is a hardware padlock on EAROM writing. Prior to calibration, this switch must be turned off (down) before S1 bit 5 or bit 6 is turned on. When calibration is complete, it must be turned on (up) after S1 bit 5 or bit 6 is turned off and "A" on display has disappeared.

Switch S3 Bit #	Function	Mneumonic
1	Unused	
2 - 4	P_S Inlet Contact G-function Multiplier	PSIC
5 - 7	P_S Exhaust Contact G-function Multiplier	P_SEC
8	P_T No Contact G-function Multiplier (MSB)	P_TNC
Switch S4 Bit #		
1 - 2	P_T No Contact G-function Multiplier (2 LSB's)	P_TNC
3 - 5	P_T Inlet Contact G-function Multiplier	P_TIC
6 - 8	P_T Exhaust Contact G-function Multiplier	P_TEC

Switches 3 and 4 contain six 3-bit G-function multipliers. When looking at the component side of the CCA with the switches at the top of the board, the most significant bit of each 3-bit word is the leftmost bit. The following table shows the 8 possible settings of each 3-bit word and the associated decimal multiplier value applied to the G-function voltage at TP2.

MSB		LSB	Multiplier
0	0	0	0.552
0	0	1	0.673
0	1	0	0.820
0	1	1	1.000
1	0	0	1.219
1	0	1	1.486
1	1	0	1.811
1	1	1	2.208

4.2 Display Symbols

Four display symbols are used to aid the calibration operator.

CSF
BAd.S
BAd.C
CE

Check sum fail (CSF) means that the sum of the contents of the Calibration EAROMS is incorrect. Both displays indicate , and the bad calibration data is bypassed. This fault can only be removed by recalibration. Operating the calibration bypass will temporarily remove the symbol from the displays.

Bad Sensor (BAd.S) means that the calibration point entry attempt exceeds the EAROM storage capacity of ± 250 milli-inches Hg. This display symbol will self destruct within 15 seconds. The bad calibration point will be ignored.

Bad Command (BAd.C) means that the true pressure entry on the command switches was below the previous entry. Since pressure points must be entered in increasing pressure, the display will indicate Bad Command. This display symbol will also self destruct within 15 seconds. The bad calibration point will be ignored.

Calibration Error (CE) indicates the lower and upper limit of the calibration range.

The Subsonic Altitude rate limits are invoked when the SSL/OCL lights are off. The commandable limits are controlled by switch S1 bits 7 and 8. See the table below:

HDOT2 S1-7	HDOT1 S1-8	Altitude Rate Command Limit ft/min
0	0	65,000
0	1	20,000
1	0	10,000
1	1	6,000

If these limits are exceeded, the ADT-222B will not accept the command and flashes the SSL light. Verify all four binary combinations. When finished, leave the switches in the zero position.

These HDOT limits are bypassed for the calibration bypass and calibration modes.

5. DESCRIPTION OF AUTOMATIC SENSOR RECALIBRATION (FINE)

5.1 Calibration Bypass Mode

When either of S1 switch bits 1 or 2 is true, the calibration data stored in the EAROMS is bypassed and the display pressure is based only on the calibration PROMS that contain sensor information obtained during dense data taking. An "A" will appear in the normally blank left-most display digit. This mode is used to optimally select calibration pressures in the field. The previous EAROM calibration is bypassed as well as the SSL/QCL limits.

5.2 Calibration Table Display Mode

When either S1 switch bit 3 or 4 is true, the previously stored calibration point pairs (true pressure, error) are continuously displayed. However, the exact operator entered true pressure points are not stored by the ADT-222B Processor.

In order to make efficient use of the EAROM storage the true pressure decimal number is quantized into a binary number that is within ±4 milli-inches Hg of the actual true pressure. The error is quantized to a resolution of ±.5 milli-inch Hg and it is this new point pair (quantized true pressure, and quantized error) that is stored in the EAROMS and displayed when the calibration table display mode is selected. This does not cause a loss of accuracy. The calibration display table sequence is:

1) Display lowest true pressure for three seconds.

2) Display sensor error stored at above true pressure for three seconds.

3) Repeat.

This will continue on the P_S or the P_t display until the True Pressure Button is pushed. Then the sequence will be repeated for the next higher pressure point. This will continue until all calibration points have been displayed. After the last calibration point has been displayed and the true pressure button is pushed again, the display will return to the lowest pressure point and start again. When the switch is returned to zero, this mode is terminated. This feature allows the calibration operator to keep records of the required calibration.

If the Sensor Calibration Slope exceeds 25 milli-inches Hg per inHg, new Sensor PROMS must be blown. Calculate the maximum sensor calibration slope using adjacent points from the table display or from the calibration bypassed plots in Figure 3 or 4 of this EB.

6. AUTOMATIC SENSOR RECALIBRATION P_S/P_T*

Move the ADT-222B next to the Schwien manometer. Leave power on the ADT-222B for at least 8 hours. Power must be uninterrupted for at least 1 hour before taking any accuracy data. The unit must be in the Ps/Pt inHg measure mode with the manual valves open and caps removed so that the measuring system is vented to atmosphere during the entire temperature stabilization period. The total power interruption time must not exceed 1 minutes.

After temperature stabilization put the Schwien on the proper gas and connect the Schwien to the Ps or Pt fitting. Level the ADT-222B within ±2 degrees and set the height of the center line of the ADT-222B equal to the height of the center line of the Schwien within ±1 inch.

Cycle the Schwien and the ADT-222B three times over the following ranges:

$.5 \leq P_S \leq 40$ inHg for P_S

$.5 \leq P_T \leq 100$ inHg for P_T

CAUTION

THIS DOCUMENT ASSUMES THAT THE OPERATOR IS FAMILIAR WITH CORRECT OPERATION OF HIS PRECISION MANOMETER (SCHWIEN OR EQUIVALENT).

NOTE: Switch S2 bit 2 is a hardware padlock on EAROM writing. Prior to calibration, this switch must be turned off (down) before S1 bit 5 or bit 6 is turned on. When calibration is complete, it must be turned on (up) after S1 bit 5 or bit 6 is turned off and "A" on display has disappeared.

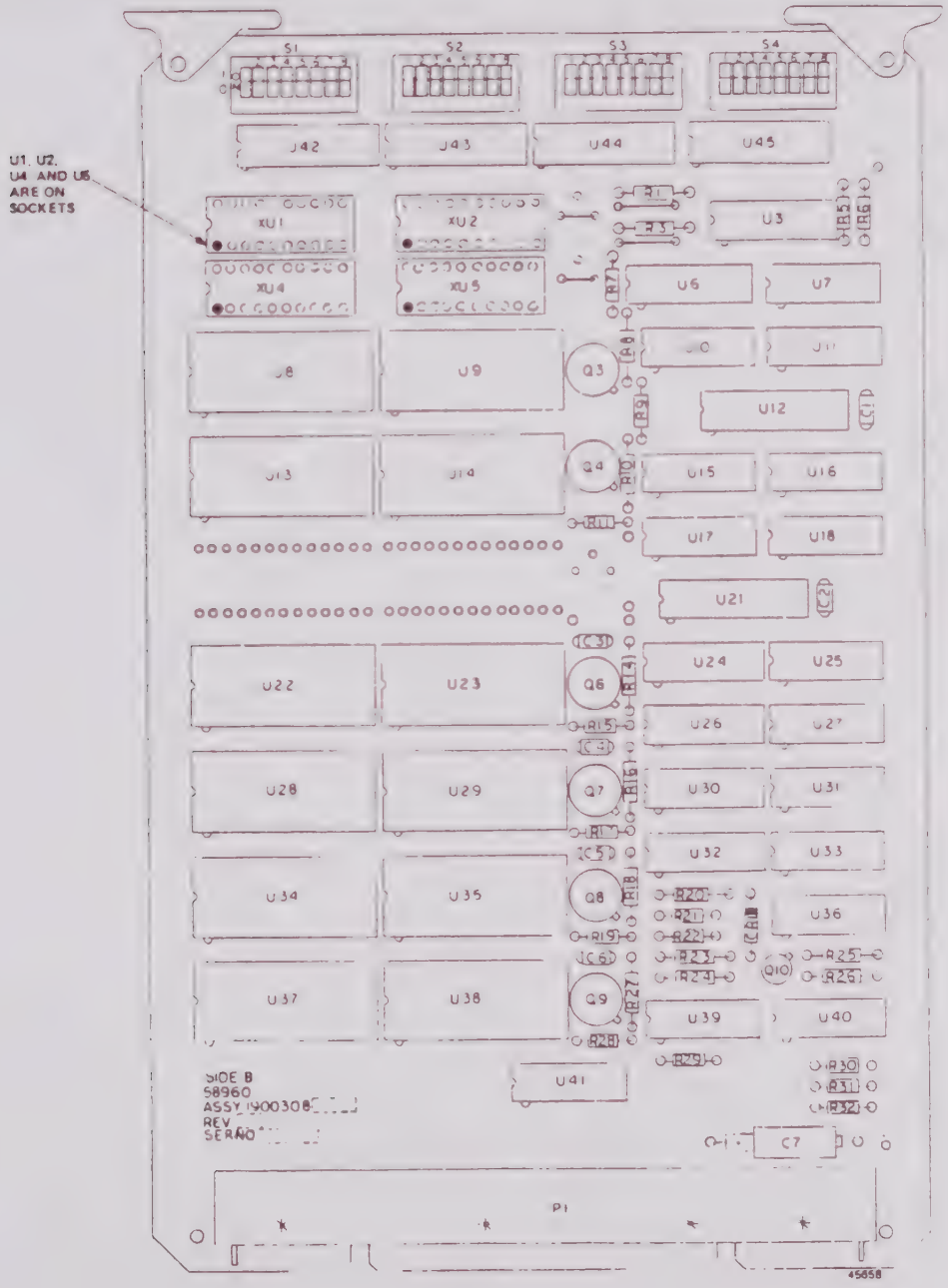

Figure 1
A6 Memory Card

During the first cycle leak test the Schwien and the ADT-222B at 1 inHg. The leak rate must be less than .010 inHg per minute. The sequence for the cycle is shown in Figure 2 of this EB. The pressure rate during a cycle must not exceed 50 inHg/minute.

Set S1 switch bit 5 to 1 for Ps calibration or S1 switch bit 6 to 1 for Pt calibration. The ADT-222B will prepare for a new calibration entry. An "A" will appear in the display, and for five seconds the number of unused calibration points will be displayed:

A ∅ ∅ ∅ 19

for Ps calibration, or

A ∅ ∅ ∅ 22

for Pt calibration.

The previous EAROM calibration is bypassed as well as the SSL/QCL Limits.

Calibrate the ADT-222B in the measure mode. Use the Schwien to control the pressure at the appropriate port of the ADT-222B. Starting from the lowest pressure in Table 1 or 2, depending on Ps or Pt calibration, establish that pressure at the appropriate ADT-222B port with the Schwien*. Once the pressure is stable, set the command switches for the side being calibrated to the true pressure value - as determined by the Schwien. Operate the push button which will set the True Pressure flag, signalling to the ADT-222B that the setting on the command switches is valid. Do not change the Schwien pressure on the command switches until the ADT-222B removes the number of unused calibration points and displays the pressure again.

*For field calibration select the optimal calibration pressures instead of the pressures given in Table 1 or 2.

6. (cont)

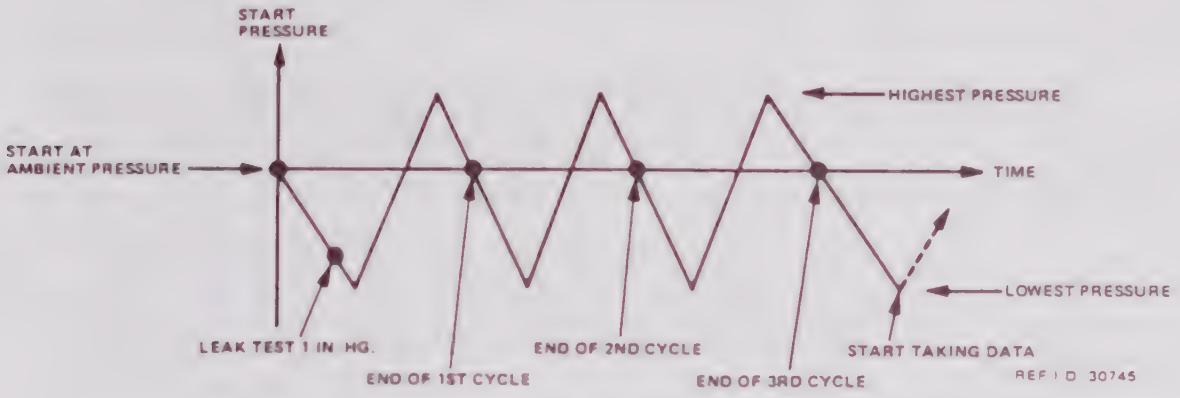

Figure 2

If for any reason the pressure is held near 1 inHg for more than 20 minutes you must not attempt to take the accuracy data but instead vent the ADT-222B to atmosphere and run the 8 hour stabilization over again. At the end of the third cycle, proceed down to the lowest pressure point and calibrate the unit using the automatic sensor recalibration feature.

To enter a calibration point, either push the rear panel true pressure button or connect a SPST normally open push button switch to pins B and C of the rear panel dynamic input connector (J2). Either of these switches will operate the true pressure flag. If the rear panel push button is used, operate it slowly so that you don't vibrate the ADT-222B and disturb the pressure control at the instant of calibration.

Turn on the SSL and QCL Lights.

During the Ps and Pt calibrations, plot the pressure error versus pressure at each calibration point on the Ps (Figure 3), or Pt (Figure 4) graph. The pressure error is equal to the displayed pressure minus the true pressure. Plot it with a dotted line to distinguish it from the accuracy plot to be performed in section 7.

For Ps calibration*, start from 0.310 inHg and calibrate at each of the 17 points listed in Table 1. When the calibration is complete, return the pressure to 30 inHg and set S1 switch bit 5 back to 0. Wait until the "A" in the display disappears before changing any of the ADT-2228 controls.

For Pt calibration*, start from 0.490 inHg and calibrate at each of the 21 points listed in Table 2. When the calibration is complete, return the pressure to 30 InHg and set S1 switch bit 6 back to 0. Wait until the "A" in the display disappears before changing any of the ADT-2228 controls.

*For field calibration select the optimal calibration pressures instead of the pressures given in Table 1 or 2.

Turn on (UP) S2 bit 2 (Padlock). After all calibration has been completed and Padlock has been turned on, measure the Padlock voltage at A6 pin 16. This voltage must be less than 0.1 volt dc.

7. Ps/Pt ACCURACY TEST

Proceed down to the lowest pressure point and take the data (from the display) in increasing pressure. Plot this data on the Ps (Figure 3), or Pt (Figure 4) graph. The data points are given in Tables 3 and 4. If the Ps or Pt data points are not within the accuracy specification, repeat section 6 (Automatic Sensor Recalibration P_S/P_T) of this EB. If it does not pass the second time, install a new sensor.

Set PSCTA, Switch 1, Bit 3 to "True" = 1 for P_S. This will result in the continual display of the lowest true pressure, and then the correction. Record these in Table 5 and press the True Pressure Button to advance the display to the next point. Fill in Table 5 with the calibration points displayed. When all points have been displayed the lowest point will be displayed again on the next push of the True Pressure Button. Reset PSCTA to 0. Then set PTCTA, Switch 1, Bit 4 to "True" = 1 for P_T and repeat, filling in Table 6. Reset PTCTA to 0. The ADT-222B will go to self test when these switches are turned off. Before turning on either of these switches put the ADT-222B in the P_S/P_T inHg measure mode.

TABLE 1

PS CALIBRATION

Cal Point	Pressure (inHg)	"Calibration Points Remaining Counter" Displayed After Operation of True Pressure Button
7.01	.310	18
7.02	.660	17
7.03	2.000	16
7.04	4.000	15
7.05	6.500	14
7.06	9.500	13
7.07	12.500	12
7.08	15.500	11
7.09	18.500	10
7.10	21.500	9
7.11	24.500	8
7.12	27.500	7
7.13	30.500	6
7.14	33.500	5
7.15	36.500	4
7.16	39.000	3
7.17	40.010	2

TABLE 2

PT CALIBRATION POINTS

Cal Point	Pressure (inHg)	"Calibration Points Remaining Counter" Displayed After Operation of True Pressure Button
7.18	.490	21
7.19	.750	20
7.20	2.000	19
7.21	4.000	18
7.22	6.500	17
7.23	9.500	16
7.24	12.500	15
7.25	15.500	14
7.26	18.500	13
7.27	22.000	12
7.28	26.000	11
7.29	30.000	10
7.30	34.500	9
7.31	39.500	8
7.32	46.000	7
7.33	55.000	6
7.34	65.000	5

TABLE 2 (cont)

PT CALIBRATION POINTS

Cal Point	Pressure (inHg)	"Calibration Points Remaining Counter" Displayed After Operation of True Pressure Button
7.35	75.000	4
7.36	85.000	3
7.37	95.000	2
7.38	100.010	1

The ADT-222B covers must not be off the unit for more than 1 minute out of any 10 minute period during any part of this accuracy test.

Whenever the P_S or P_T pressure sensors are over-pressured, ($P_S \geq 40.300$ or $P_T \geq 100.300$) the ADT-222B will enter self test, and start venting toward atmosphere. The venting process can be stopped by entering the measure mode via selecting a display unit.

The venting process will vent the internal and external pneumatic systems.

Note that an "E" must not appear in the display for any of the data points.

TABLE 3

STATIC PRESSURE ACCURACY

Test No.	Input Pressure (inHg)	Static Pressure Display Reading (Minimum)	(Maximum)	(Nominal)
7.01	.320	.317	.323	.320
7.02	1.000	.997	1.003	1.000
7.03	3.000	2.997	3.003	3.000
7.04	5.000	4.997	5.003	5.000
7.05	8.000	7.997	8.003	8.000
7.06	11.000	10.997	11.003	11.000
7.07	14.000	13.997	14.003	14.000
7.08	17.000	16.997	17.003	17.000
7.09	20.000	19.997	20.003	20.000
7.10	23.000	22.997	23.003	23.000
7.11	26.000	25.997	26.003	26.000
7.12	29.000	28.997	29.003	29.000
7.13	32.000	31.997	32.003	32.000
7.14	35.000	34.997	35.003	35.000
7.15	38.000	37.997	38.003	38.000
7.16	40.000	39.997	40.003	40.000

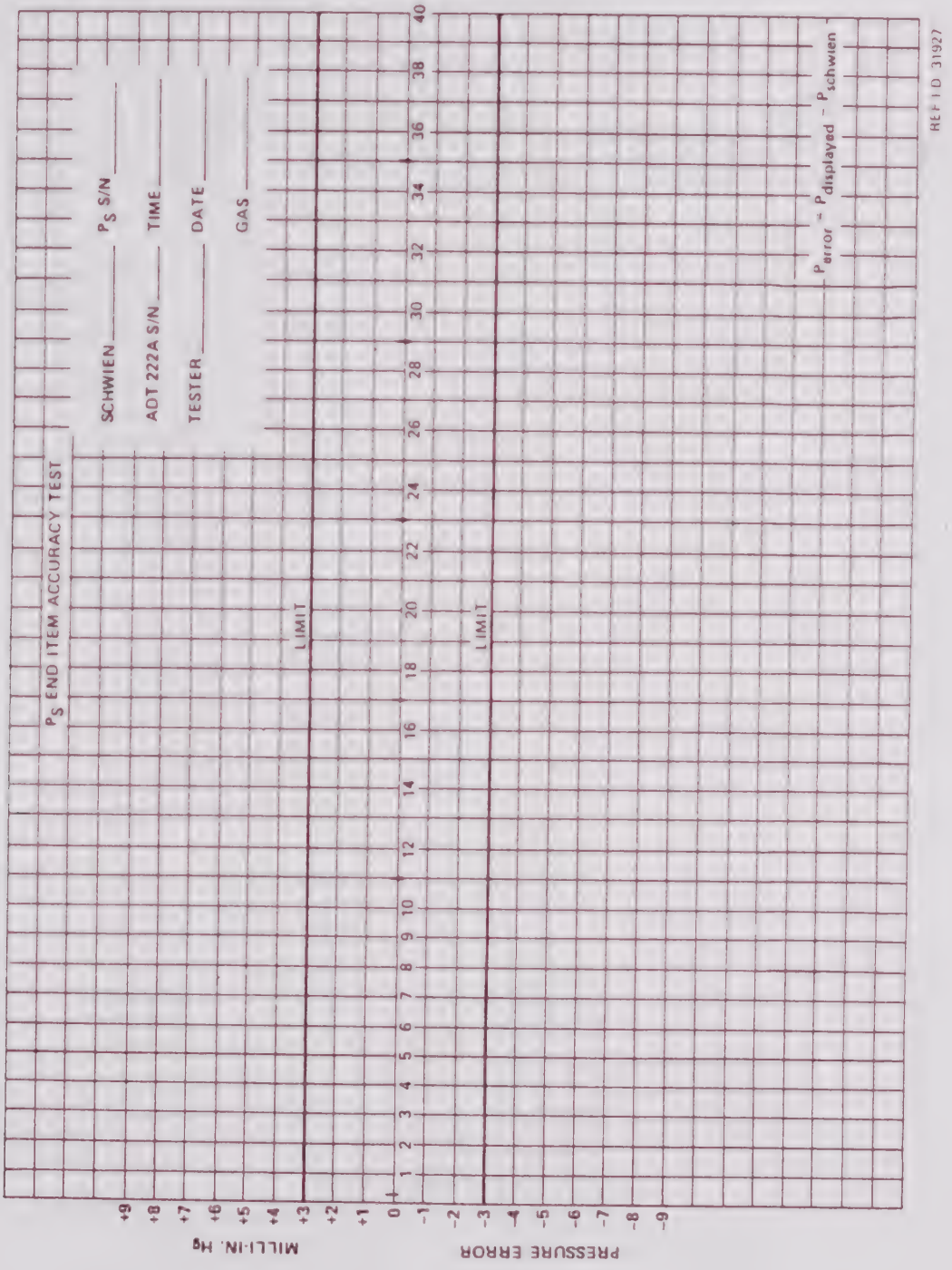
P_S END ITEM ACCURACY TEST
SCHWIEN _____ P_S S/N _____
ADT 222A S/N _____ TIME _____
TESTER _____ DATE _____
GAS _____
LIMIT
LIMIT
$P_{error} = P_{displayed} - P_{schwien}$
REF I D 31927
MILLI-IN. H_g
PRESSURE ERROR

Figure 3

TABLE 4

PITOT PRESSURE ACCURACY

Test No.	Input Pressure (inHg)	Pitot Pressure Display Reading (Minimum)	(Maximum)	(Nominal)
7.17	.500	.497	.503	.500
7.18	1.000	.997	1.003	1.000
7.19	3.000	2.997	3.003	3.000
7.20	5.000	4.997	5.003	5.000
7.21	8.000	7.997	8.003	8.000
7.22	11.000	10.997	11.003	11.000
7.23	14.000	13.997	14.003	14.000
7.24	17.000	16.997	17.003	17.000
7.25	20.000	19.997	20.003	20.000
7.26	24.000	23.997	24.003	24.000
7.27	28.000	27.997	28.003	28.000
7.28	32.000	31.996	32.004	32.000
7.29	37.000	36.996	37.004	37.000
7.30	42.000	41.996	42.004	42.000
7.31	50.000	49.996	50.004	50.000
7.32	60.000	49.996	60.004	60.000
7.33	70.000	69.994	70.006	70.000
7.34	80.000	79.994	80.006	80.000
7.35	90.000	89.994	90.006	90.000
7.36	100.000	99.990	100.010	100.000

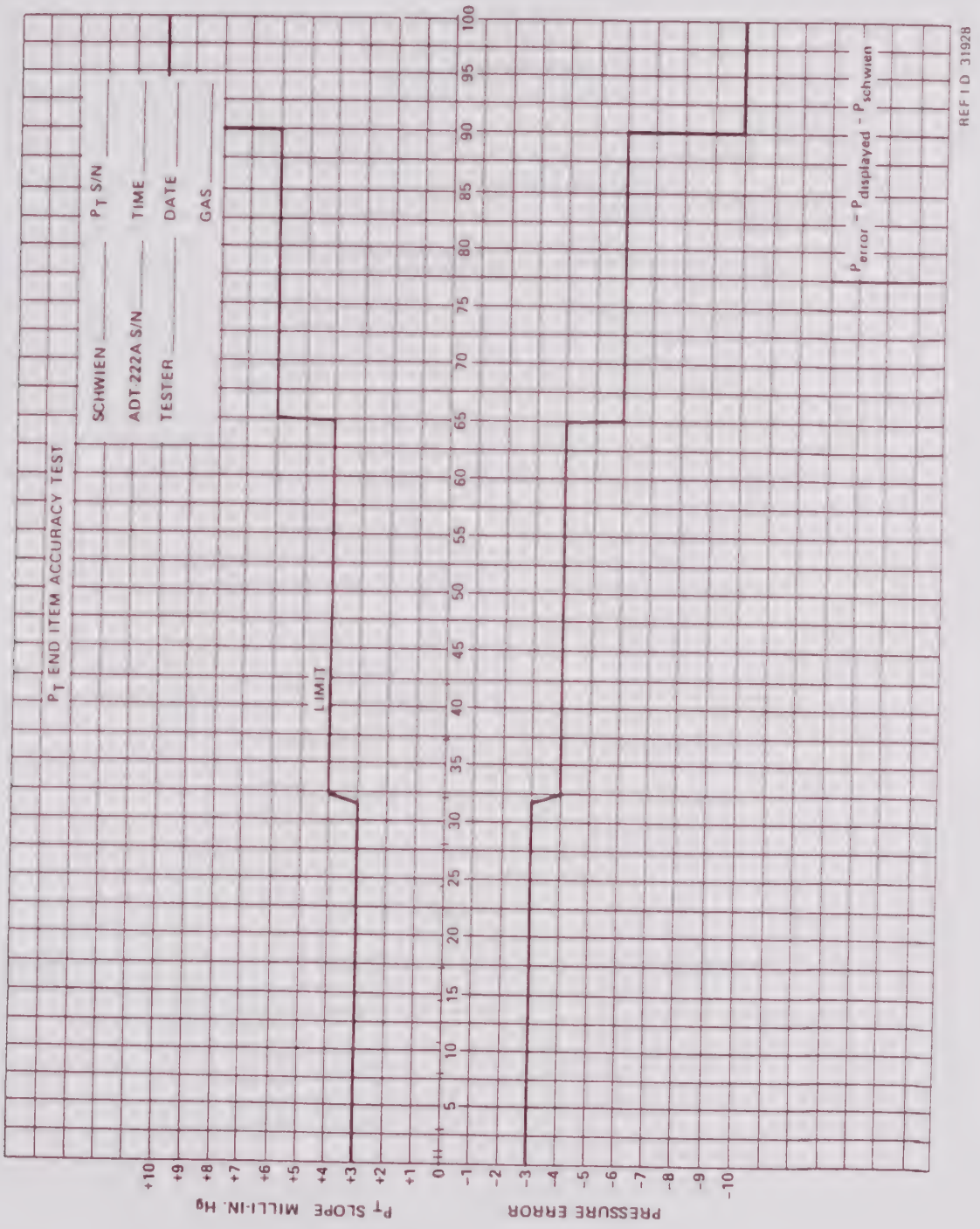
P_T END ITEM ACCURACY TEST
SCHWIEN _____ P_T S/N _____
ADT 222A S/N _____ TIME _____
TESTER _____ DATE _____
GAS _____
LIMIT
$P_{error} - P_{displayed} - P_{schwien}$
REF I D 31928
P_T SLOPE MILLI-IN. Hg
PRESSURE ERROR
+10 +9 +8 +7 +6 +5 +4 +3 +2 +1 0 -1 -2 -3 -4 -5 -6 -7 -8 -9 -10
0 5 10 15 20 25 30 35 40 45 50 55 60 65 70 75 80 85 90 95 100

Figure 4

TABLE 5

P_S CALIBRATION TABLE

Date _____; Tester _____

ADT-222B S/N_____; P_S S/N_____

	Cal. Pt (inHg)	Offset (inHg)
1.		
2.		
3.		
4.		
5.		
6.		
7.		
8.		
9.		
10.		
11.		
12.		
13.		
14.		
15.		

TABLE 5

P_S CALIBRATION TABLE

ADT-222B S/N_____; P_S S/N_____

	Cal. Pt (inHg)	Offset (inHg)
16.		
17.		
18.		
19.		

TABLE 6

P_T CALIBRATION TABLE

Date _____; Tester _____

ADT-222B S/N_____; P_T S/N_____

	Cal. Pt (inHg)	Offset (inHg)
1.		
2.		
3.		
4.		
5.		
6.		
7.		
8.		
9.		
10.		
11.		
12.		
13.		
14.		
15.		

TABLE 6

P_T CALIBRATION TABLE

ADT-222B S/N_____; P_T S/N_____

	Cal. Pt (inHg)	Offset (inHg)
16.		
17.		
18.		
19.		
20.		
21.		
22.		

8. PRESSURE SOURCE QUALITY

The pressure supply must be dry air or dry nitrogen regulated to 50 ± 5 psig. Note that the regulator must be capable of providing this regulation whether the ADT-222B is in the measure or control mode. Any good quality two stage pressure regulator will work.

The air/nitrogen (Dry Air (P4025722)/Dry Nitrogen (P695813) must be free of oil vapors and other contaminants; therefore, oil lubricated air compressing systems should not be used. The supply air should be filtered to pass a maximum particle size of 15 microns (1×10^{-6} meters) and should have a maximum dew point of -50°C. Minimum flow capability of the pressure source should be .1 cubic foot per minute (or 2.8 liters per minute) at 50 psig (or 3.5 Kgs/cm^2). This is equivalent to 2.1 lbm/hr or .44 SCFM. Hydrocarbon content must be less than 15 ppm.

9. VACUUM SOURCE QUALITY

Two 50 liters/min free air displacement (Edwards Speedivac 2) Vacuum Pumps or equivalent must be used. A separate pneumatic line must be run from each vacuum pump to the V_S or V_T rear panel vacuum connections on the ADT-222B. This line must not have more restriction to flow than a 3/8 inch inside diameter line 10 feet long. Thus if a longer line is necessary it must have a larger I.D.

These connections must be leak free and the pumps in good condition so as to pass the following test. With P_S controlling at .5 inHg the pressure at the V_S vacuum fitting must be less than .2 inHg absolute and with P_T controlling at 1.5 inHg the pressure at the V_T vacuum fitting must be less than .4 inHg absolute.

One 300 liter per minute free air displacement (Sargent Welch Model 1373B) or equivalent vacuum pump may be used. Use 3/8 ID minimum for the V_S and V_T lines. Connect a 3/8 ID minimum Tee at the pump to minimize cross talk between P_S and P_T. Unless stated otherwise, two 50 liters/min vacuum pumps are to be used to perform the tests in this EB.

10. VACUUM PUMP SHUT DOWN

As soon as the vacuum pumps are shut down, the vacuum lines should be disconnected from the back panel of the ADT-222B. This will bring the pressure in the vacuum system up to atmospheric pressure. This is necessary to ensure that no oil vapor will diffuse from the vacuum pump oil system into the ADT-222B pneumatic system.

If you don't want to disconnect the vacuum lines but still want to turn off the pumps, follow this procedure. Turn on the SSL QCL lights. Go to the control mode and wait for pressure equalization to complete. Turn off both vacuum pumps, open both front panel shutoff valves and vent the ADT-222B to atmosphere. Wait 5 seconds and then command $P_S = P_T = 20.0$ inHg. Note that "AS" will appear in both displays. Wait for 15 seconds and then push the measure button. Place the caps hanging on the chains loosely over the P_S/P_T ports. This procedure will bring the pressure in the vacuum lines up to atmospheric pressure.

11. PRESSURE OVERRANGE TESTS

Put the ADT-222B in the P_S/P_T inHg measure mode. Slowly apply 41 ± .5 inHg absolute to the P_S fitting. The ADT-222B will enter self test and vent the pressure to atmosphere. Close the front panel manual valve. Wait at least two minutes for the venting to complete and then select P_S/P_T inHg measure mode. The pressure should be within 1 inHg of atmosphere.

Put the ADT-222B back in the P_S/P_T inHg measure mode and slowly apply 101 ± .5 inHg absolute to the P_T fitting. The ADT-222B will vent the internal pressure to atmosphere. Close the front panel manual valve and verify the venting process as above. Note, this venting process can be monitored by grounding Pin J4-35 on the round ATE rear panel connector.

12. P_S GAIN SWITCH ADJUSTMENT (PRELIMINARY)

In sections of this EB, a signal generator is required. A Wavetek Model 111 will be adequate for this requirement - if not available, a signal generator capable of producing both sine and square waves from .1 to 1.6 Hz with an output continuously adjustable from .01 to 10 volts peak to peak may be used. The signal generator shall be connected to the ADT-222B via the dynamic input connector located on the rear panel of the ADT-222B.

The Dynamic Input switch to select P_S or P_T dynamic input is a split push button switch located on the ADT-222B front panel. The operation sequence of the button is cyclic: OFF-P_S ON-OFF-P_T-ON.... When P_S or P_T dynamic input is selected during pressure maintenance, the light will flash until the unit has been in pressure maintenance for ten seconds, then the light will stay on continuously and the dynamic input signal will start modulating the pressure. If P_S or P_T dynamic input is selected in any state other than pressure maintenance, the light will flash continuously, indicating that a P_S or P_T DI has been requested. Only after the ADT-222B pressures are stable and a ten second delay has elapsed allowing the digital integrator to correct for all the analog errors will the ADT-222 start modulating the pressure.

In sections of this EB, references will be made to overshoot ringing. The following figure depicts a square-wave without overshoot or ringing, a square-wave with overshoot, and one with overshoot and ringing.

Figure 5

In sections of this EB, measurements will be required using an oscilloscope. Unless otherwise specifically stated, the oscilloscope must be a Tektronix Type 7633 with a 7A22 plug-in or equivalent. The bandwidth of the plug-in must be set to 100 Hz and the scope must be dc-coupled. The scope must be isolated using a isolation plug from the power-line ground and the scope probe ground must be connected to the ground of the card being calibrated.

The inner loop gain can be changed via switch bits on switches 2, 3, and 4. See section 4.1. The tests performed in section 12 and 13 are intended to verify that these gain settings are proper. Before performing these tests, the gain settings for PSNC, PSIC, PSEC, and for PTNC, PTIC, PTEC should be set to 1.000 (see Gain Table in section 4.1). These gain settings may be adjusted if necessary to pass the tests in sections 12 and 13. See description in section 24.

Decrease the multiplication factor if the trace on the scope starts to ring. Some overshoot is acceptable in the following tests. Record the switch settings. Keep the amplitude small enough so that the rise and fall waveforms are nearly symmetrical.

The tests in this section may be performed with volume connected by alternating between a square wave input with the P_S manual valve closed and a sine wave input with the P_S manual valve open.

Connect a 60 cubic inch volume tank to the P_S Channel via a two foot long 3/16 inch I.D. hose. Place the ADT-222B in front panel control mode (P_S/P_T inHg) and command 32.000 inHg in the P_S channel. When this pressure is achieved turn on P_S dynamic input.

Monitor TP1 (f/V) of A13 with a scope. Close the P_S manual valve. Connect a signal generator to the back panel dynamic input connector. Set the signal generator to produce a square wave and set its frequency to 1 Hz. Adjust its amplitude to produce less than .010 volt peak to peak on the scope and note the waveform on the scope. (A smaller amplitude must be used if the noise level permits good resolution of the signal at TP1). There should be no ringing.

Open the P_S manual valve. Set the signal generator to produce a sine wave with a frequency of .1 Hz and an amplitude of less than .02 volt peak to peak on the scope. Change the frequency (but not the amplitude) of the signal generator to 1.6 Hz and note the signal on the scope. Amplitude must be greater than or equal to .014 volt peak to peak or .71 * amplitude at .1 Hz.

Turn off the dynamic input button and command the P_S channel to 15.0000 inHg. When this pressure is achieved turn on P_S dynamic input button and repeat the square wave test and the sine wave test.

Turn off the dynamic input button and command the P_S channel to the pressure where the P_S K poly is maximum. The pressure point where the K poly is maximum (approximately 1 to 2 inHg) should be obtained when the sensor was curvefitted from the dense data using the Univac System. When this pressure is achieved, turn on P_S dynamic input button and repeat the square wave test and the sine wave test.

With the P_S channel at 0.500 inHg, repeat the square wave test and the sine wave test.

13. P_T GAIN SWITCH ADJUSTMENT PRELIMINARY

The tests in this section may be performed with volume connected by alternating between a square wave input with the P_T manual valve closed and a sine wave input with the P_T manual valve opened.

The inner loop gain can be changed via switch bits on switches 2, 3, and 4. See section 4.1. The tests performed in sections 12 and 13 are intended to verify that these gain settings are proper. Before performing these tests, the gain settings PSNC, PSIC, PSEC, and for PTNC, PTIC, PTEC should be set to 1.000 (see Gain Table in section 4.1). These gain settings may be adjusted if necessary to pass the tests in section 12 and 13. See description in section 24. Decrease the multiplication factor if the trace on the scope starts to ring. Some overshoot is acceptable on these tests.

Command P_t channel to 90.000 inHg. Monitor TP1 (f/V) of A12 with the scope.

Turn on P_t dynamic input and close the front panel manual valve on the P_T channel. Adjust the signal generator to produce a 1 Hz square wave with an amplitude on the scope of less than .015 volt peak to peak. Observe the shape of the wave on the scope - there shall be no ringing. (A smaller amplitude must be used if the noise level permits good resolution of the signals at TP1.)

Open the front panel manual valve on the P_T side (60 cubic inches still connected) and adjust the signal generator to produce a .1 Hz sine wave with an amplitude on the scope of less than .02 volt peak to peak.

Change the signal generator frequency to 1.6 Hz (do not disturb the amplitude) and the amplitude on the scope shall be greater than or equal to .014 volt peak to peak or .71 * amplitude at .1 Hz.

Turn off the dynamic input button and command the P_T channel to 45.0000 inHg.

Turn on P_t dynamic input and close the front panel manual valve for the P_T channel. Adjust the signal generator to produce a 1 Hz square wave with an amplitude on the scope of less than .015 volt peak to peak. Observe the shape of the wave on the scope: there shall be no ringing.

Adjust the signal generator to produce a .1 Hz sine wave, open the P_T front panel manual valve, and adjust the signal generator to produce less than .02 volt peak to peak amplitude on the scope.

Change the signal generator frequency to 1.6 Hz (do not disturb the amplitude) and note the amplitude on the scope: amplitude shall be greater than or equal to .014 volt peak to peak or .71 * amplitude at .1 Hz.

Turn off the dynamic input button and command the P_T channel to the pressure where the P_T K poly is at a maximum (about P_T = .9 mHg). Repeat the sine wave and the square wave test.

Turn off the dynamic input button and command the P_T channel to 1.500 inHg. Turn on P_T dynamic input and perform the square wave test and the sine wave test.

14. D/A VOLTAGE CHECK

Connect a digital voltmeter to A12 on the card rack wire wrap board (hot A12 pin 60 and ground A12 pin 74). Put the ADT-222B into self test by cycling power. During self test the voltage will cycle between -1, 0, and +1 volt dc. The tolerances are given below.

1.000 ± .005 volt dc
.000 ± .002 volt dc
-1.000 ± .005 volt dc

If these voltages are not within this specification adjust R21 or R23 on A7 (4022594). If minor adjustment to these resistors won't bring this voltage within specification, then something is wrong with A7, the card rack wiring or the power supply.

15. SELECTION OF P_S/P_T ERROR REGISTER TRIM RESISTOR

Put the ADT-222B in the control mode with units of altitude/airspeed, metric light off. Connect a strip chart recorder to TP6 (E#) of A13 (P_S). Set the strip chart speed to 1 mm/sec and the sensitivity to .2 volt/division (10 volts full scale). Run from -1,800 feet to 90,000 feet and 90,000 feet to -1,800 feet at 40,000 feet/minute. Note the error register voltage in both directions and select resistor R49 (4047707-901) until the error voltage in both directions is minimum. The error at TP6 must be adjusted to less than ±1 volt during this run. Use a decade resistor box and short shielded twisted pair to adjust R49. When the proper value is found, solder a resistor of this value in position for R49. Use Part No. 2500169. Check this resistor selection by recording the error register (TP6) runs again to verify that TP6 stays within ±1 volt during the runs. Peaks over 1 volt are allowed during the slowdown at 32 inHg.

Repeat the above procedure for P_T except connect strip chart to TP6 of A12. Set altitude to 16,000 feet and run airspeed from 0 to 1000 knots and 1000 to 0 knots. Repeat for altitude equal 67,000 feet. Select the value for R49 (7047705-901) to the same requirements as for R49 above. Solder this value in position for R49 of A12. Check this resistor selection by recording the error register (TP6) runs again to verify that TP6 stays within ±1 volt during the runs. Peaks over 1 volt are allowed during the slow down at 1000 knots.

16. MEASURE MODE TESTS

Put the ADT-222B into measure mode. Use a DVM to verify on A12 and A13 that TP2 (ILG Sample and Hold) is at +3 ± 0.1 volts, and that TP7 (Valve Drive) and TP9 (DI S α H) are both 0 volts ± 0.04 volts.

17. PRESSURE MAINTENANCE TESTS

A) Command P_S = .500 and P_T = 1.500 inHg in the P_S/P_T mode with the metric light off and at these pressures perform the following tests:

1) No E

After the displays reach the commanded pressures no "E" is allowed in either display.

2) Display Accuracy

The displays shall indicate:

P_S = .500 ± .001 inHg
P_T = 1.500 ± .001 inHg
P_S = 16.9 ± .1 mb
P_T = 50.8 ± .1 mb
Q_C = 1.000 ± .001 inHg
Altitude = 90,458 ± 10 feet
Airspeed = 143.7 ± .1 knots
MACH = 1.386 ± .003

3) MSR to CONTROL and CONTROL to MSR Transient

Connect a pressure measuring device such as another ADT-222A or mercury manometer to the P_S or P_T pneumatic ports. Measure the pressure transient when going from control to measure and from measure to control. The peak transient during either transition must be less than ±.020 inHg for both P_S and P_T.

4) TP1 Noise

With the ADT-2228 back in control mode connect a scope to TP1 (F/V) of A12 (P_T) (4047705-901) or A13 (P_S) (4047707-901). The bandwidth of the scope plug-in must be set for DC to 100 Hz. Use a X10 probe. The noise at TP1 must be less than 400 microvolts (1.1 mV pp) rms for both P_S and P_T.

5) Overshoot

Set the altitude rate to 40,000 feet/minute and the P_T rate to 250 milli-inHg/second. Command P_S to 10.5 inHg and as soon as P_S exceeds 1.5 inHg command P_S back to .5 inHg. Watch the P_S display for overshoot as the pressure comes into .5 inHg. The overshoot must be less than or equal to .001 inHg.

Command P_T to 21.5 inHg and as soon as P_T exceeds 2.5 inHg, command P_T back to 1.5 inHg. Watch the P_T display for overshoot as the pressure comes into 1.5 inHg. The overshoot must be less than or equal to .001 inHg.

6) Digital Integrator Voltage

Connect a VOM or equivalent to TP9 (DI + FFF) of A12 (P_T) (4047705-901) or to TP9 of A13 (P_S) (4047707-901). Measure the dc voltage. This voltage must be less than ±2 volts dc. Before making the measurement you must wait at least 15 seconds after the last command enter.

7) Dynamic Drift Rate

Allow the pressure to stabilize until the display indicates P_S = .500 and P_T = 1.500 inHg. Turn on dynamic input. The P_S display shall not drift more than .005 inHg/minute. Time this drift rate for 1 minute immediately after operating the dynamic button.

Turn on P_T dynamic input. The P_T display shall not drift more than .005 inHg/minute. Time this drift rate for 1 minute immediately after operating the dynamic button.

8) Dynamic Feedthru

Apply a square wave to the dynamic input connector on the back panel of the ADT-222B pin A (high) and pin B (low). Adjust the square wave amplitude for 15 ± 1 volts peak to peak and the frequency for .1 ± .05 Hz. The front panel dynamic input lights must be off. The P_S and P_T displays must move less than ±.001 inHg.

B) Command P_S = 15.000 inHg and P_T = 45.000 inHg in the P_S/P_T inHg mode.

1) Repeat test A-1).

2) Repeat test A-2) using these values

P_S = 15.000 ± .001 inHg
P_T = 45.000 ± .001 inHg
P_S = 508.0 ± .1 mb
P_T = 1523.9 ± .1 mb
Q_C = 30.000 ± .001 inHg
Alt = 17,906 ± 1 feet
A/S = 693.0 ± .1 knots

3) Repeat test A-3).

4) Repeat test A-4).

5) Repeat test A-5) except command both above and below P_S = 15 and P_T = 45 inHg and as soon as the displayed pressure exceeds 1 inHg deviation from the above pressures command the pressure back to P_S = 15 or P_T = 45. Watch the P_S and P_T display for overshoot as the pressures come into P_S = 15 and P_T = 45 inHg. Overshoot must be less than or equal to .001 inHg.

6) Repeat test A-6).

7) Repeat test A-7) except at P_S = 15.000 and P_T = 45.000 inHg.

8) Repeat test A-8).

C) Command P_S = 32.000 and P_T = 90.000 inHg in the P_S/P_T inHg mode.

1) Repeat test A-1.

2) Repeat test A-2) using these values.

P_S = 32.000 ± .001 inHg
P_T = 90.000 ± .001 inHg
P_S = 1083.6 ± .1 mb
P_T = 3047.7 ± .1 mb
Q_C = 58.000 ± .001 inHg
Alt = -1870 ± 1 feet
A/S = 904.9 ± .1 knots

3) Repeat test A-3).

4) Repeat test A-4).

5) Repeat test A-5) except command below P_S = 32 and P_T = 90 inHg and as soon as the displayed pressure exceeds 1 inHg deviation from the above pressures command the pressures back to P_S = 32 and P_T = 90 inHg. Watch the P_S and P_T display for overshoot as the pressures come into P_S = 32.000 and P_T = 90.000 inHg. The overshoot must be less than or equal to .001 inHg.

6) Repeat test A-6).

7) Repeat test A-7) except at P_S = 32.000 and P_T = 90.000 inHg.

8) Repeat test A-8).

17.1 a) Connect a jumper from pin a of the P_S sensor connector to chassis ground. "dd" shall appear in the least significant digits of both displays. Remove jumper and repeat using pin a of the P_T sensor connector. Remove Jumper.

18. DYNAMIC INPUT MODULATION

Apply a square wave to the dynamic input connector on the back panel of the ADT-222B pin A (high) and pin B (low). Adjust the square wave amplitude for 1.0 ± .1 volt peak to peak and the frequency for .1 ± .05 Hz. Operate the front panel P_S/P_T dynamic input button to select P_S dynamic input. Command P_S = 30.000 and P_T = 30.000 inHg. After the DI light stops flashing monitor the P_S display. The P_S display must indicate peak to peak modulation between .050 to .150 inHg.

Operate the P_S/P_T dynamic input button to select P_T. The P_T display must indicate peak to peak modulation between .050 to .150 inHg.

Remove the signal generator from the rear panel dynamic input connector and measure the drift rate in the P_S and P_T displayed pressures with the appropriate dynamic light on, for P_S at .5, 15, and 32 inHg, and for P_T at 1.5, 45, and 90 inHg. The maximum drift rate must be less than ±.005 inHg per minute.

19. AVERAGE ALTITUDE RATE ACCURACY

Put the ADT-222B in the ALT/A/S control mode, with the metric light off, and turn on the altitude precision rate light. Set the altitude rate to 20,000 feet/minute. Set the airspeed to 300 knots. Start at H = 0 foot and command H = 80,000 feet. Measure the time to fly past 10,000 to 70,000 feet and again the time to fly past 70,000 to 10,000 feet. Start the return run at 80,000 feet and command to 0 foot. The time to move between 10,000 and 70,000 feet must be 180.0 ± 1.8 seconds for both directions. Also the total duration that the precision rate light flashes between 10,000 and 70,000 feet must be less than 10 seconds for either direction.

20. AVERAGE AIRSPEED RATE ACCURACY

Put the ADT-222B in the ALT/A/S control mode with the metric light off and turn on the airspeed precision rate light. Set the A/S rate to 250 knots/minute. Command the altitude to 20,000 feet. Start the airspeed at 50 knots and command to 1000 knots. Then command back to 50 knots. Measure the time to fly past 100 to 850 knots and 850 to 100 knots. The time for both directions must be 180 ± 1.8 seconds. Also the total duration that the precision rate light flashes between 100 and 850 knots must be less than 10 seconds for either direction.

21. Q_C TRANSIENT CONTROL

Put the ADT-222B into the P_S/Q_C inHg control mode. Set Q_C for 0.000 inHg and the Q_C rate for 500 milli-inHg/second. Set the altitude rate for 20,000 feet/minute and run the P_S pressure from 32 to 1.5 and from 1.5 to 32 inHg. Watch the Q_C display during both runs. The Q_C display shall not deviate by more than .025 inHg.

22. DSSL AND DQCL LIMITS

Put the ADT-222B in the P_S/P_T inHg control mode. Turn off the DSSL (Disable Subsonic Limit) and DQCL (Disable Q_C Limit) pushbuttons. Command enter $P_S = P_T = 30.000$ inHg. When the displayed pressure reaches the commanded values, command $P_S = 3.0$ and $P_T = 30.0$. DSSL and DQCL must flash. Command $P_S = 30$ and $P_T = 30$. DSSL and DQCL must stop flashing.

23. FIXED ORIFICE VENTING TEST

This test verifies the correct installation and the cracking pressure of the fixed orifice venting check valve.

Connect the 200 in^3 tank to the P_T pressure port using a 6 ft 3/16 ID hose. Open the P_T valve. Close the P_S manual valve. Run the P_S pressure to 10 inHg and P_T to 15 inHg. Connect the L = Octavent signal of J4-35 on the back panel connector to ground and cycle power.

The ADT-222B will come up in a venting mode with P_S and P_T pressures displayed in inHg. The P_S pressure should move towards the P_T pressure within several minutes time. The exact time it takes is not important. However, if the P_S pressure should move to the P_T pressure in less than 5 seconds, the check valve is in backwards. After the P_S pressure equals the P_T pressure displayed, watch the displays for 15 seconds and verify that P_S does not exceed P_T by more than 2 inHg.

Disconnect J4-35 from ground and the ADT-222B will go to self-test.

Push CONTROL and command P_S to 0.5 inHg and P_T to 90 inHg. Push MEASURE. Wait 5 minutes. Monitor P_S and P_T drift rates. P_S must change less than 5 milli-inches Hg/min and P_T must change less than 20 milli-inches Hg/min. If this is not so, check Solenoid Valve 9 for leaks.

24. GAIN SWITCH ADJUSTMENT (FINAL)

While making the final strip chart runs for inclusion in the ITA packet, the gain switches for P_S and P_T no contact, exhaust contact, and inlet contact may need further adjustment. The following strip chart runs show examples where the gain must be increased and decreased. Once the switches have been adjusted, record the decimal gain valve for PSNC, PSIC PSEC, PTNC, PTIC, and PTEC on the final strip chart runs.

Monitor TP4 (SA) on A12 and A13. This is the inner loop sum amp error signal and it will oscillate between 10 and 100 Hz if the gain switches are set too high. Decrease the multiplier factor of the appropriate switch bits until the oscillation is eliminated. This condition is most probable when zero volume is connected to the ADT-222B.

Monitor TP6 (ER) on A12 and A13. This is the outer loop error signal. If the gain switches are set too low, this signal will oscillate with a period of about 2 to 5 seconds. Increase the multiplier factor of the appropriate switch until the oscillation is eliminated. This condition is most probable when a 200 cubic inch volume is connected to the ADT-222B.

The following three pages are examples of improperly adjusted gain switches. The first page shows several examples of approaches to -1800 ft with a P_S volume attached and decreasing gain settings. The bottom of the page shows an approach with minimum gain setting. The outer loop oscillates with too low a gain setting.

The second and third pages show the inner loop oscillating with too high a switch setting.

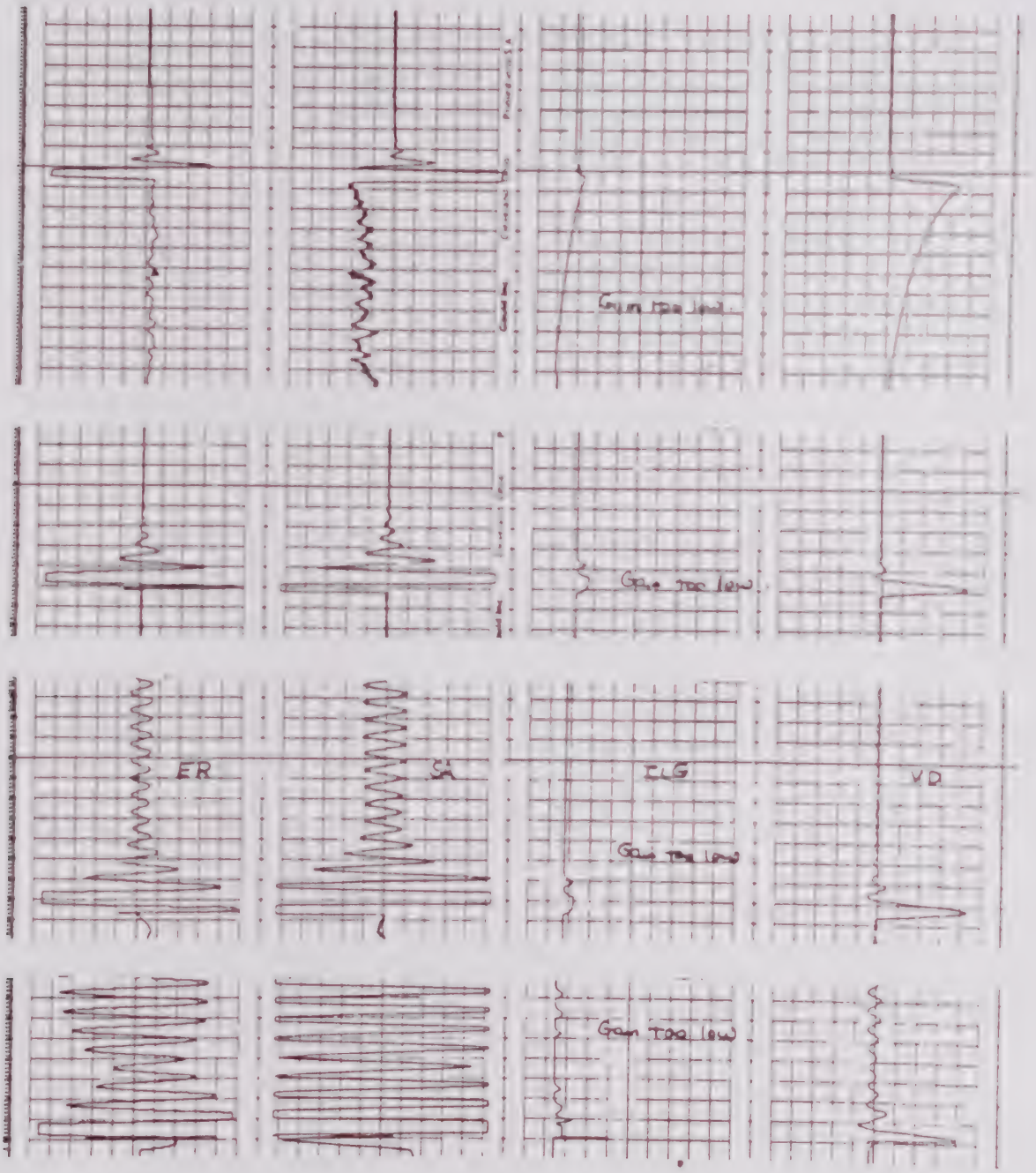
ER
SA
ELG
VD

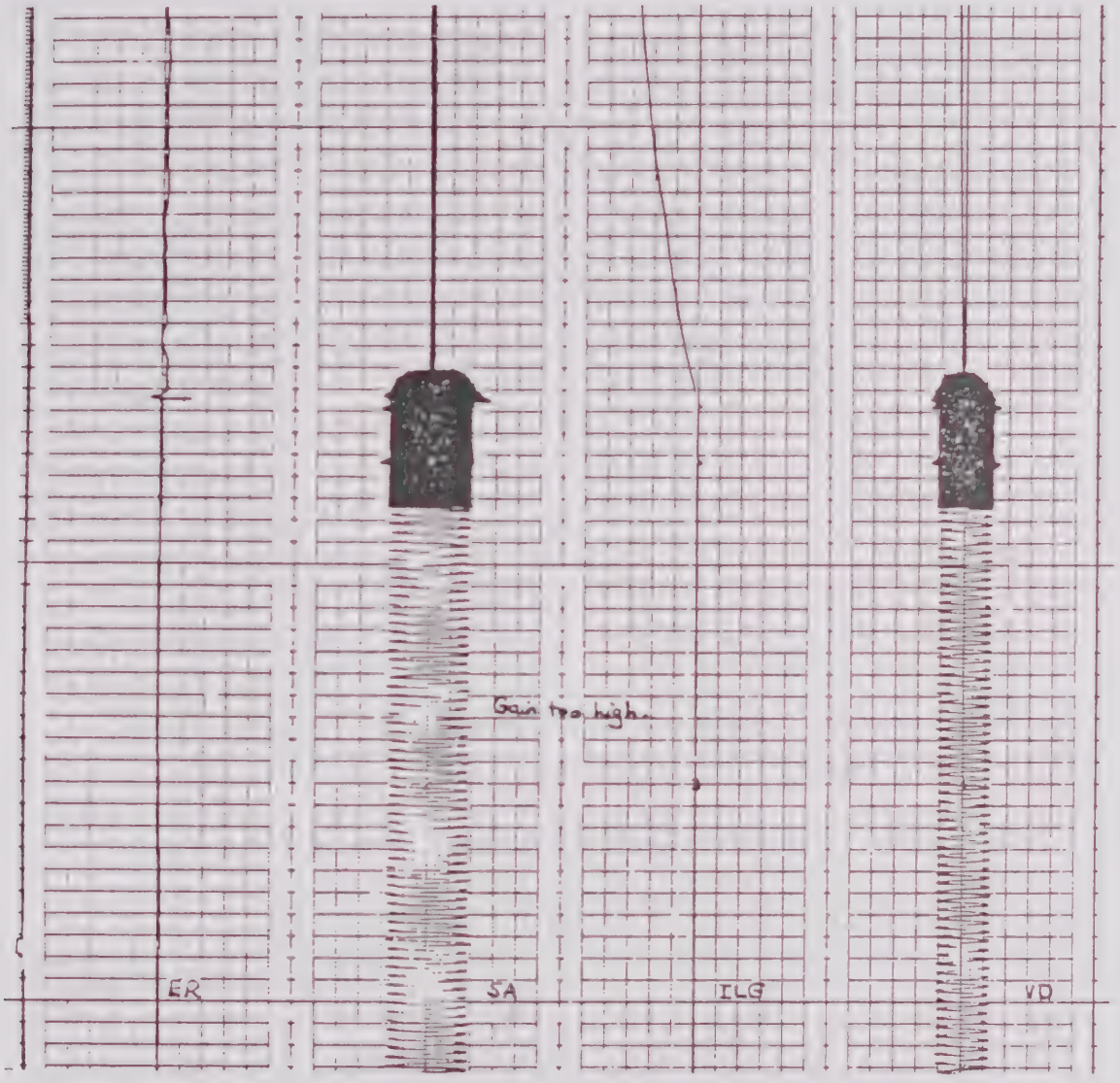
Gain too high.
ER
SA
ILG
VD

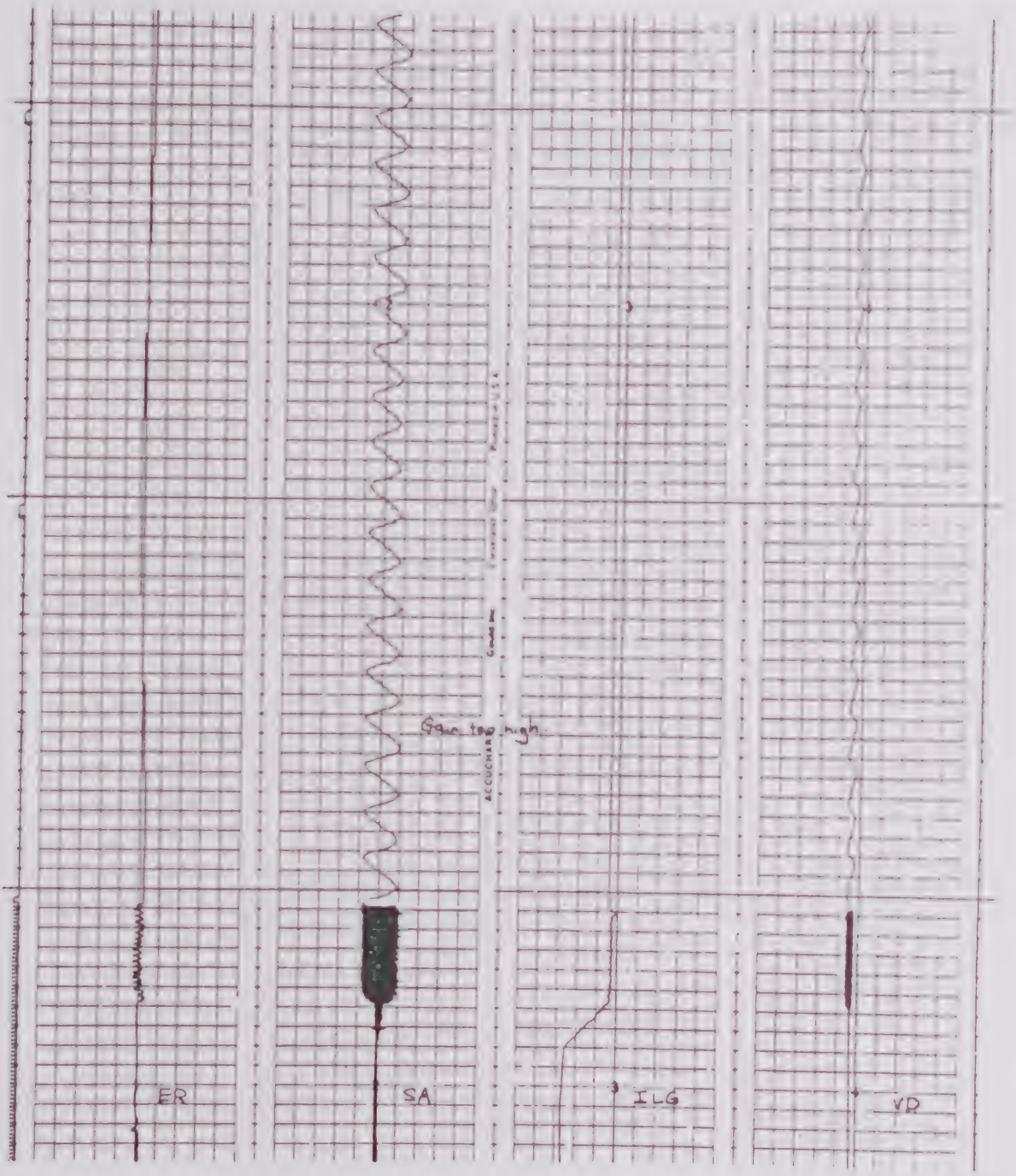
Gain too high.
ER
SA
ILG
VR

25. STRIP CHART RUNS

The strip chart runs described below provide a complete check on the quality of operation of the control system. Special attention should be given to the examination of these runs to assure that each ADT-222B is operating properly.

The strip chart runs described in this section are to be put into the ITA packet. Ground all the recorder test points and check the zero voltage position of each channel of the recorder, then connect this four channel strip chart recorder, (Gould Model 2400), equipped with four preamplifiers (Gould Model 13-4615-10) to the test points as listed in the tables in this section. Set the sensitivity as indicated and run at 1 mm/second paper speed. Filters and offsets should be turned off unless otherwise specified.

Self Test

Connect the strip chart to the following test points:

Channel No.	*Test Point No.	Name	Sensitivity
1	10	Coarse Feed forward (CFF)	.2V/mm (10V/FS)
2	6	Error Register (ER)	.2V/mm (10V/FS)
3	9	Digital Integrator + Fine Feed forward (DI+FFF)	.2V/mm (10V/FS)
4	2	Inner Loop Gain (ILG)	.2V/mm (10V/FS)

*Use test points on A12 for P_T runs.
*Use test points on A13 for P_S runs.

Vent the P_S and P_T pneumatic systems to atmosphere and put the ADT-222B into the self test mode by cycling the power. After the front panel lamp test (5 cycles of flashing lights) sequence is finished, run the strip chart for 30 seconds. Perform a run for P_T and a run for P_S. Then hook up channel 1 to TP1 on the A5 board and perform another run:

Channel 1	TP1 on A5	Internal DI Generation Analog (IDIGA)	.2V/mm (10V/FS)

P_S Runs

The remaining runs in this section are performed with the strip chart recorder connected to the following test points:

Channel	*Test Point No.	Name	Sensitivity
1	6	Error Register (ER)	.2V/mm (10V/FS)
2	4	Sum Amp (SA)	.05V/mm (2.5V/FS)
3	2	**Inner Loop Gain (ILG)	.2V/mm (10V/FS)
4	7	Valve Drive (VD)	.5V/mm (25V/FS)

**Position the strip chart pen so that ILG records from 0 to 10 volts instead of ± 5 volts.

*Use test points on A12 for P_T runs.
*Use test points on A13 for P_S runs.

Put the ADT-222B into the altitude/airspeed control mode with the metric light off. Set the altitude rate to 40,000 feet/minute, the airspeed to 600.0 knots and the airspeed rate to 500 knots/minute. Run the altitude from -1,800 feet to 90,000 feet and from 90,000 feet to -1,000 feet for each of the following three conditions.

Run 1 Displacement rate and zero volume (precision rate off)

Run 2 Precision rate and zero volume (precision rate on)

Run 3 Displacement rate and 200 cubic inches of volume

A displacement rate is achieved with precision rate light off. A precision rate is achieved with precision rate light on. For the volume runs use a 200 $inch^3$ volume tank (SPN 4050313-2). Connect a 6 ft 3/16 I.D. hose between the ADT-222B and the tank. After the tank and hose is connected to the ADT-222B run the pressure to 1.0 ± .5 inHg and leak test the assembly. Allow the air temperature to stabilize for 5 minutes at 1.0 ± .5 inHg and then test the leak. The pressure must move less than .008 inHg over 2 minutes.

P_T Runs

Put the ADT-222B into the altitude airspeed panel control mode. Set the altitude rate to 40,000 feet/minute, the airspeed rate to 500 knots/minute and run airspeed from 0 to 1000 knots and 1000 to 0 knots for each of the following six runs:

Group A (Command altitude to 16,000 feet before runs.)

Run 1 Displacement rate and zero volume

Run 2 Precision rate and zero volume

Run 3 Displacement rate and 200 inches^3

Group B (Command altitude to 67,000 feet before runs.)

Run 1 Displacement rate and zero volume

Run 2 Precision rate and zero volume

Run 3 Displacement rate and 200 inches^3

Group C

Run 1 P_S Measure, P_T Control

a) With dynamic input off, metric light off, select P_S/P_T mode and press the measure button. Vent P_S channel to ambient.

b) Connect the P_S pneumatic port of the UUT to a good quality pressure source (such as Schwien Manometer ADT-222B, ADT-222A, or ADT-222). If an ADT-222 A/B is used as the pressure source connect the P_T channel of the pressure source to the P_S channel of the UUT. Put the pressure source in its pressure control mode and command its P_T channel to P_T = 30.000 inHg.

c) Select the P_S/Q_C (metric off) mode on the UUT and push the P_S measure P_T control button. Set the UUT Q_C to 0.000 inHg and operate enter. When pressures have stabilized, command the pressure source to decrease the pressure on the P_S channel of the UUT toward 20.0 inHg at a rate of 1 milli-inHg/sec. Record 120 seconds on the strip chart recorder. Put DI+FFF on Channel 3. Repeat the run with the pressure source increasing pressure toward 32.0 inHg. Record 120 seconds on the strip chart recorder. Put DI+FFF on Channel 3.

d) While the pressure rate is being performed observe the P_T display of the UUT. 10 seconds after the rate has stabilized no "E" shall appear in the display. P_T display shall read 0 ± .001 inHg. Check this for pressure rates in both directions.

e) Change the pressure rate to 20 milli-inHg/sec. Note that an E shall appear in the P_T display. Check in both directions.

f) Return the UUT to measure and disconnect P_S port from pressure source.

Nozzle Contact Quality

Connect Channel 1 to TB2-5 and Channel 2 to TB2-3 on the P_S manifold assembly.

Connect Channel 3 to TB4-5 and Channel 4 to TB4-3 on the P_T manifold assembly.

Put the ADT-222B in P_S/P_T inHg, control mode with SSL/QCL on, altitude rate = 2000 ft/min, and P_T rate = 100 milli-inHg/sec. Open both manual valves to atmosphere. Run the strip chart and command both sides to 40 inHg. When AS appears on both displays, command both sides back to 10 inHg and run the strip chart until AS appears on both displays.

When the Nozzle Contact Signal switches to 0 volts, it must not go back over 1 volt continuously for more than 5 seconds at a time until the signal switches back to 5 volts.

Error Register Noise Runs

Reconnect the strip chart recorder to the following two test points:

Channel 1 to P_S TP6 (ER) (A13)

Channel 2 to P_T TP6 (ER) (A12)

Disconnect channels 3 and 4. Run the paper speed at 1 mm/second. Set the sensitivity of both channels 1 and 2 to 5 mV/mm (.25V/FS).

Run 60 seconds of P_S and P_T error register noise for each of the following three conditions:

1. P_S = .5 inHg at P_T = 1.5 inHg
2. P_S = 15 inHg and P_T = 45 inHg
3. P_S = 32 inHg and P_T = 90 inHg

Single Vacuum Pump Operation

The tests in this section are to be performed with a single 300 liter/minute free air displacement vacuum pump connected to the ADT-222B as described in the Vacuum Source Quality section. All runs are to be performed with 60 in^3 on both P_S and P_T.

For P_S, repeat Run 3 in P_S Runs.

For P_T, repeat Run 3 of Group A and Run 3 of Group B in P_T Runs.

Label All Runs

Label strip chart with the following information.

1. ADT-222B serial number, date and tester
2. P_S control valve manufacturer and serial number

   CV = Control Valve
   HS = Hydraulic Servo

3. P_T control valve manufacturer and serial number
4. P_S and P_T sensor serial number

5. PSNC = decimal gain value
   PSIC = decimal gain value
   PSEC = decimal gain value
   PTNC = decimal gain value
   PTIC = decimal gain value
   PTEC = decimal gain value

Label each run with the following appropriate information.

1. P_S or P_T
2. Displacement or precision rate
3. Zero volume or 60 inches^3 or 200 in^3
4. H = 16,000 feet or H = 67,000 feet
5. Error reg noise P_S or P_T pressure equals
6. P_S Measure/P_T Control (Split Control)

26. INSPECTION OF STRIP CHART RUNS

Inspect all runs for deviations from the description given below. Familiarize yourself with the typical runs given.

P_S/P_T Self Test Runs

Channels 1, 2, 3, and 4 must plot +1, 0, -1 volt cycles. Check these three levels using the strip chart. You should not be able to see any deviation larger than a pen width from the proper levels. If there is, check these test points with a digital voltmeter. The voltages at the test points must be:

-1 ± .055 volt
 0 ± .027 volt
+1 ± .055 volt

(CFF) Course Feedforward

This signal is not monitored in this EB except during self test. During a rate the CFF signal should be smooth. It should always stay within ±4.5 volts (except during a commanded slew). The only allowed step changes in voltage are at the command enters (CE). The slow down at the end of each rate should be a smooth exponential curve. The CFF trace should start at zero volt and end at zero volt for all runs.

(ER) Error Register

A) Displacement Rates

For all displacement rates the ER voltage should stay at 0 ± 1 volt. The trimming of the resistor to achieve this was described in section 15. The only time that the error register voltage should exceed ±1 volt is during slowdown as the ADT-222B nears its command pressure or when the control valve saturates and the control system enters auto slew. See typical runs.

The ER voltage is an instantaneous monitor of the quality of the pressure control. If during a rate the ER voltage is zero the pressure is exactly at the desired instantaneous value. If the ER is at 5 volts the pressure can be as much as .1 inHg away from its instantaneous desired value. Thus a smooth ER plot means an exceptionally good controlling unit.

B) Precision Rates

During precision rates it becomes more important to keep the ER close to zero volt. To aid this, the precision rate integrator (located on the P_S/P_T innerloop ECA A12/A13) is released. This integrator speeds up or slows down the instantaneous pressure rate to make the pressure more closely follow the desired values. The fact that this is happening can be seen by comparing the displacement rate ER run with precision rate ER run. You will see that the ER voltage is being pulled toward zero volts. Be sure this is happening for all precision rates. If it is not happening then the rate integrator is not working properly.

(DI + FFF) Digital Integrator + Fine-Feed-Forward

This signal is not monitored in this EB except during self-test. The digital integrator + fine-feed-forward voltage consists of two independent signals. These two signals are time multiplexed. This means that during a rate the digital integrator voltage (DI) is held constant while the fine feedforward FFF is changing. After the rate has finished and the pressure has stabilized the FFF is zero while the DI will change to a new value and then remain constant. This constant value must be within 0 ± 2 volt for all pressures. (Except for the P_S measure, P_T control run) This voltage can be thought of as a little man (woman) with a screwdriver that is constantly adjusting to zero all the analog drifts within the ADT-222A.

(ILG) Inner Loop Gain

This signal varies from +1 volt to +10 volts. It is input to the two multipliers and controls the gain of the inner loop. As the control valve moves pressure through its range at varying rates, its pneumatic gain varies. To compensate, the processor varies the electrical gain of the innerloop. This signal comes from the D/A through a S + H and a 1/2 second filter to the two multipliers. The innerloop gain varies as the square of the voltage at TP2. Thus the innerloop electronic gain can vary 100 to 1.

The vibrating diaphram pressure sensor gain also varies with pressure and the multiplier gain also compensates for this. The ILG voltage is a function of control valve nozzle contact as well as pressure and the processor will stairstep the gain voltage toward the new value. This stairstep is filtered with the low pass filter.

(VD) Valve Drive

The valve drive is the actual voltage applied to the pneumatic control valve by the ADT-222B control system. This voltage should be smooth during the pressure runs. At the command, entering a step change in valve drive is required to start the pressure moving and this step can be seen on the strip charts. For larger volumes a bigger step is required to the valve drive. Compare a zero volume run with a 200 inch^3 run.

For large volumes and high rates the valve drive can actually saturate. In this case the central loop will cut in and prevent the main integrator from running off. Auto slew will commence. During this time, the control loop will hold the valve drive between 275 and 300 milliamps. With single pump operation or with 200 cubic inches connected, the valve drive should not saturate for more than 30 seconds during any run in this EB.

Summing Amplifier (SA)

This is the inner loop error signal. This signal must be monitored when first powering on the ADT-222B to determine whether the inner loop gain is too high. If this signal oscillates between 10 and 100 Hz, the inner loop gain is too high and the three sets of switch bits for that inner loop must be set to a lower multiplication factor. During rates, this voltage should stay within ± 2.5 volts. If this voltage is closer to zero, it indicates that the inner loop is providing better pressure control because the inner loop error is smaller.

Nozzle Contacts (P_S IN, P_S EX, P_T IN, P_T EX)

Each of these four signals must not exceed 1 volt for more than 5 seconds at a time on nozzle contact. This will insure good contact between the flappler and nozzle during a slewed condition.

(ER NOISE) Error Register Noise

The error register noise must be less than 50 millivolts peak to peak for P_S and less than 75 millivolts peak to peak for P_T. This must be measured within a 20 second window.

P_S Measure/P_T Control (Split Control)

During split control the only signal of interest is the DI + FFF. Since the UUT is not executing a rate command, the FFF component of this signal will be zero. Because the UUT is in the P_S/Q_C split control mode, the UUT control system will try to drive the P_T pressure of the UUT to track the P_S pressure of the UUT. The UUT P_T pressure will be offset from the UUT P_S pressure by the commanded Q_C. Because the UUT P_S pressure is being driven at a constant rate via an external pressure source, the UUT P_T pressure must generate the same pressure rate at its P_T port. This P_T pressure rate is generated because the control system develops a new DI voltage. This is the voltage you see on the strip chart. The DI voltage must be within the range of ± 2 volts.

27. FLOW RESTRICTION TEST

Bring both P_S and P_T to atmosphere. With no load volume connected to the pressure ports of the ADT-222B and the manual valves closed, command P_S to .5 inHg and P_T to 1.5 inHg in the P_S-P_T inHg mode. Open both manual valves. Neither display should go lower than 4 inHg below atmosphere. If one does, check the internal lines through SV1, SV3, and the manual valves for any flow restriction.

28. TYPICAL STRIP CHART RUNS

The following pages show typical runs required by this EB. In addition, four more signals are shown for each run: CFF, DI+FFF, NOZ, and ASDB. They are included after the required runs and are shown only for reference.

Also shown is an example of the P_S side in Auto Slew.

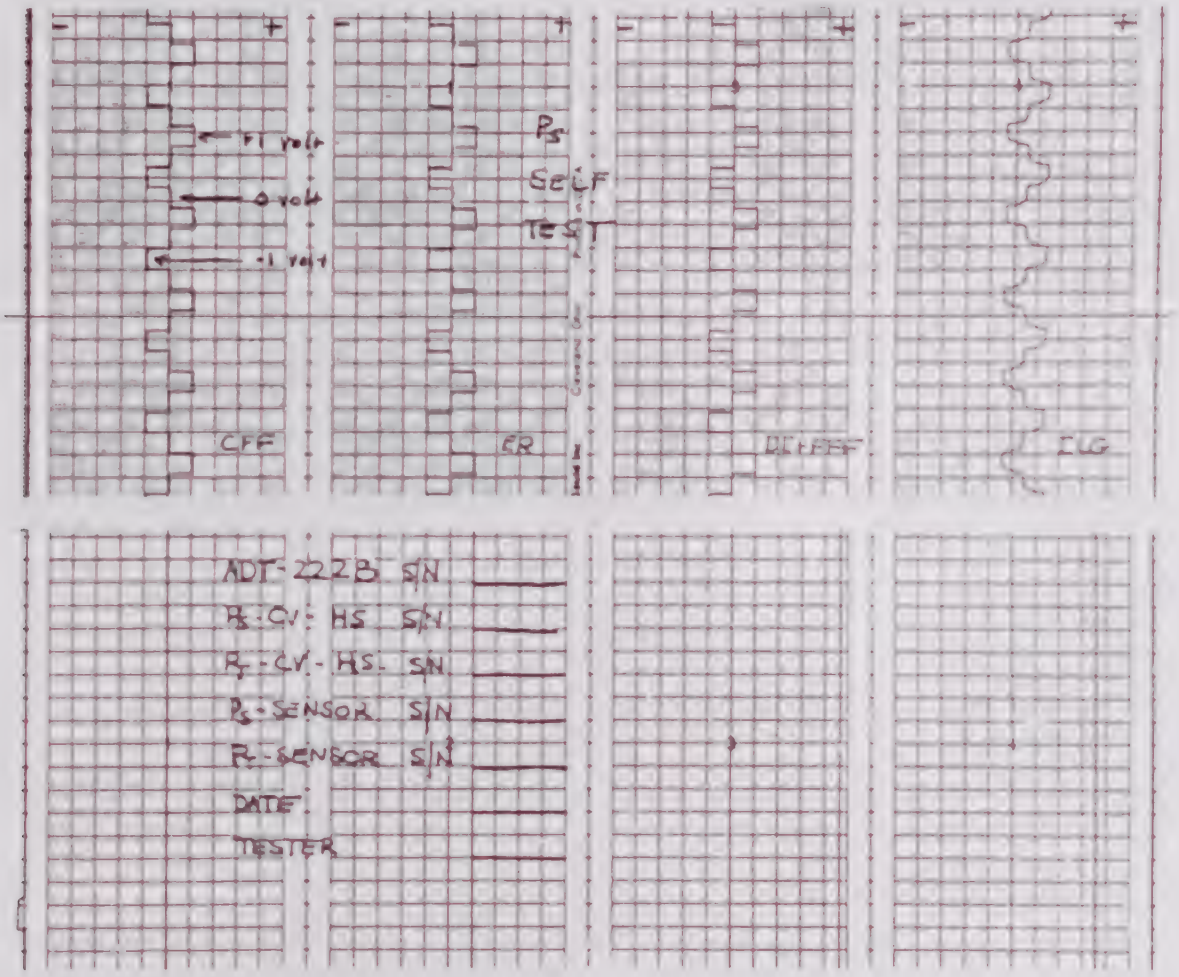
+1 volt
0 volt
-1 volt
P_S
SELF
TEST
OFF
ER
DEFROST
ILG
ADT-222B S/N
P_S-CV-HS S/N
P_T-CV-HS S/N
P_S-SENSOR S/N
P_T-SENSOR S/N
DATE
TESTER

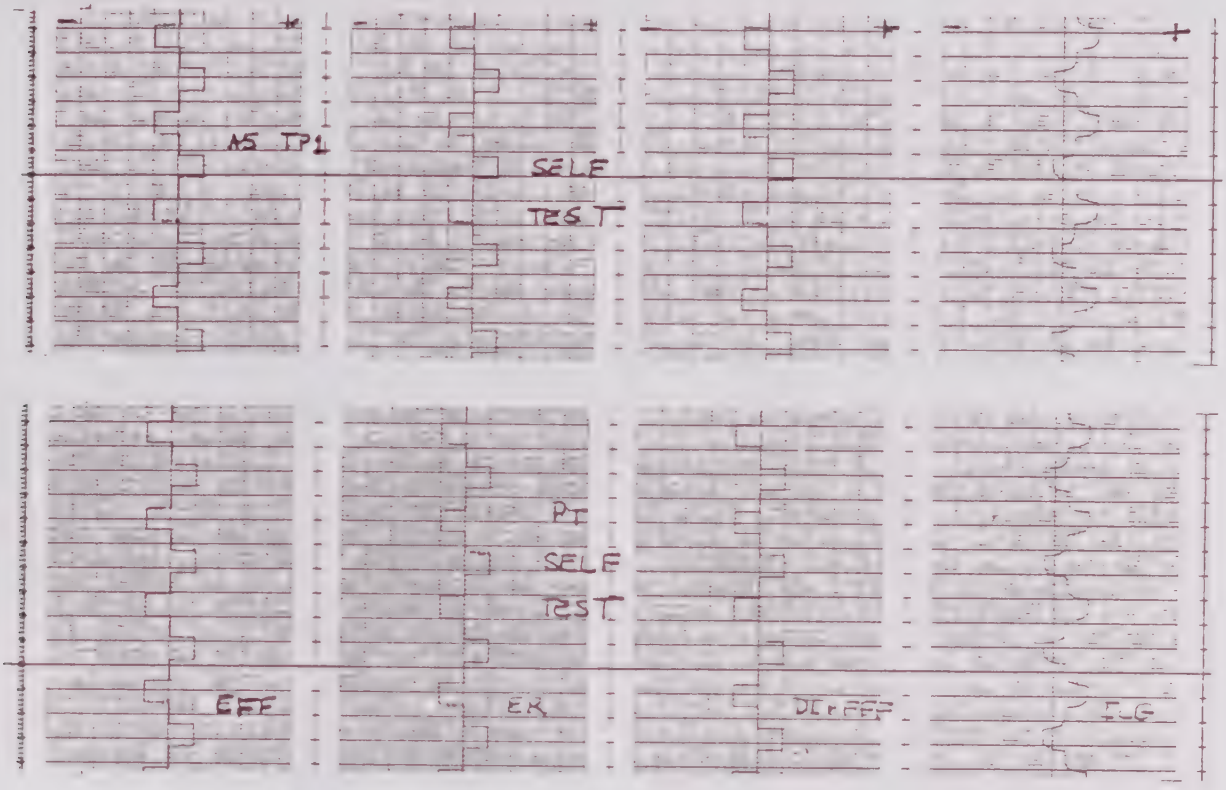
MS TP1
SELF
TEST
PI
SELF
TEST
EFF
EK
DIFFF
FLG

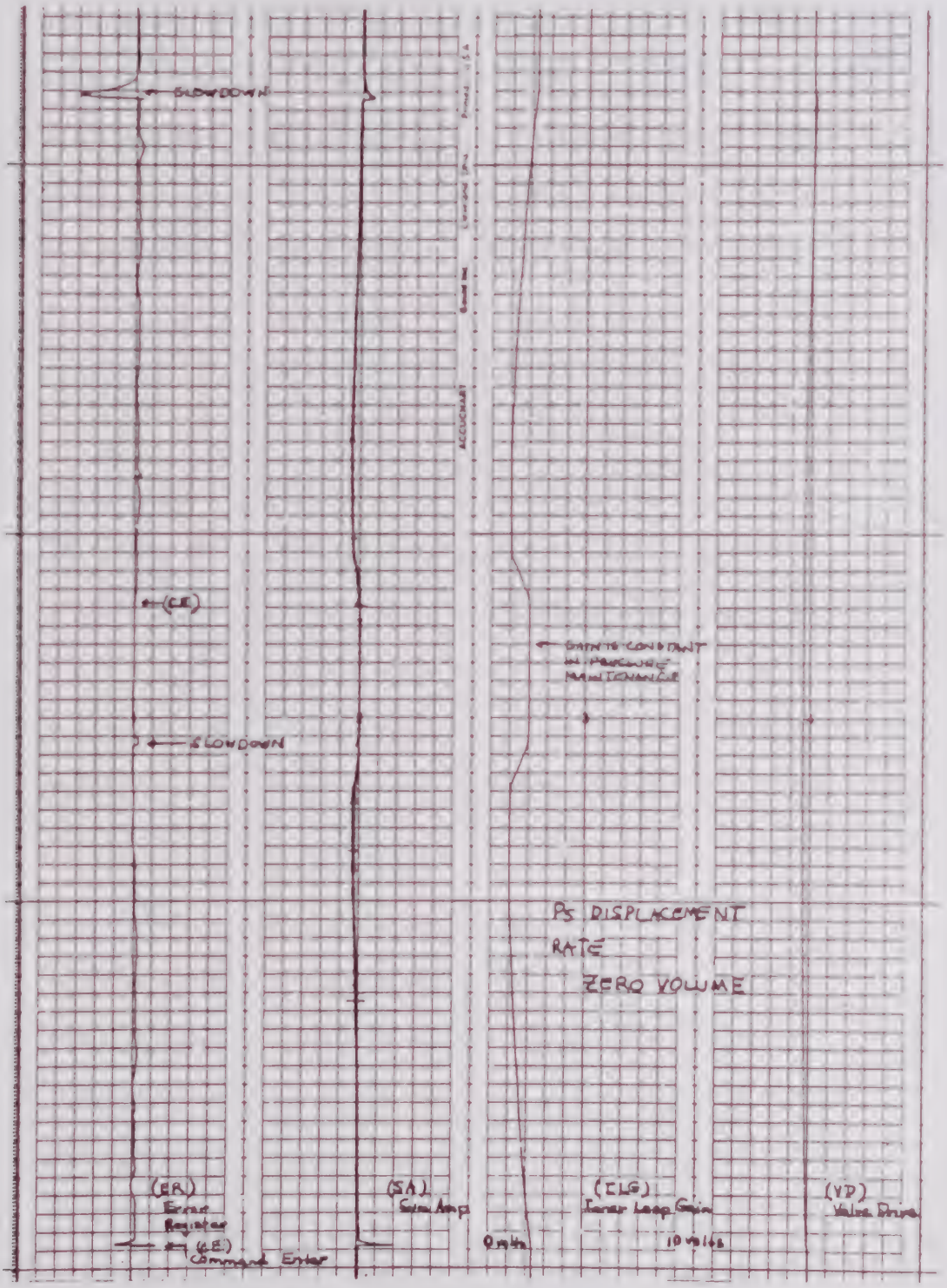
SLOWDOWN
(CE)
GAIN TO CONSTANT
IS LOWDOWN
Ps DISPLACEMENT
RATE
ZERO VOLUME
(ER)
Error
Register
(CE)
Command Enter
(SA)
Servo Amps
(ILG)
Inner Loop Gain
(VD)
Valve Drive

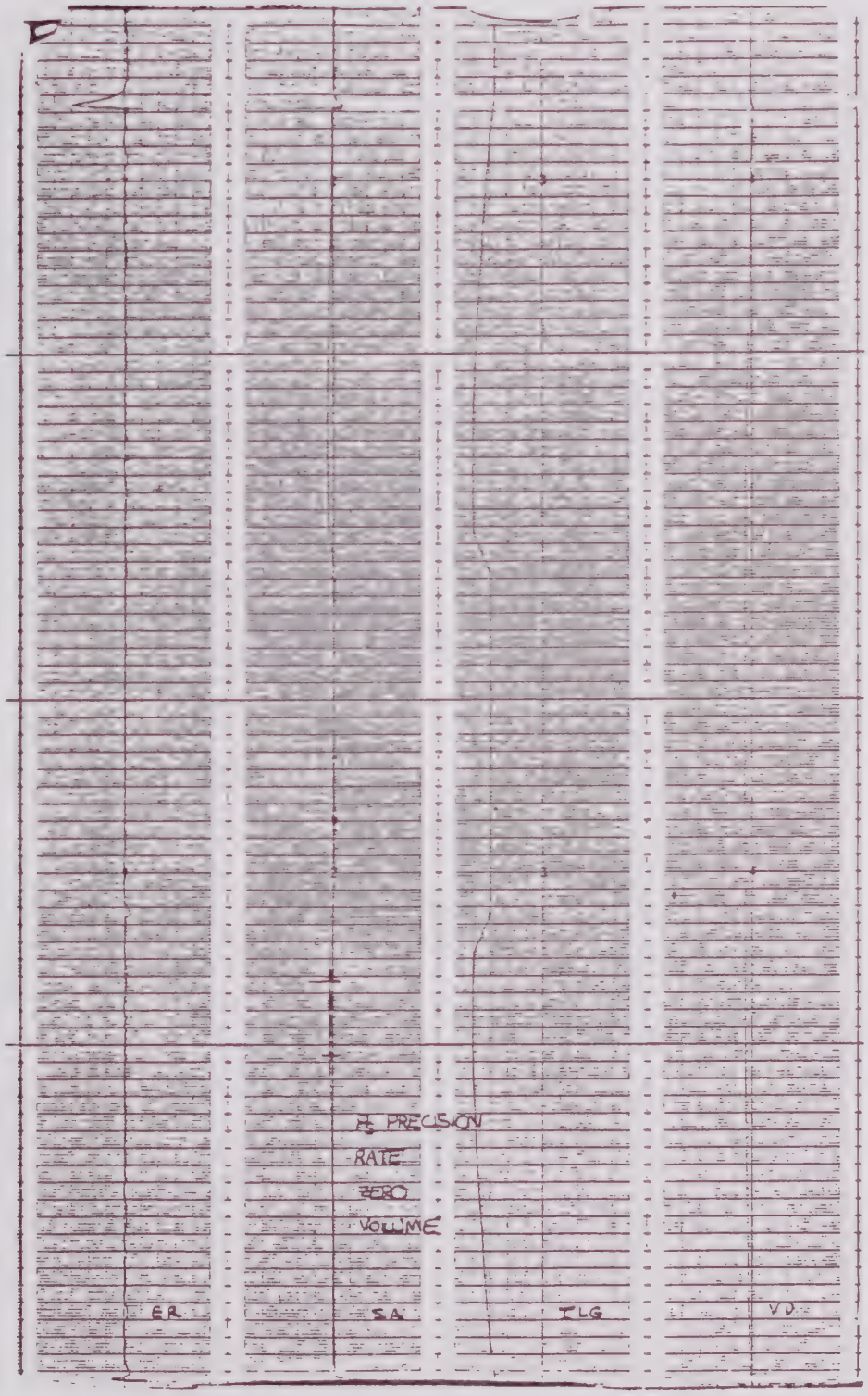
D
PRECISION
RATE
ZERO
VOLUME
ER
SA
TLG
VD

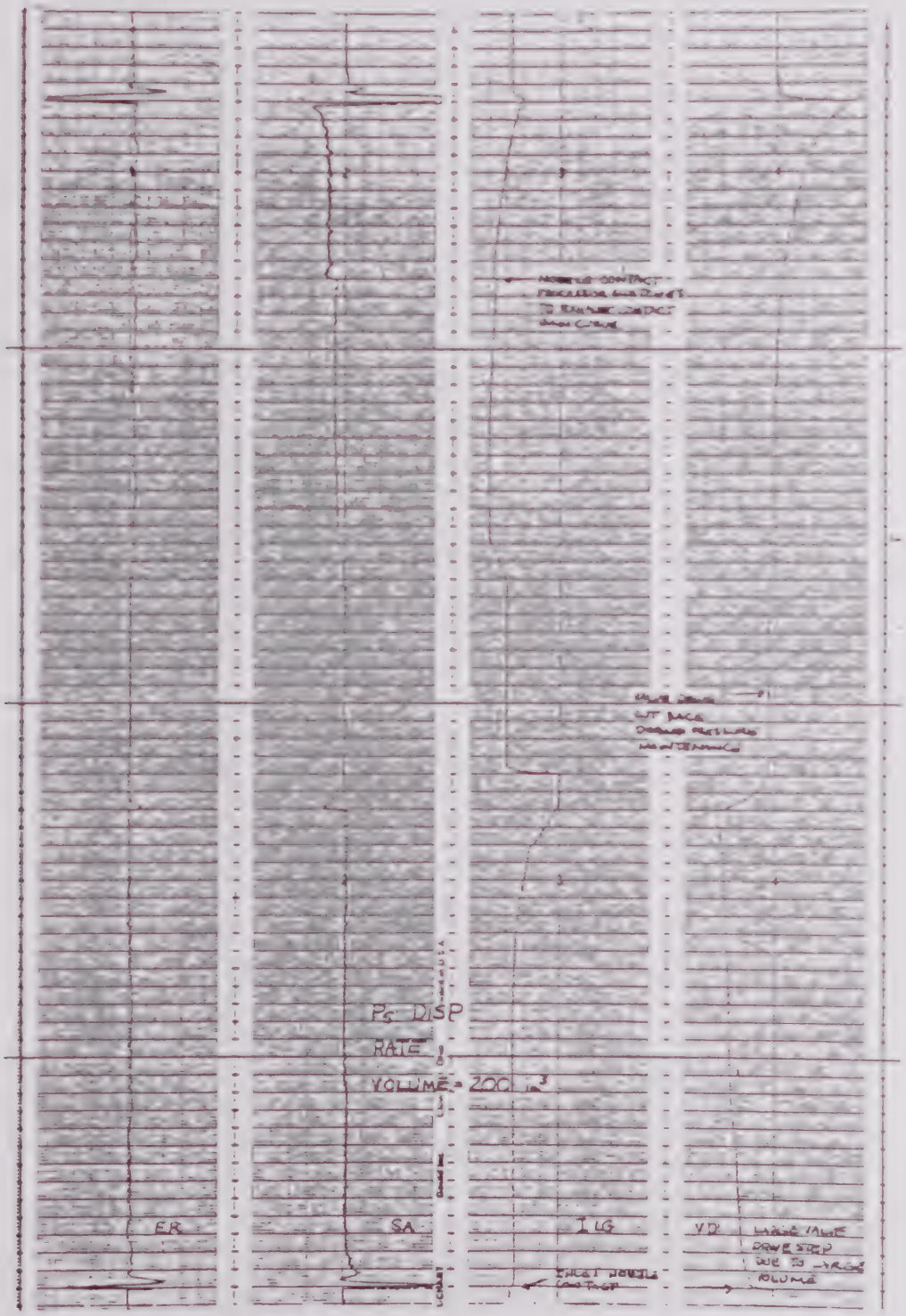
Ps DISP
RATE
VOLUME
ER
SA
I LG
VD

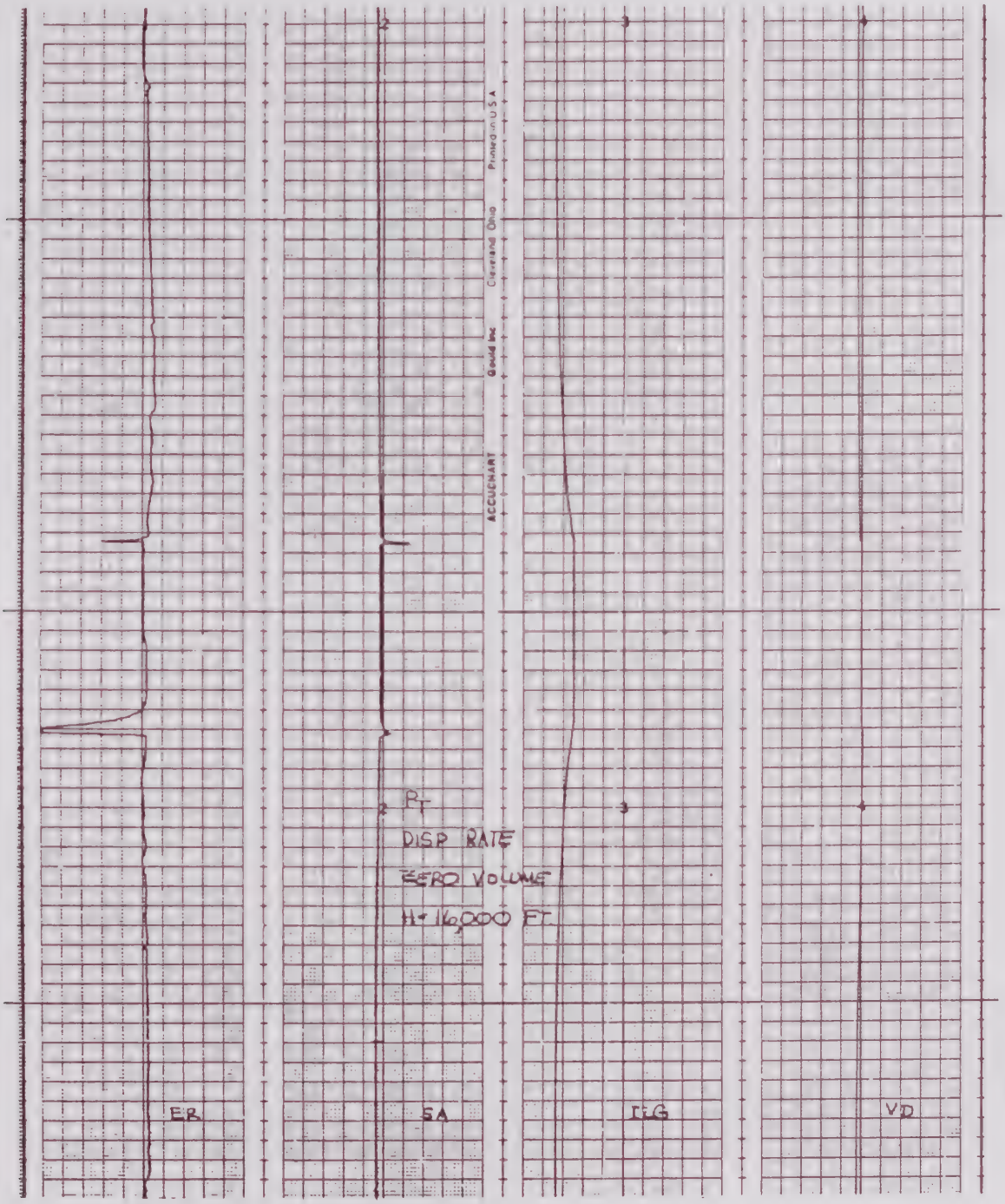
ACCUCHART
Gould Inc
Cleveland Ohio
Printed in U.S.A.
RT
DISP RATE
ZERO VOLUME
H=16,000 FT
EB
SA
IG
VD

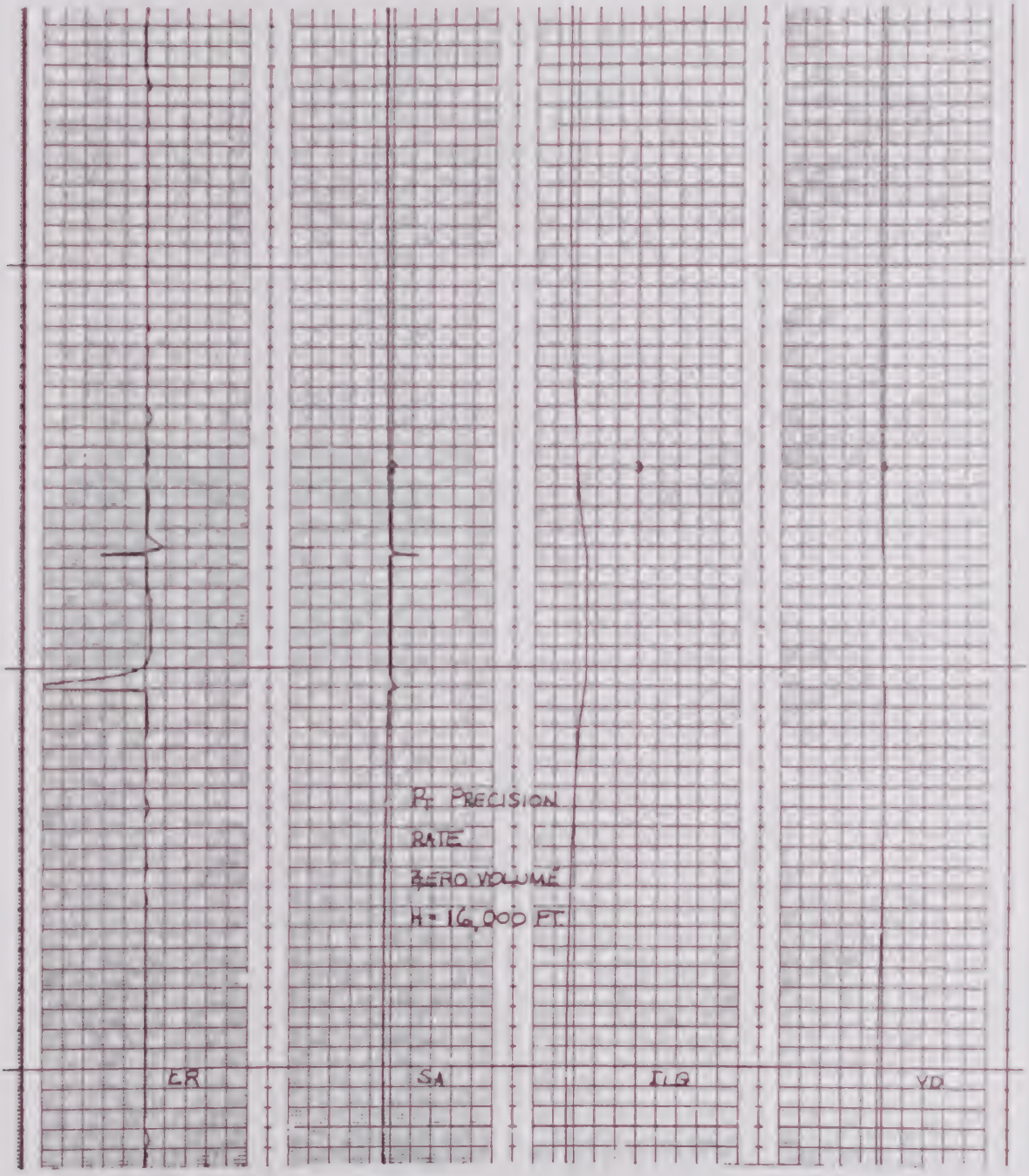
P: PRECISION
RATE
ZERO VOLUME
H = 16,000 FT
ER
SA
ILG
YD

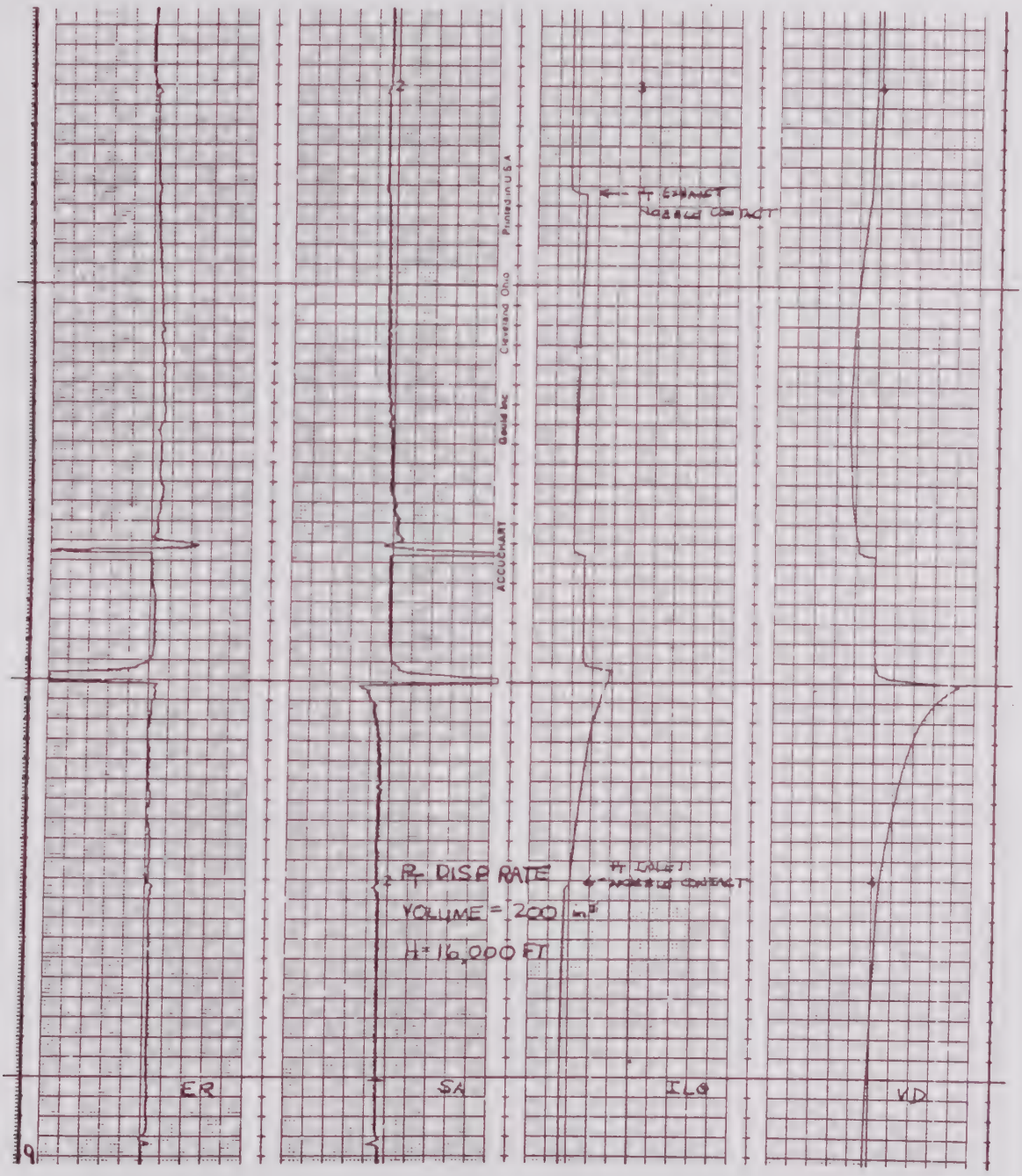
Pt DISP RATE
VOLUME = 200 in³
H = 16,000 FT
ER
SA
ILG
VD
ACCUCHART
Printed in U.S.A.

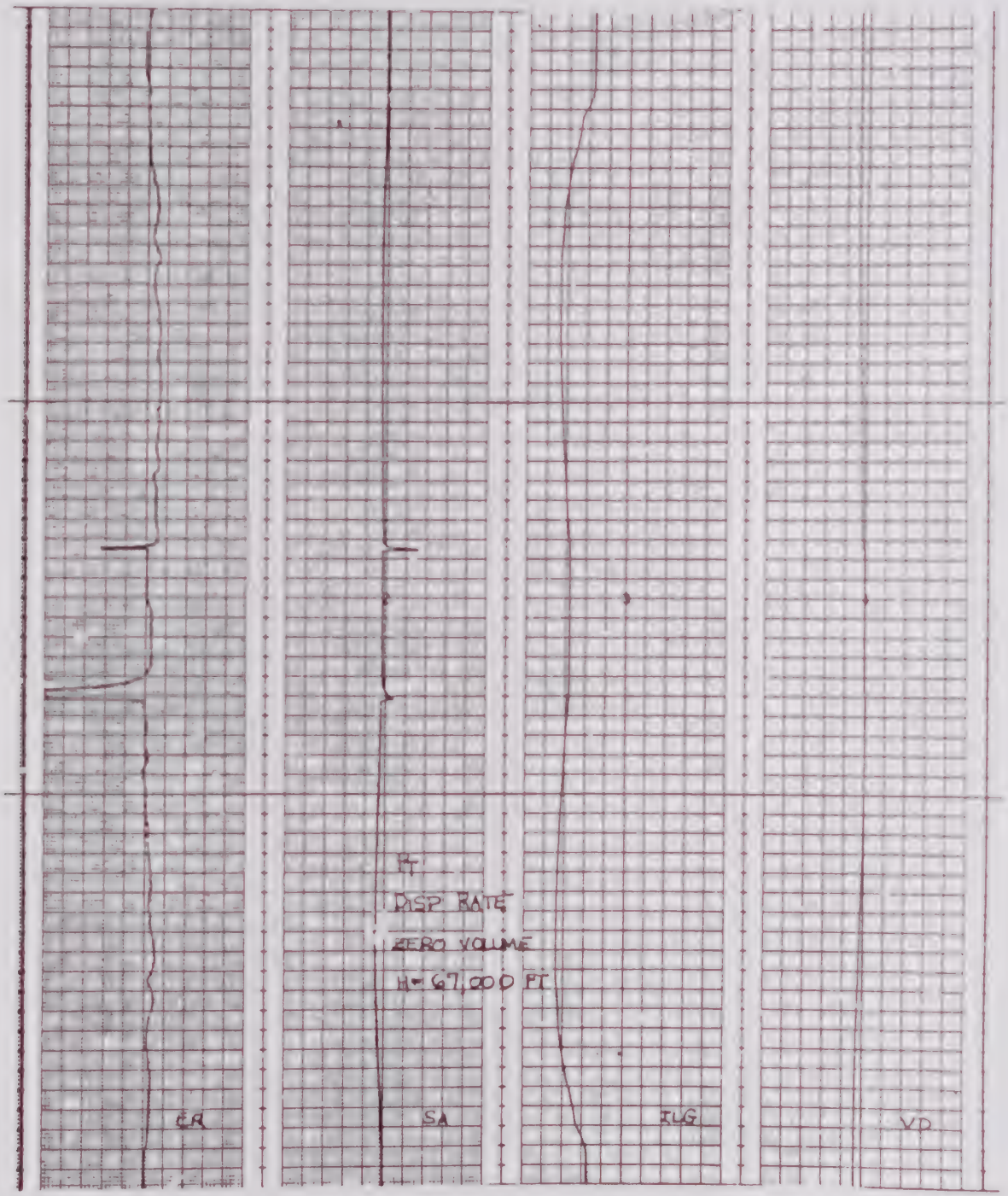
FT
DISP RATE
ZERO VOLUME
H=67,000 FT
ER
SA
RLG
VD

PRECISION
RATE
ZERO VOLUME
H= 67,000 FT
ER
SA
TLG
VD
ACCUCHART

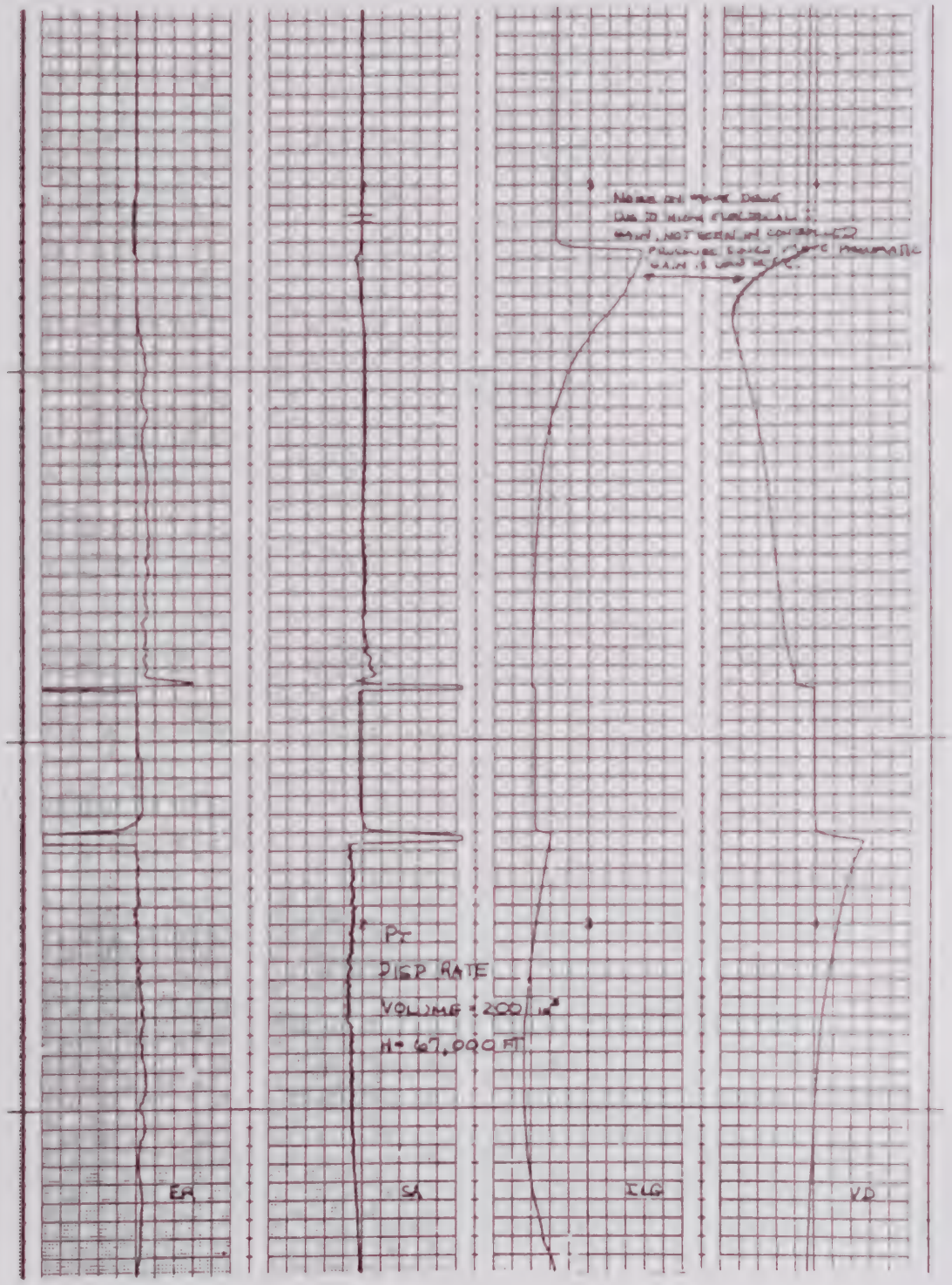
Pc
DISP RATE
VOLUME = 200 in³
H = 67,000 FT
ER
SA
ELG
VD

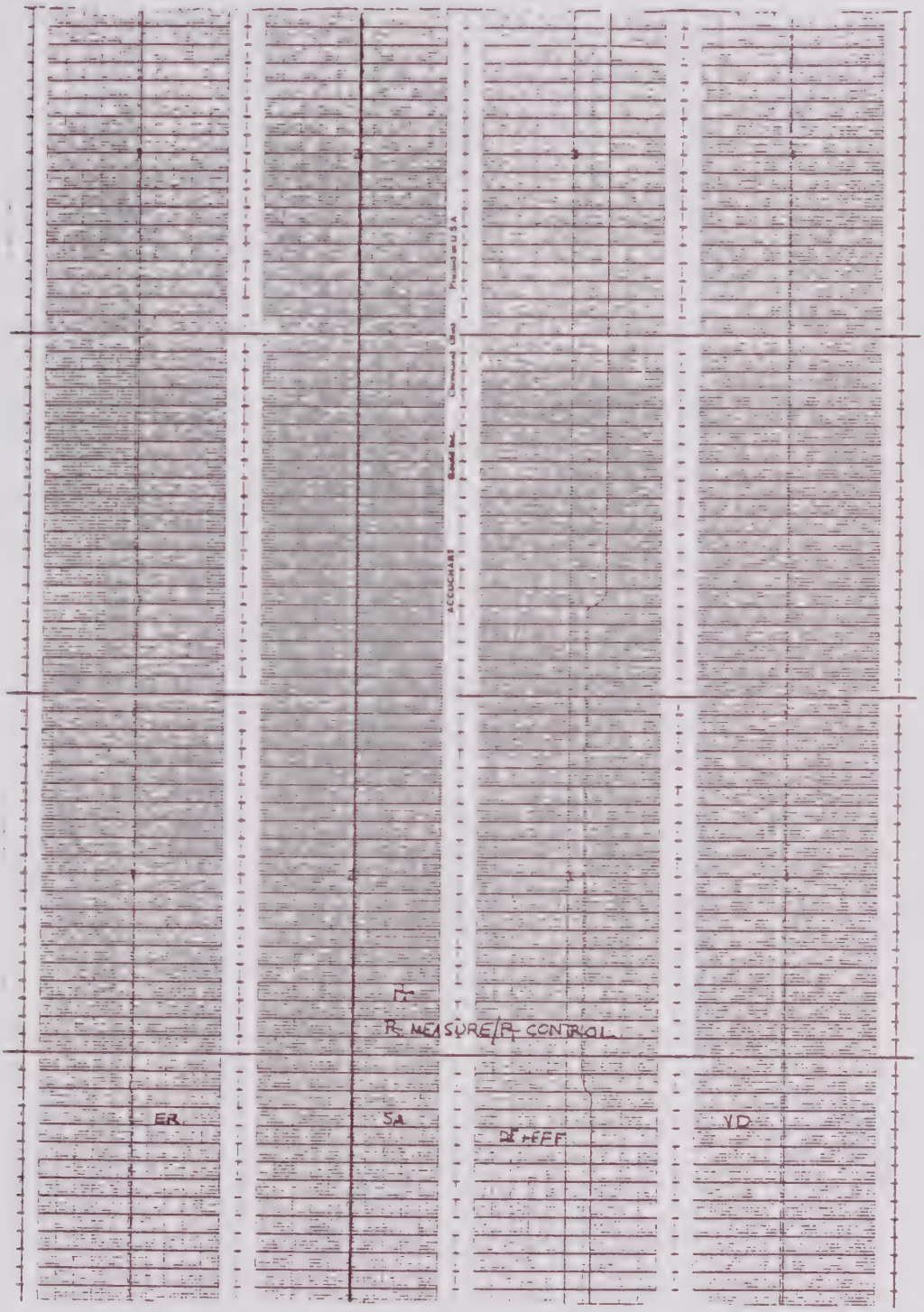
ACCUCHART
Printed in U.S.A.
Bendix Inc. Corrected Grad
PR MEASURE/PR CONTROL
ER
SA
DF+FFF
VD

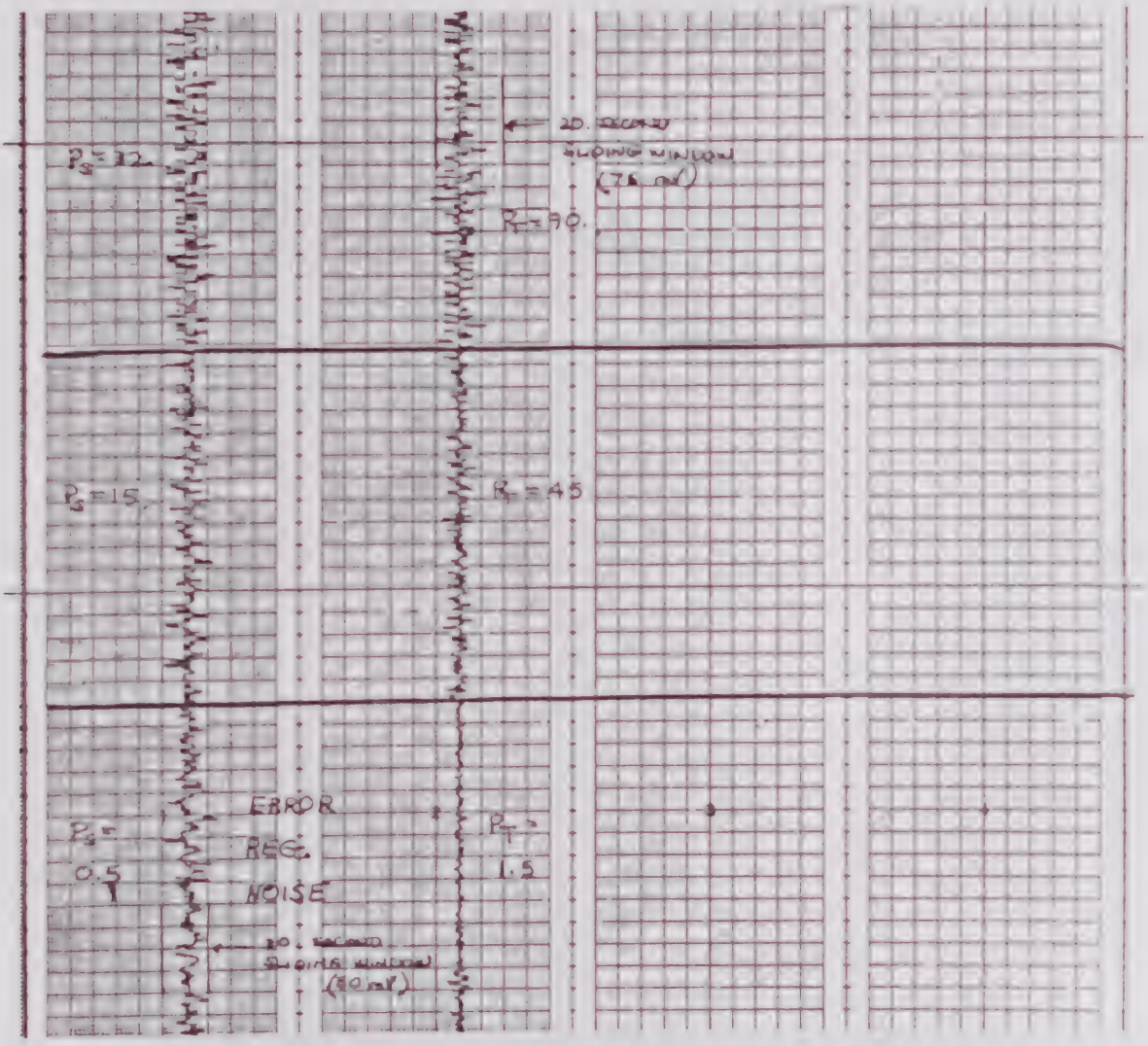
20. SECOND
SLIDING WINDOW
(75 mV)
P_S=32
R_T=90.
P_S=15
R_T=45
ERROR
REG.
NOISE
P_S=
0.5
P_T=
1.5
20. SECOND
SLIDING WINDOW
(50 mV)

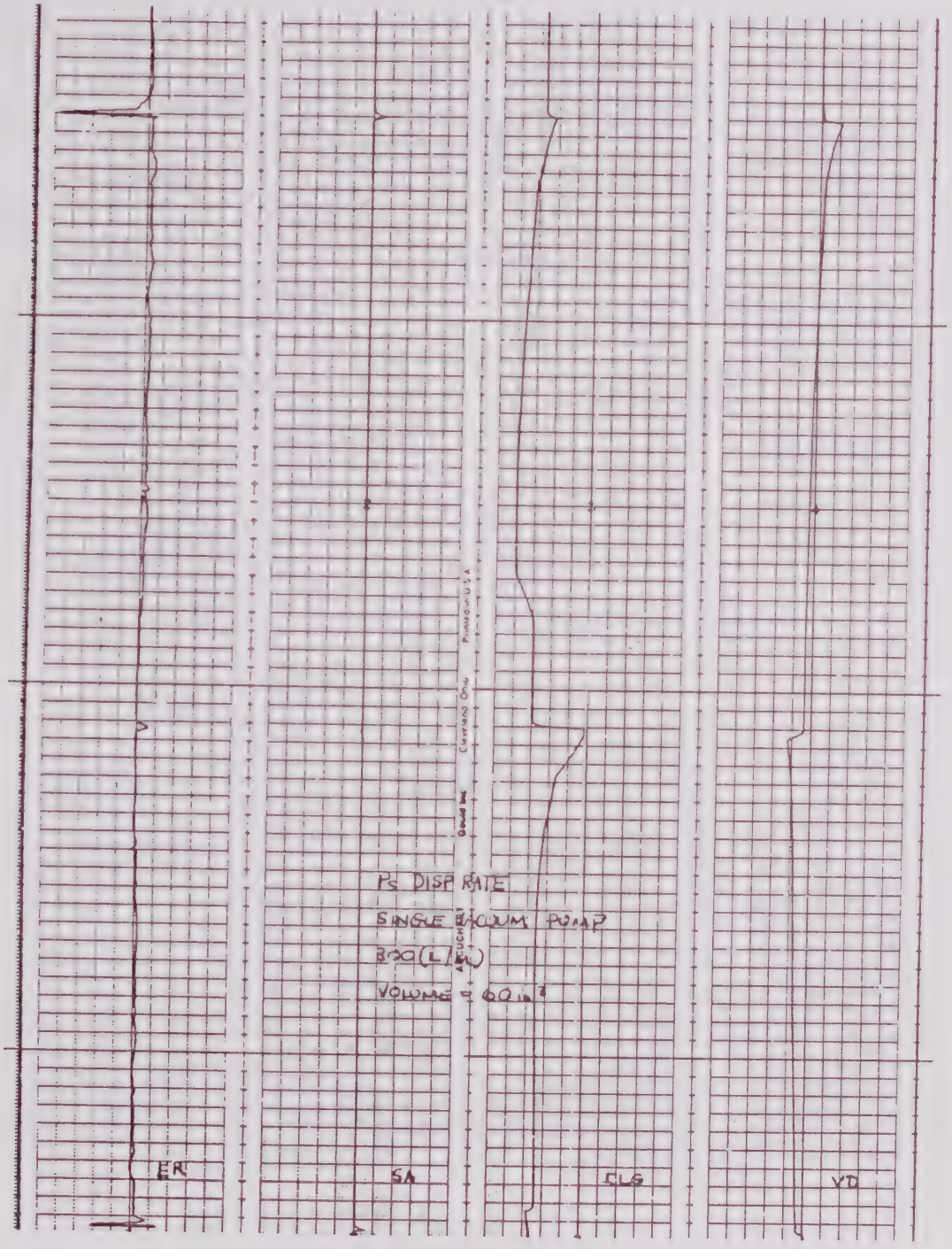
Ps DISP RATE
SINGLE VACUUM PUMP
800(L/MIN)
VOLUME = 60 in³
ER
SA
CLG
VD

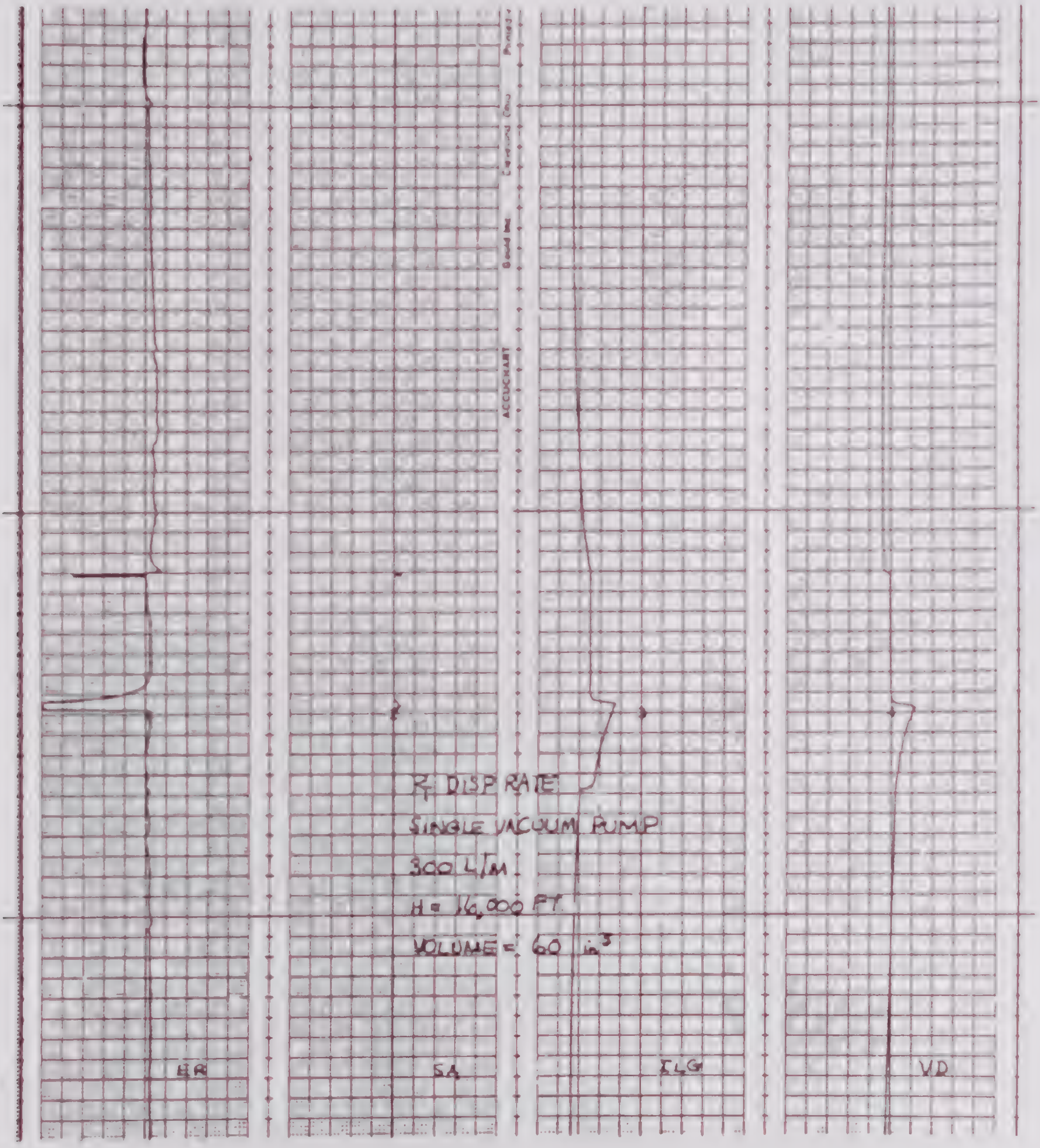
R DISP RATE
SINGLE VACUUM PUMP
300 L/M
H = 16,000 FT
VOLUME = 60 in³
ER
SA
VD
ACCUCHART

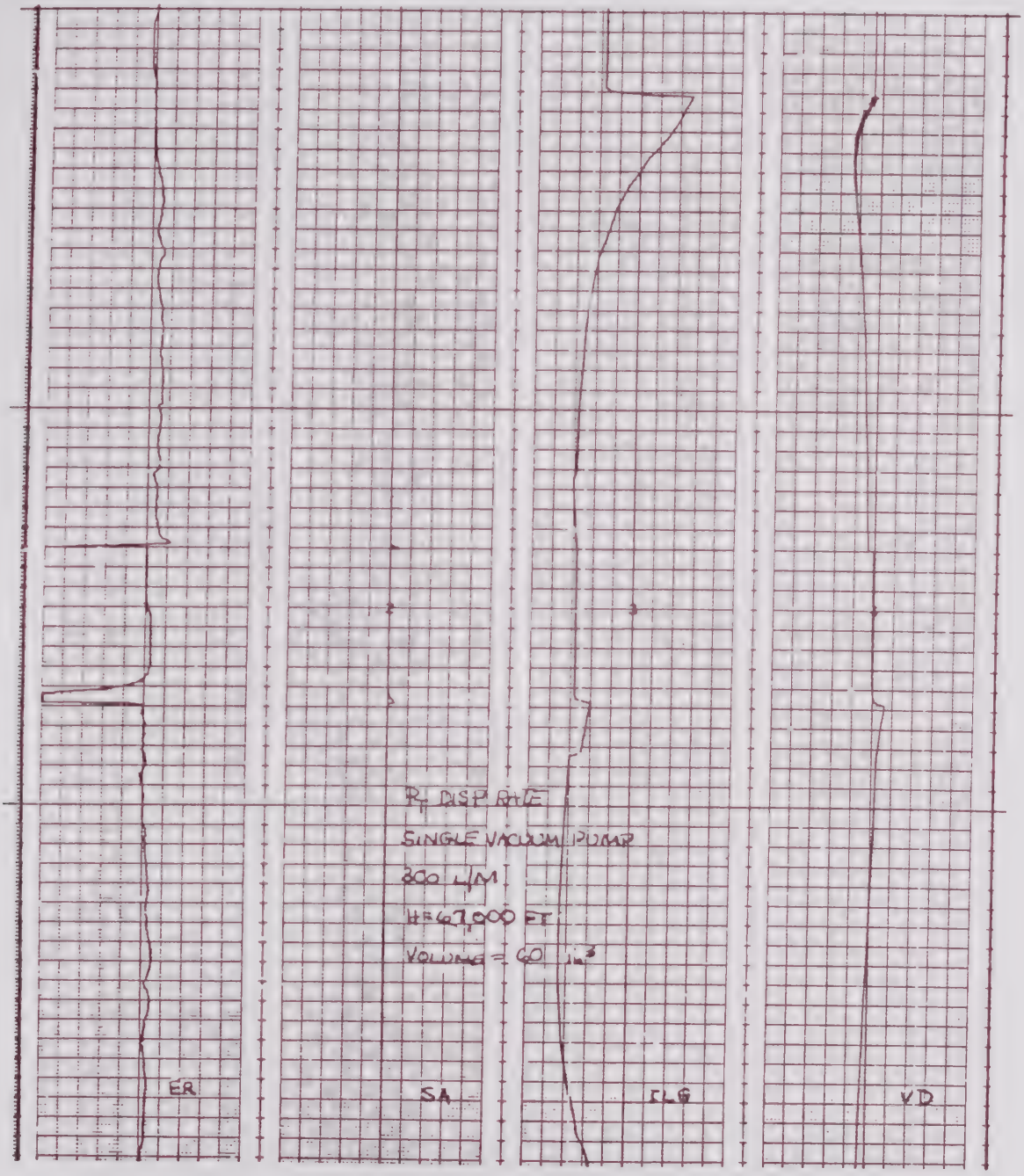
R DISP RATE
SINGLE VACUUM PUMP
800 L/M
H=67,000 FT
VOLUME = 60 IN³
ER
SA
RLG
VD

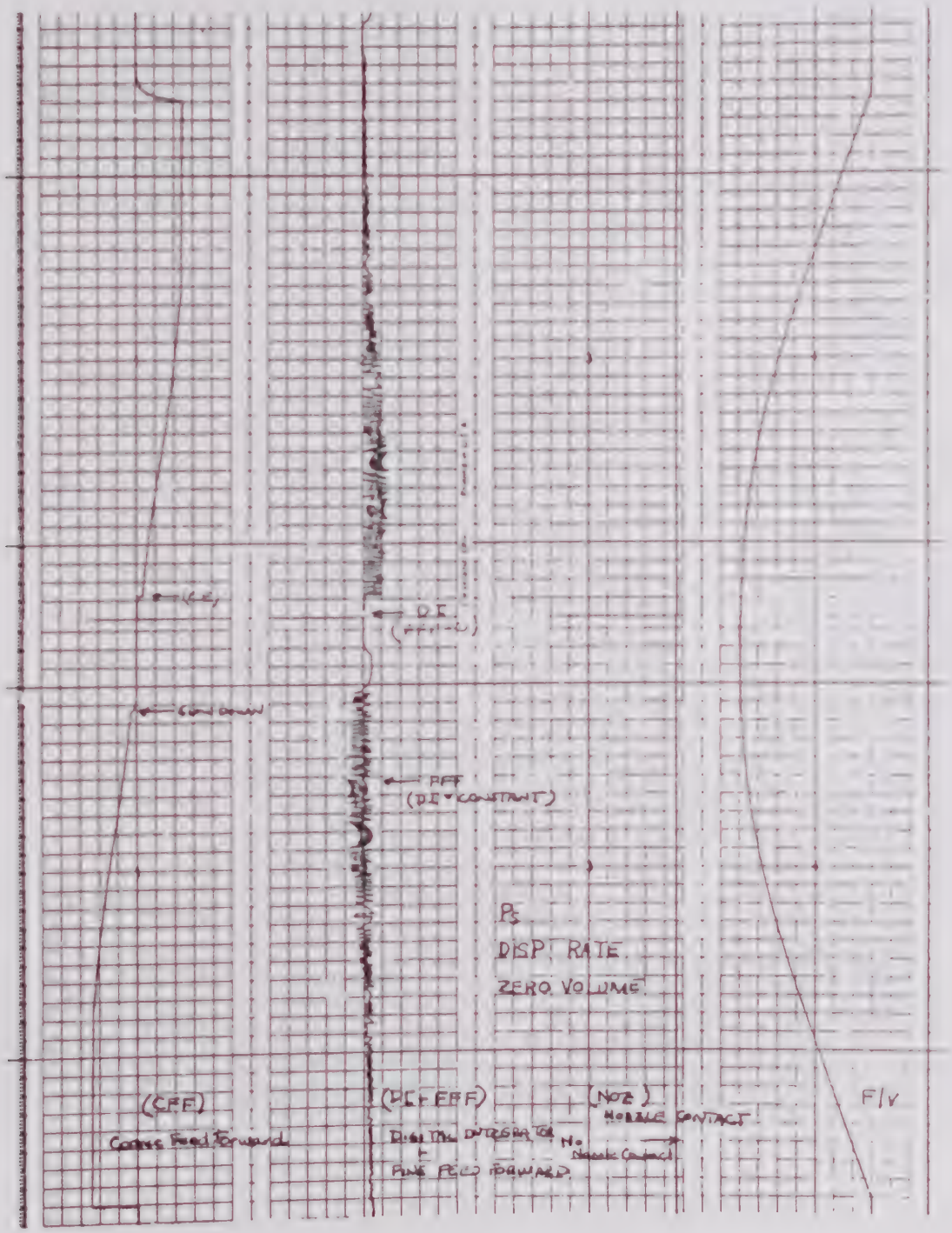
DI
FFF
(DI + CONSTANT)
Ps
DISP. RATE
ZERO VOLUME
(CFF)
Coarse Feed Forward
(DI + FFF)
(NOZ)
NOZZLE CONTACT
F/V

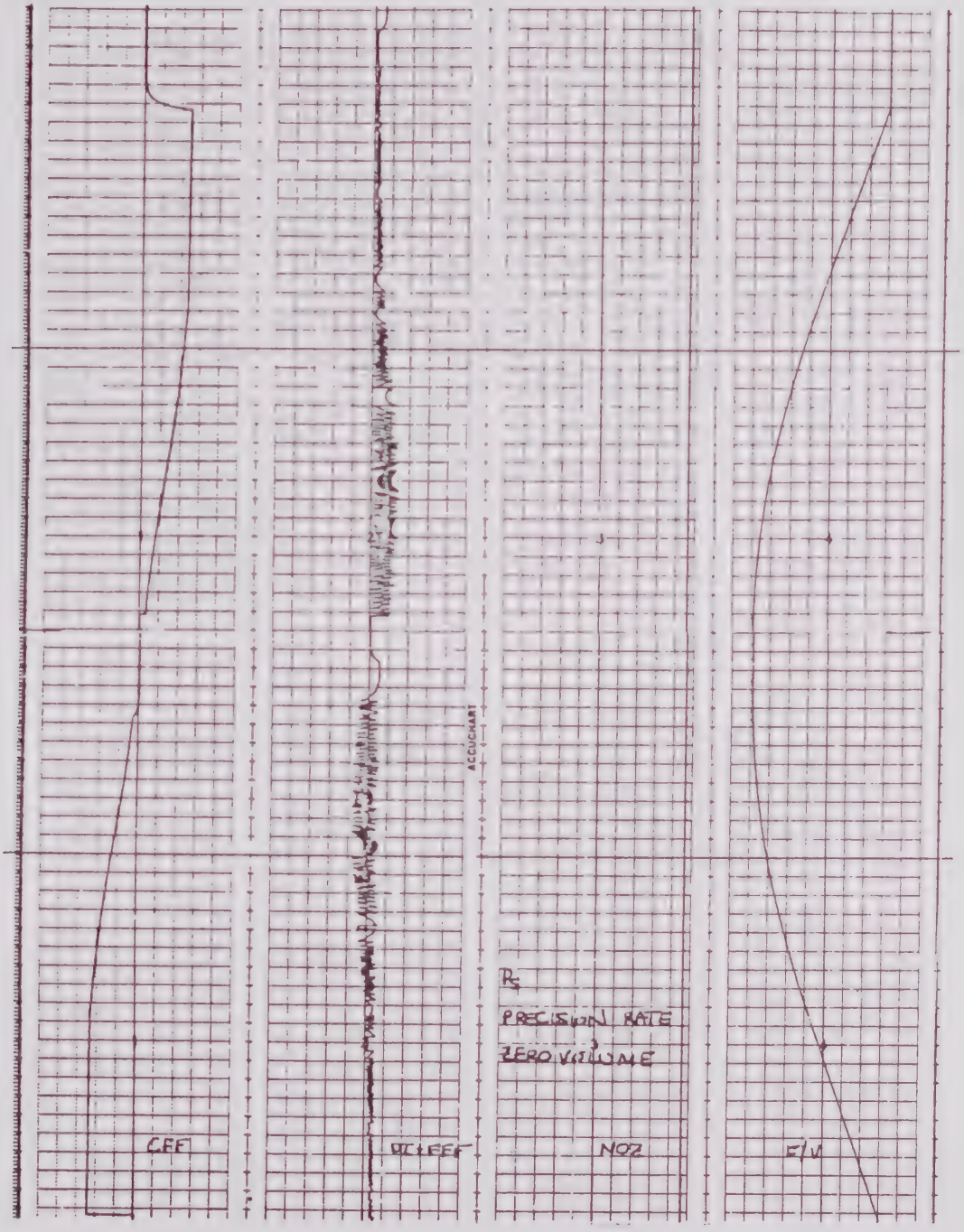
ACCUCHART
PRECISION RATE
ZERO VOLUME
CEF
DIFFEF
NOZ
E/V

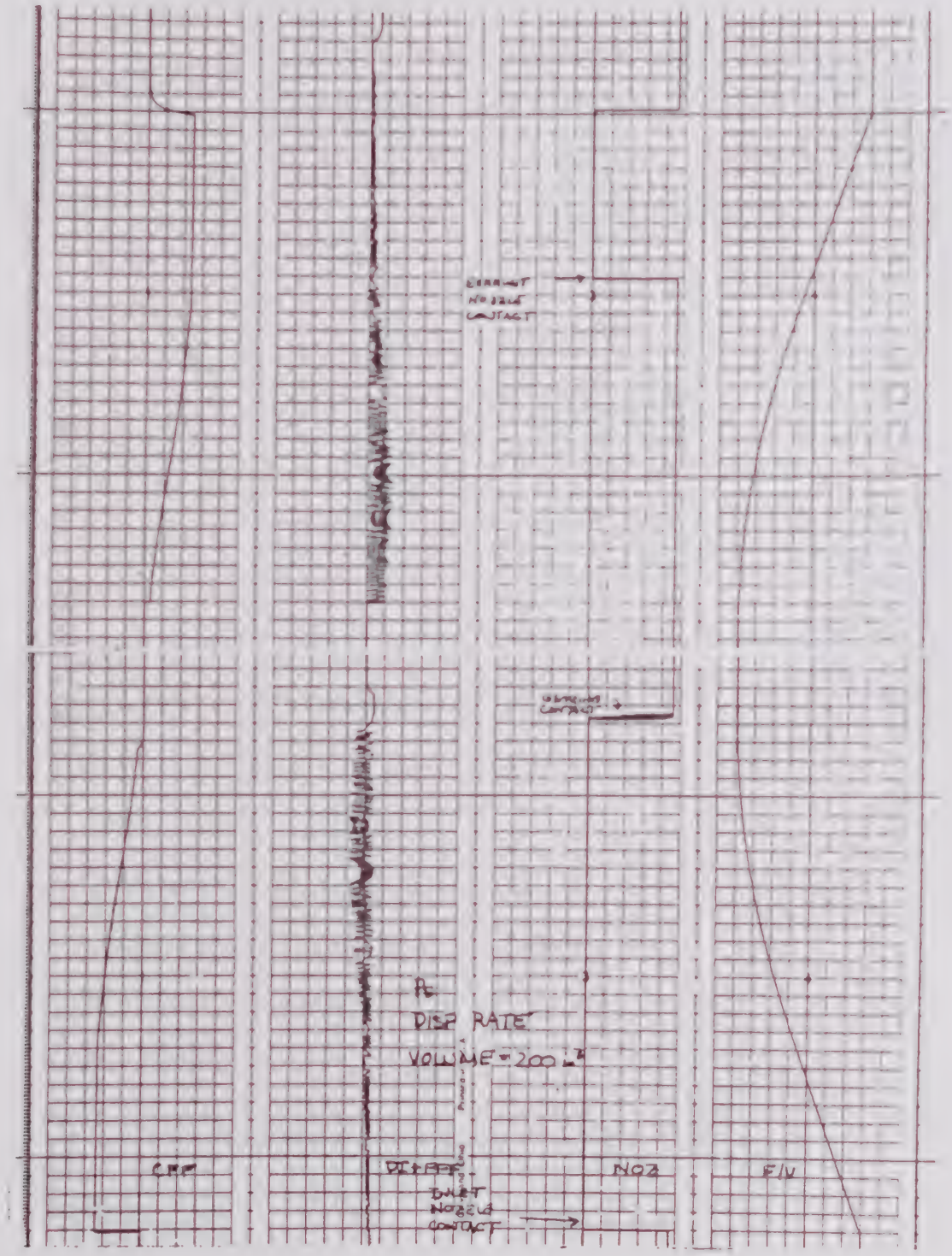
DISP RATE
VOLUME = 200 L
CRP
NOZ
F/V

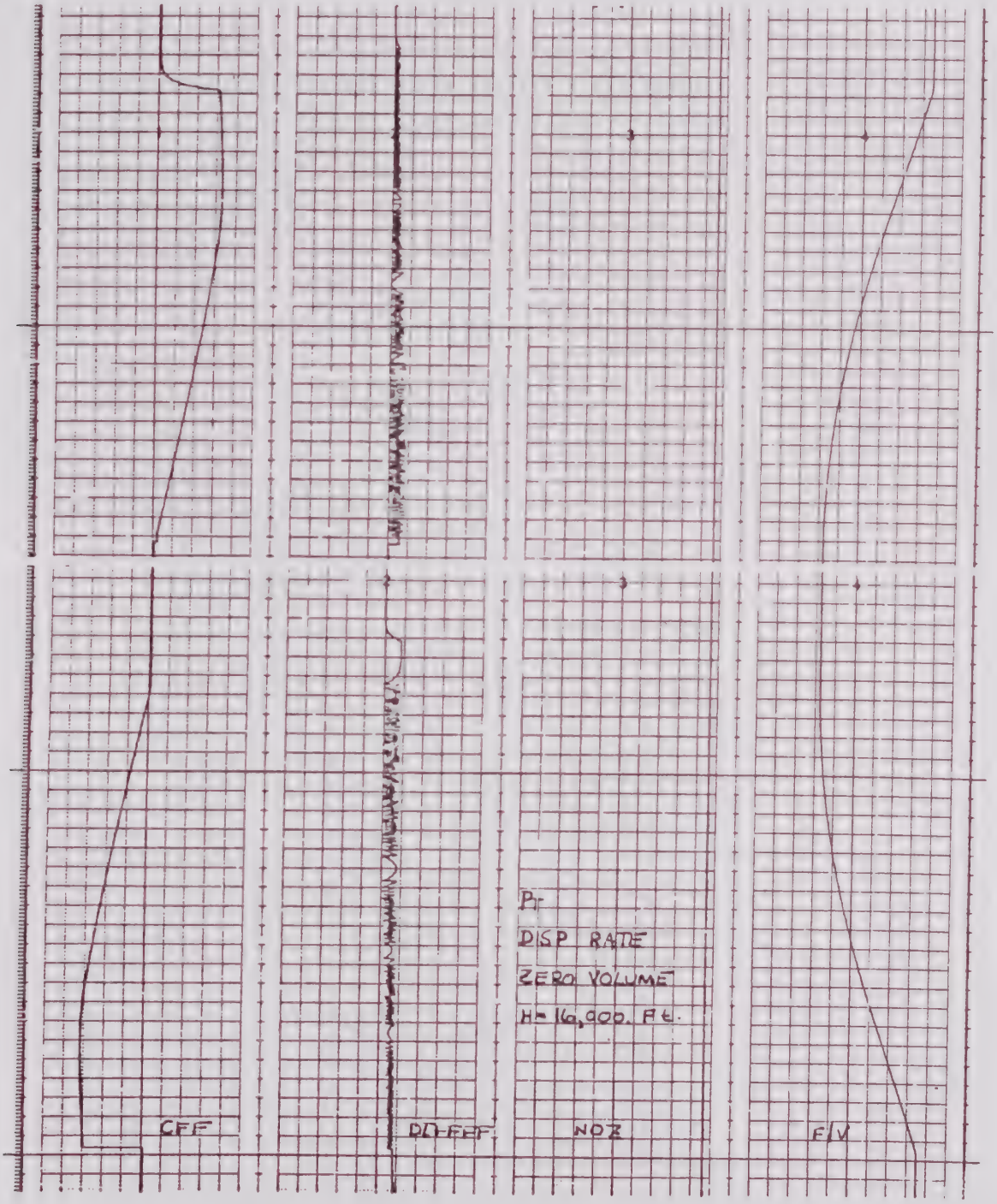
Pr
DISP RATE
ZERO VOLUME
H= 16,900. Ft.
CFF
DIFF
NOZ
E/V

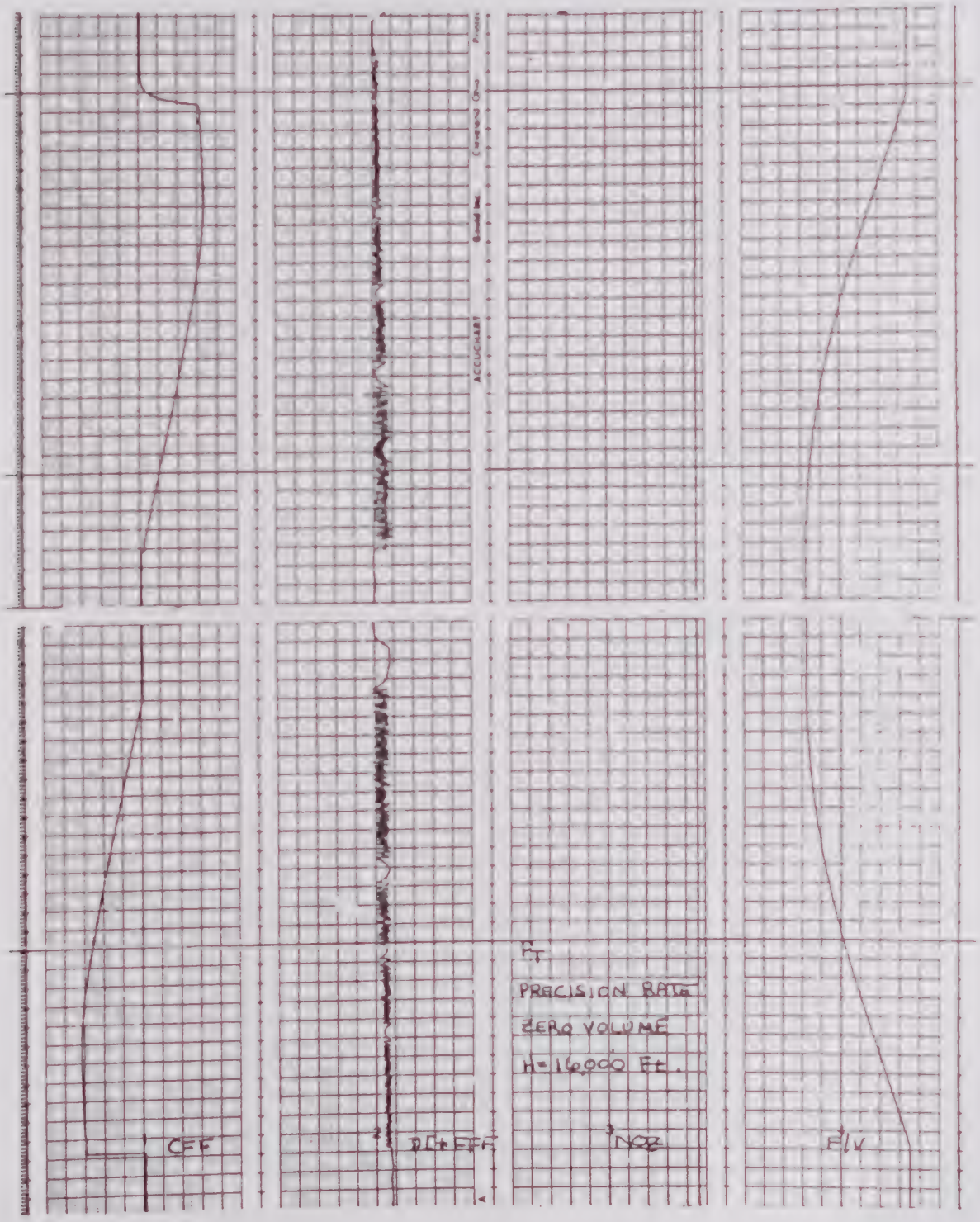

ADT-222B Calibration Procedures
Table 4-17 (cont)

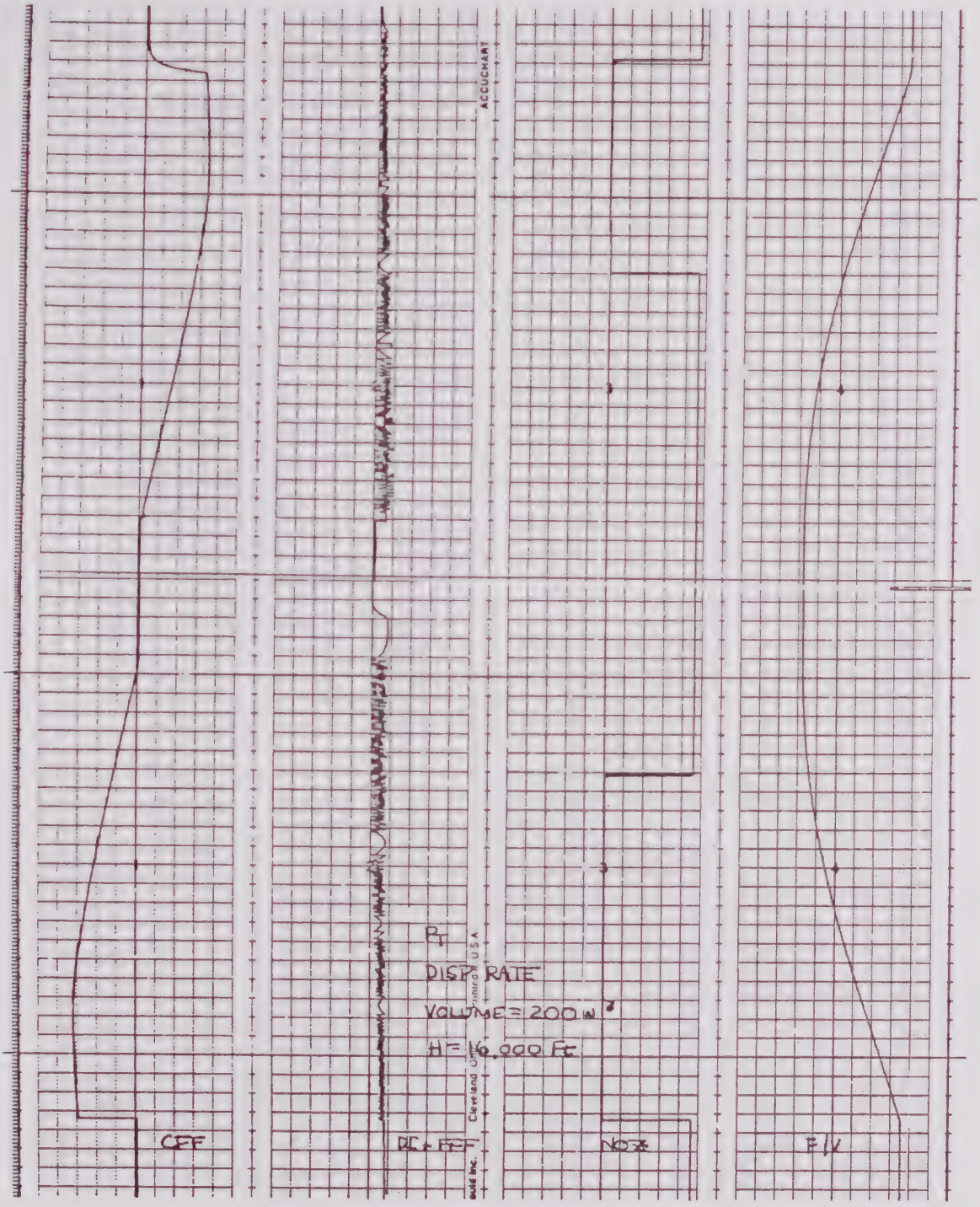
ACCUCHART
PT
DISP RATE
VOLUME = 200 in³
H = 16,000 Ft
CFF
PC + FFF
NOZ
F/V

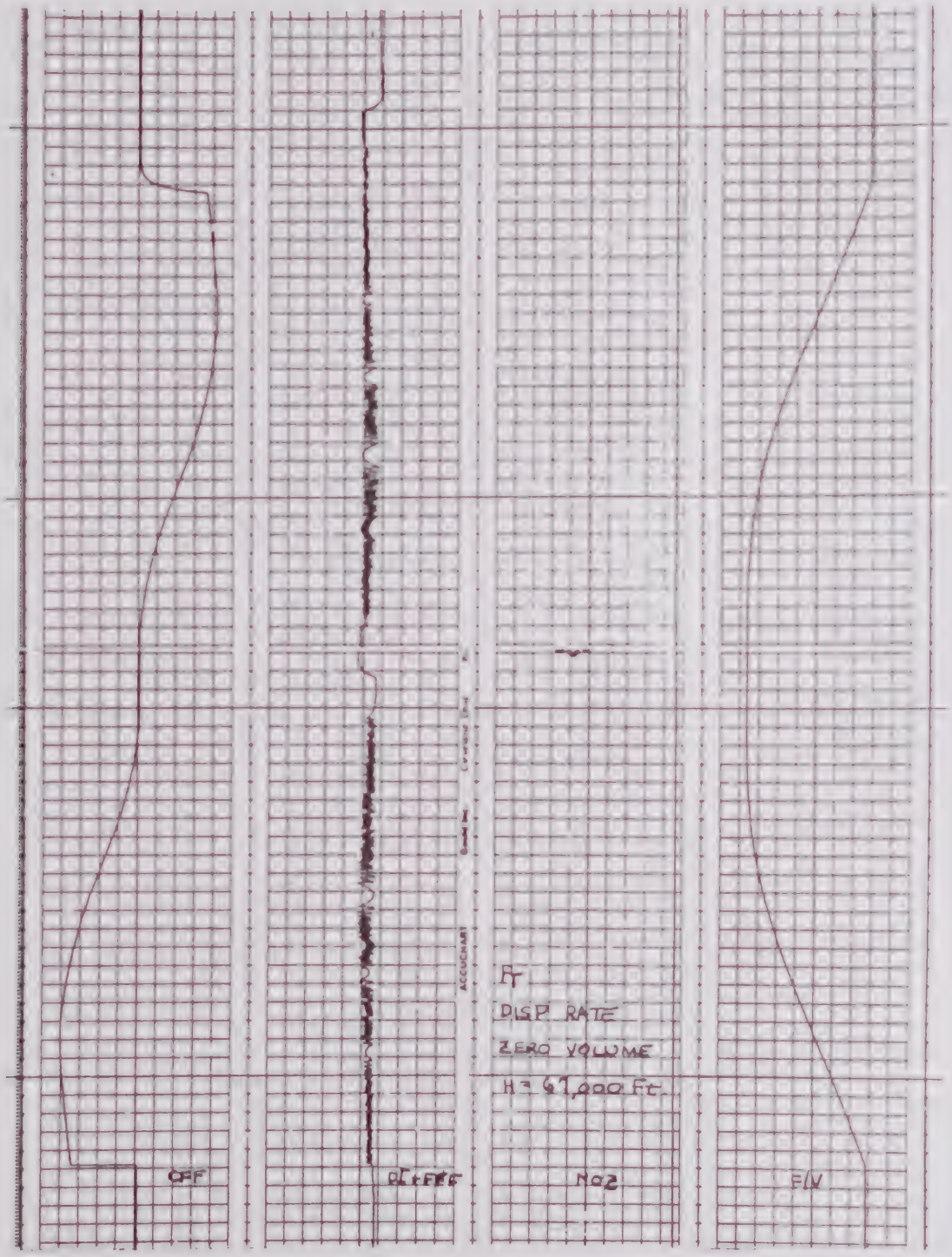

ADT-222B Calibration Procedures
Table 4-17 (cont)

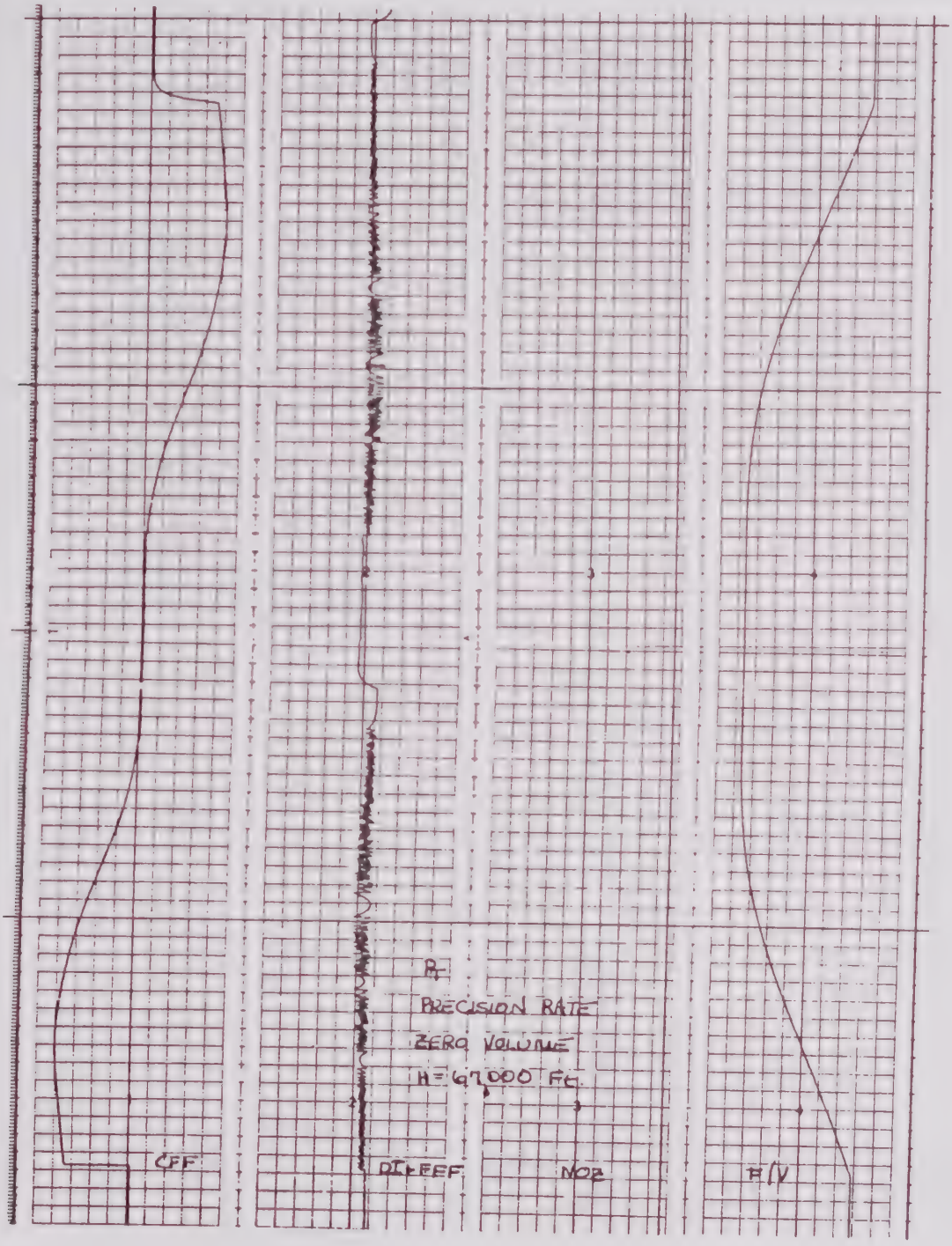
PRECISION RATE
ZERO VOLUME
H=47,000 FT.
CFF
DIFFEF
NOZ
H/V

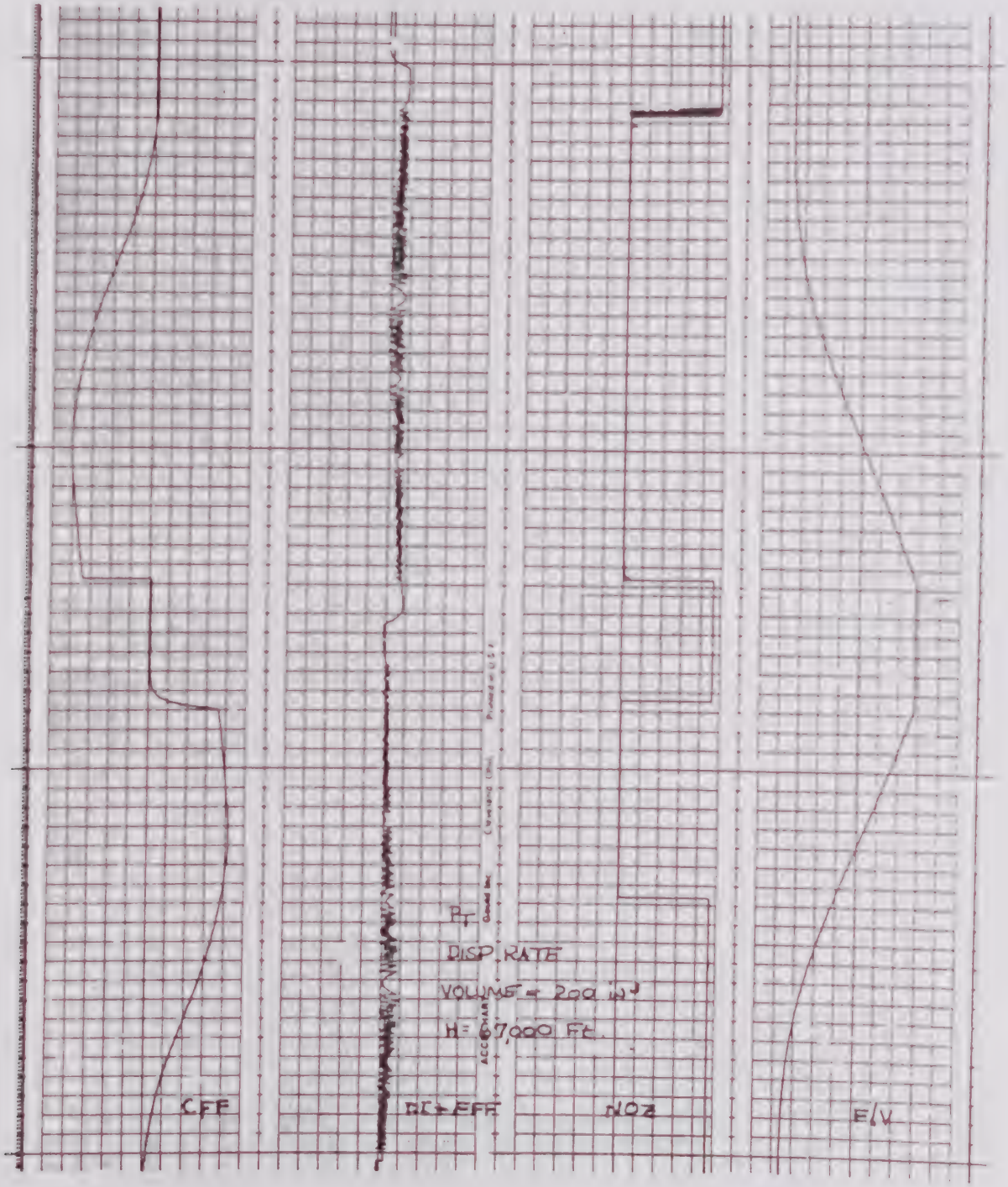

ADT-222B Calibration Procedures
Table 4-17 (cont)

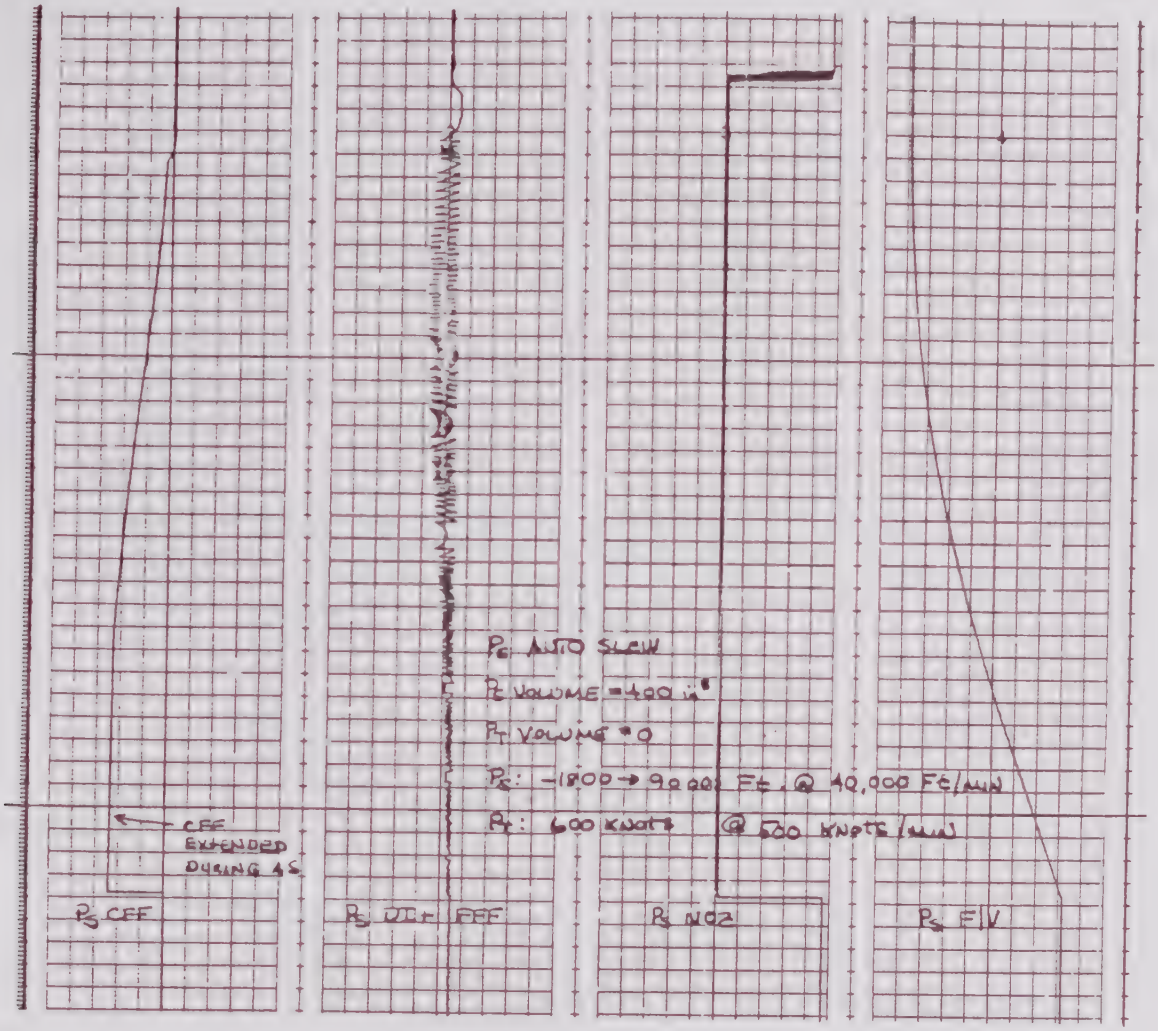
P6: AUTO SLEW
Pt VOLUME = 400 in³
Pt VOLUME = 0
Ps: -1000 → 90,000 Ft. @ 40,000 Ft/MIN
Pt: 600 KNOTS @ 500 KNOTS/MIN
CEF EXTENDED DURING AS
Ps CEF
Ps DIFF
Ps NOZ
Ps E/V

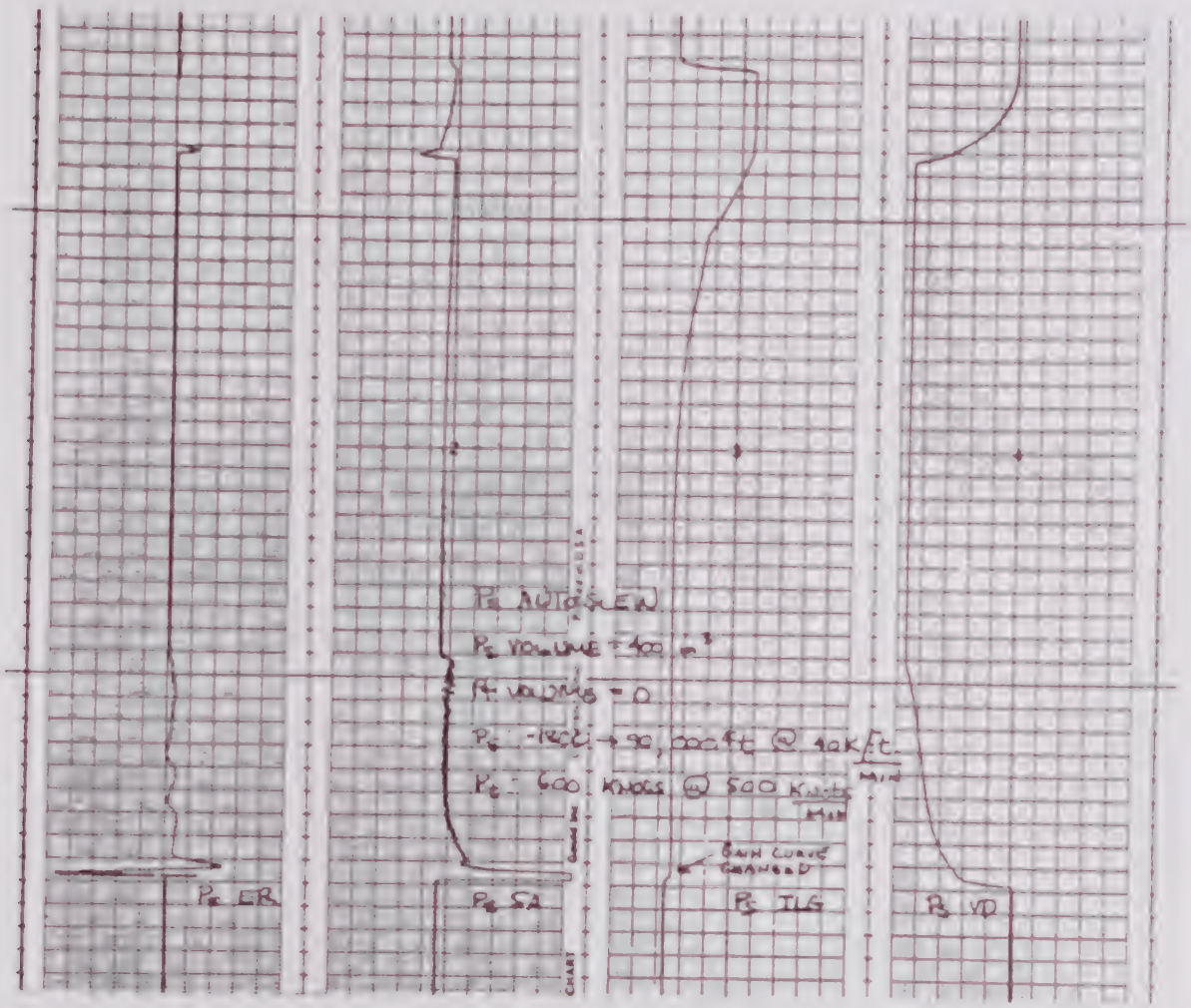
P2 AUTOSLEW
P2 VOLUME = 400 in³
P2 VOLUME = 0
P2 -1500 → 90,000 ft @ 10K ft/min
P2 = 600 KNOTS @ 500 Kn-ts/min
BANK CURVE CHANGED
P2 ER
P2 SA
P2 ILG
P2 VD
CHART

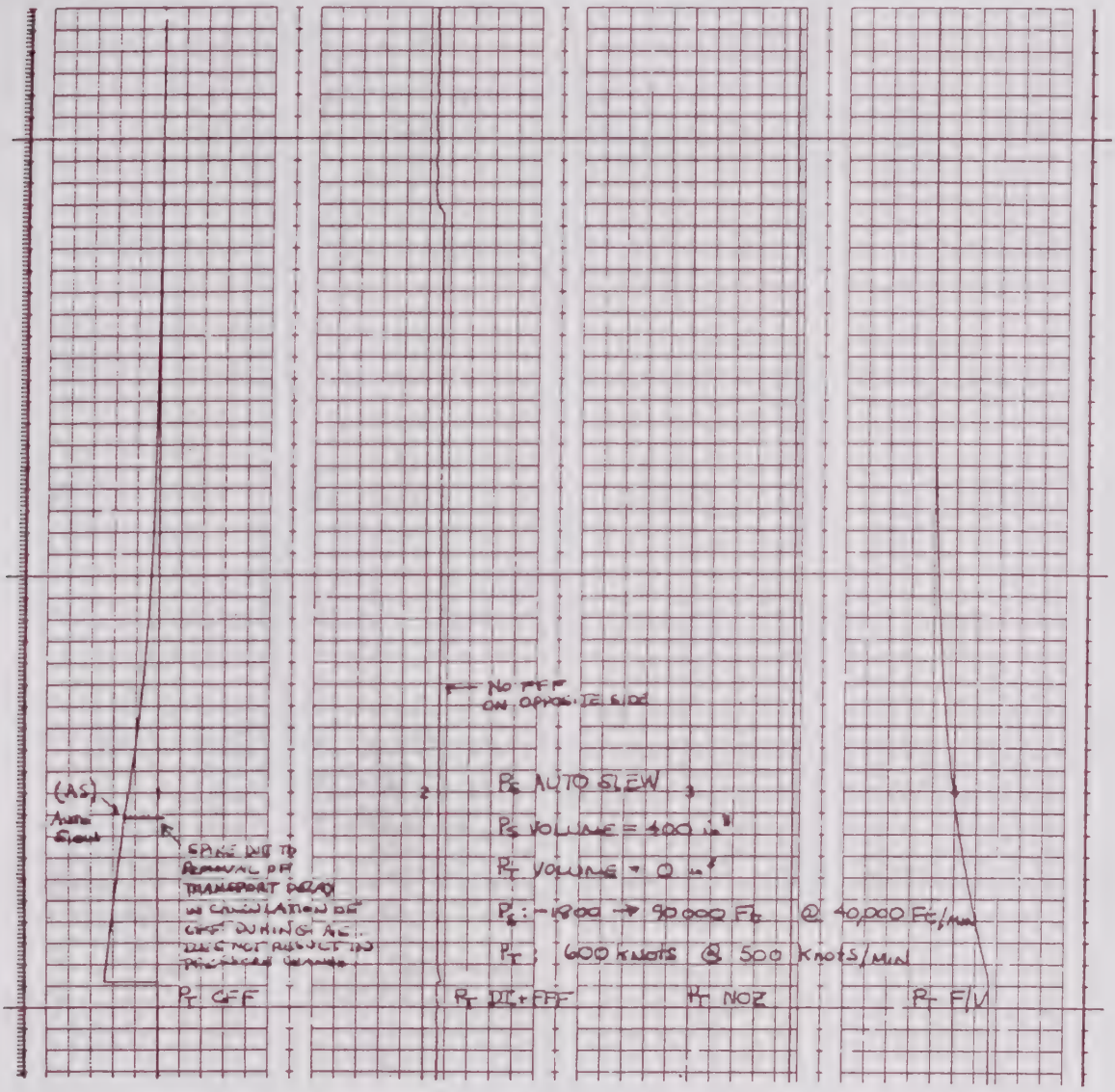

ADT-222B Calibration Procedures
Table 4-17 (cont)

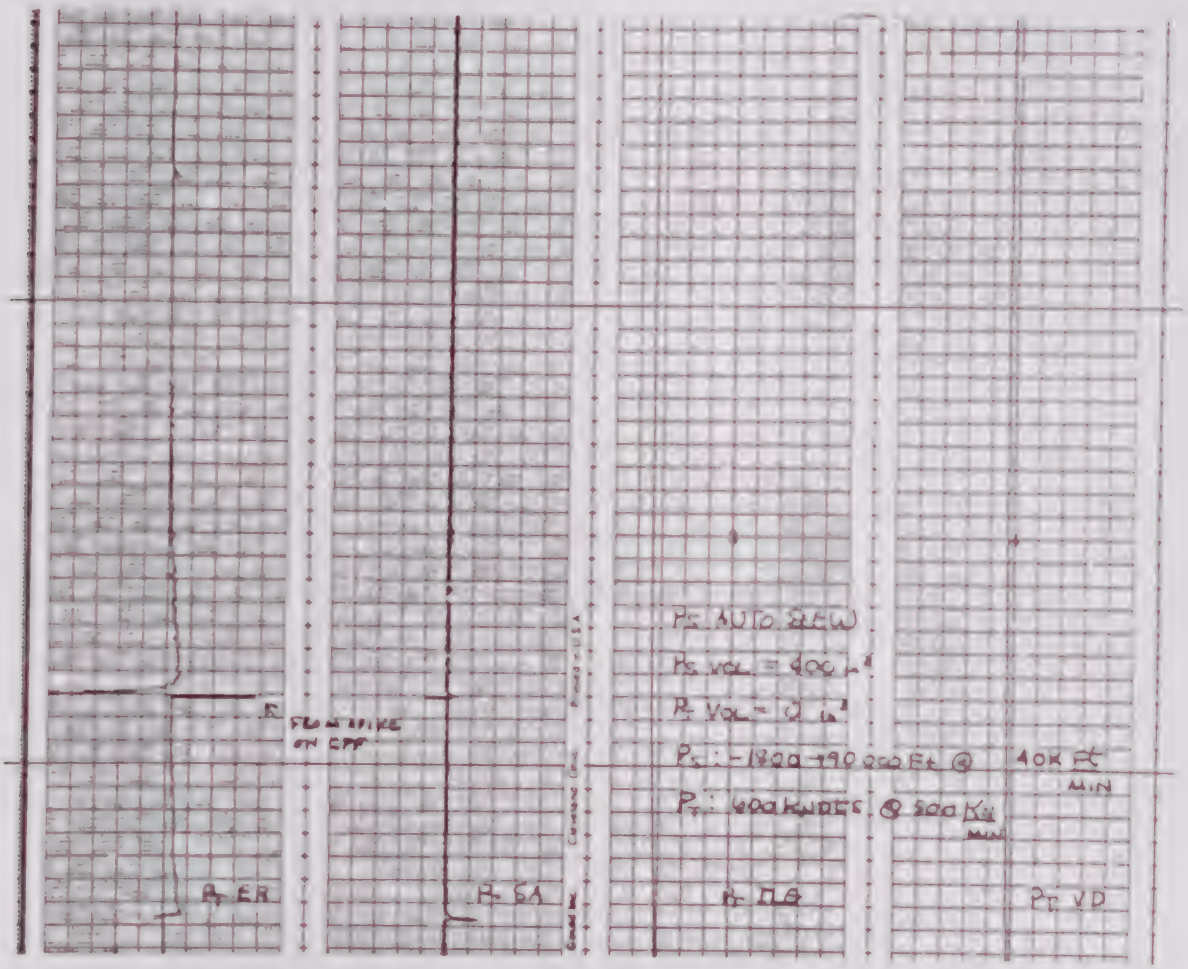
Ps AUTO SLEW
Ps VOL = 400 in³
Pt VOL = 0 in³
Ps: -1800 - 90 000 Ft @ 40K Ft/MIN
Pt: 600 KNOTS @ 500 Kn/MIN
FROM SPIKE ON EPF
Pt ER
Pt SA
Pt VD

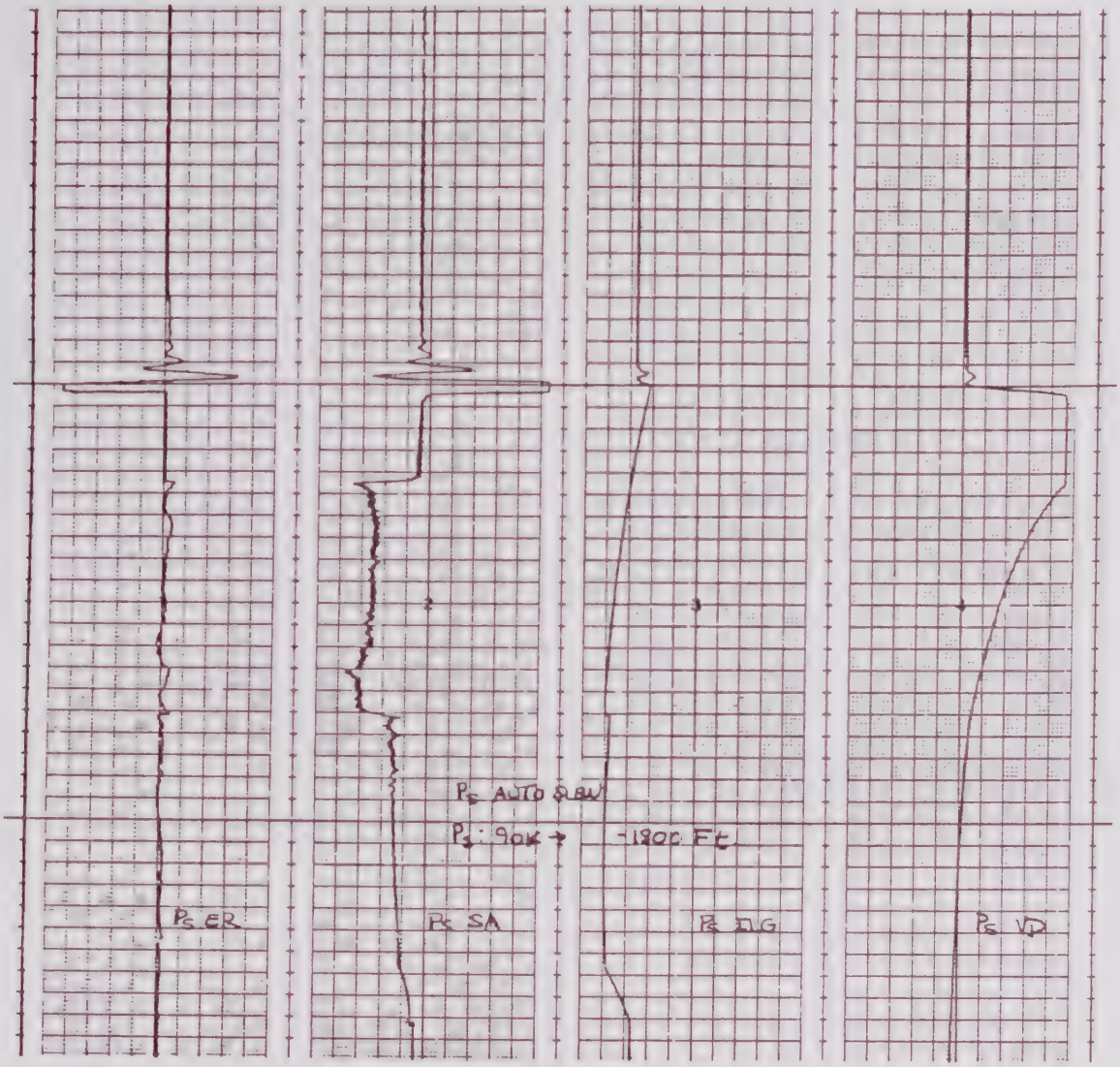
Ps AUTO SLEW
Ps: 90K → -1800 Ft.
Ps ER
Ps SA
Ps DG
Ps VP

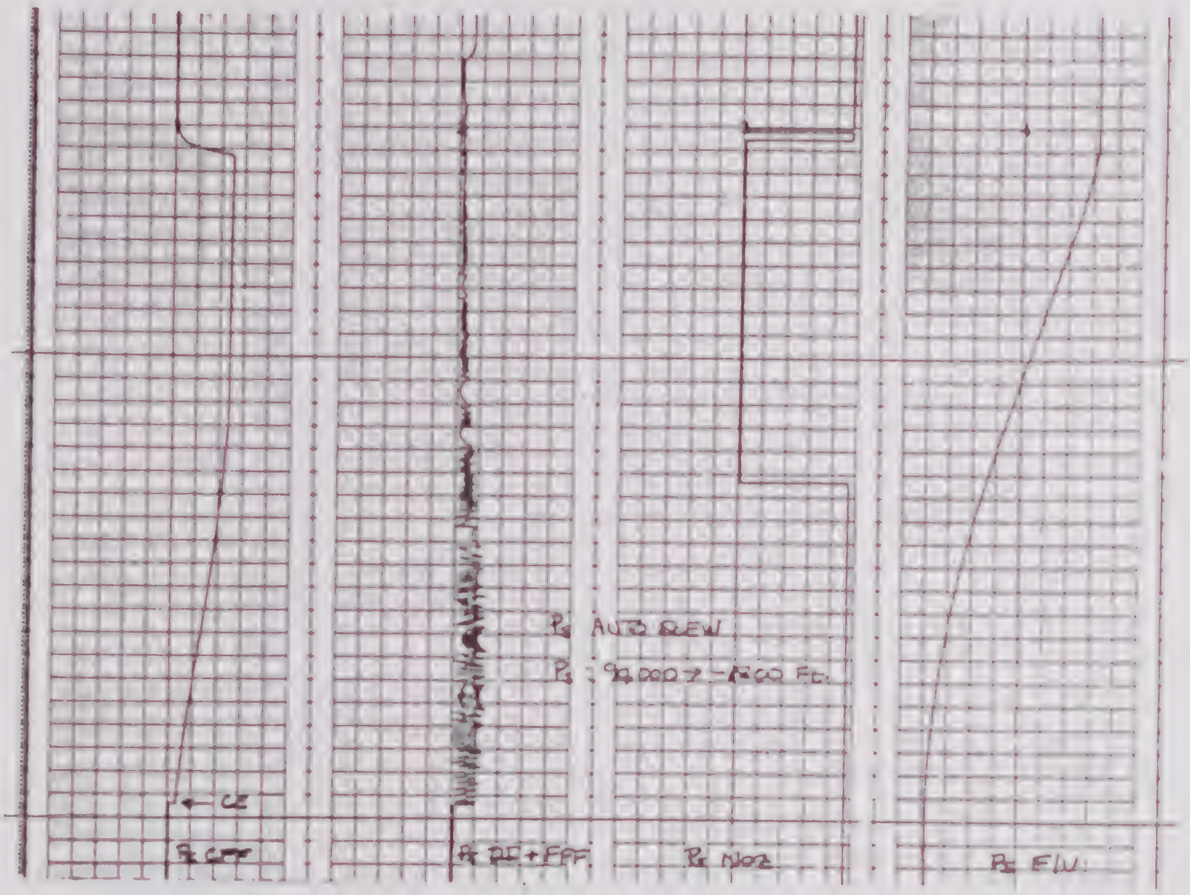
AUTO SLEW

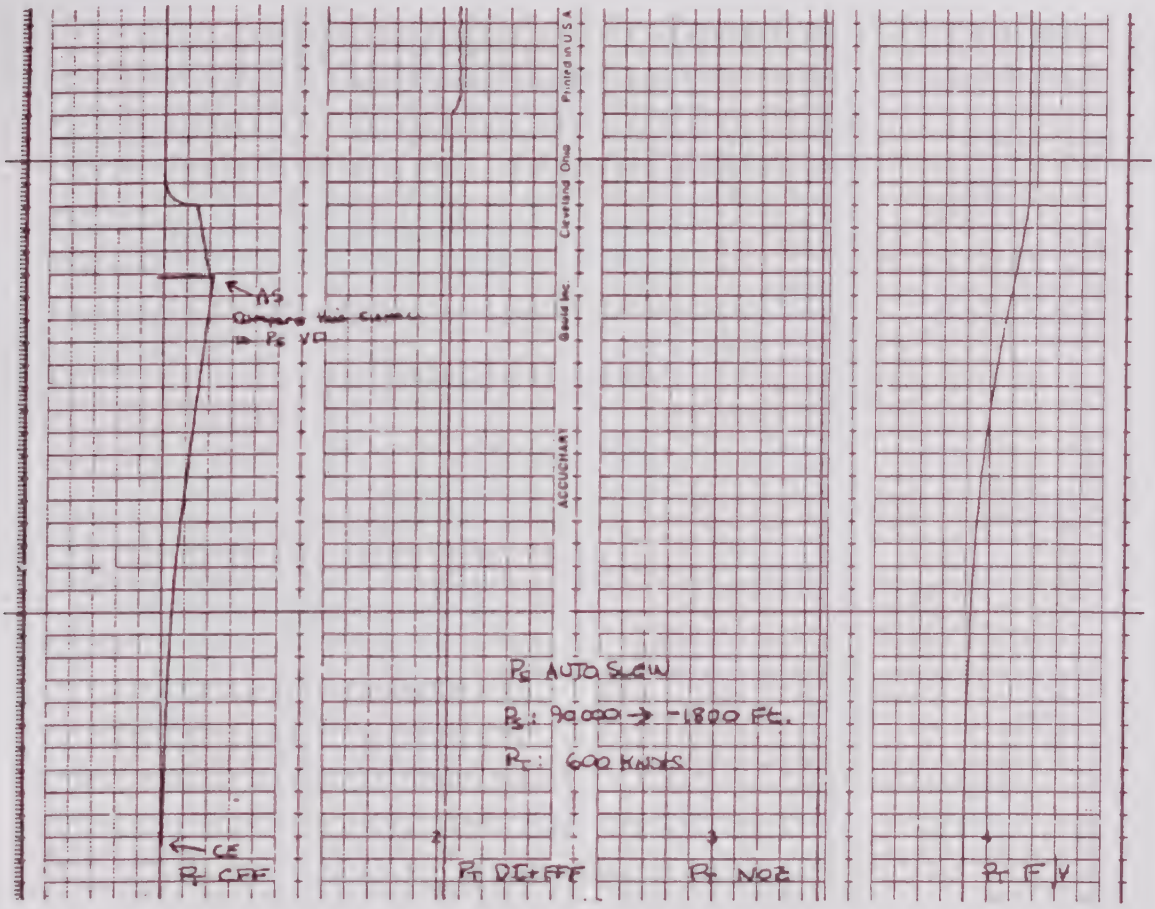
AS
CE
PT CFF
PT DI+FFF
PT NOZ
PT F V
PS AUTO SLEW
PS: 90000 → -1800 FT.
PT: 600 KNOTS
ACCUCHART
Gould Inc.
Cleveland Ohio
Printed in U.S.A.

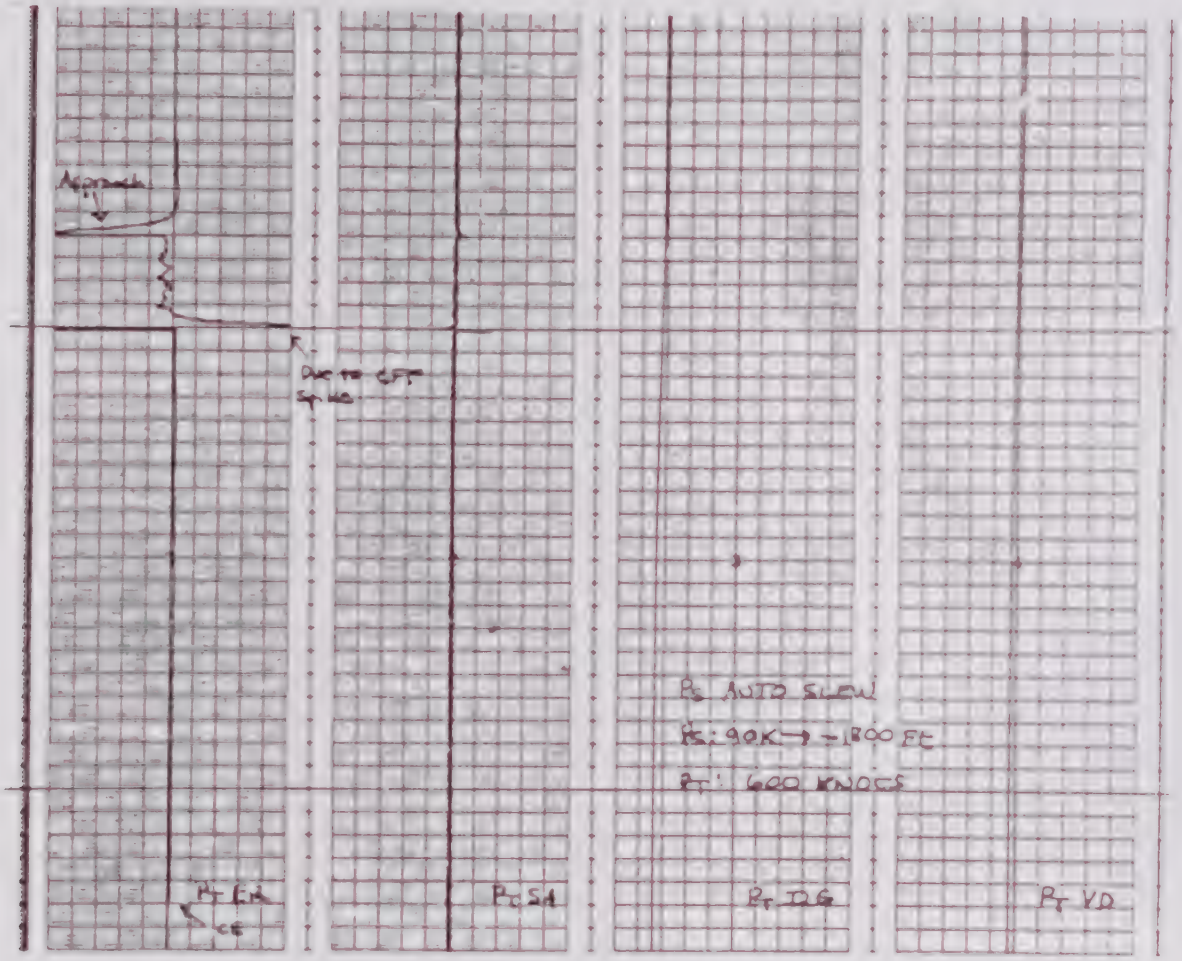
Approach
Pt SA
Pt DG
Pt VD

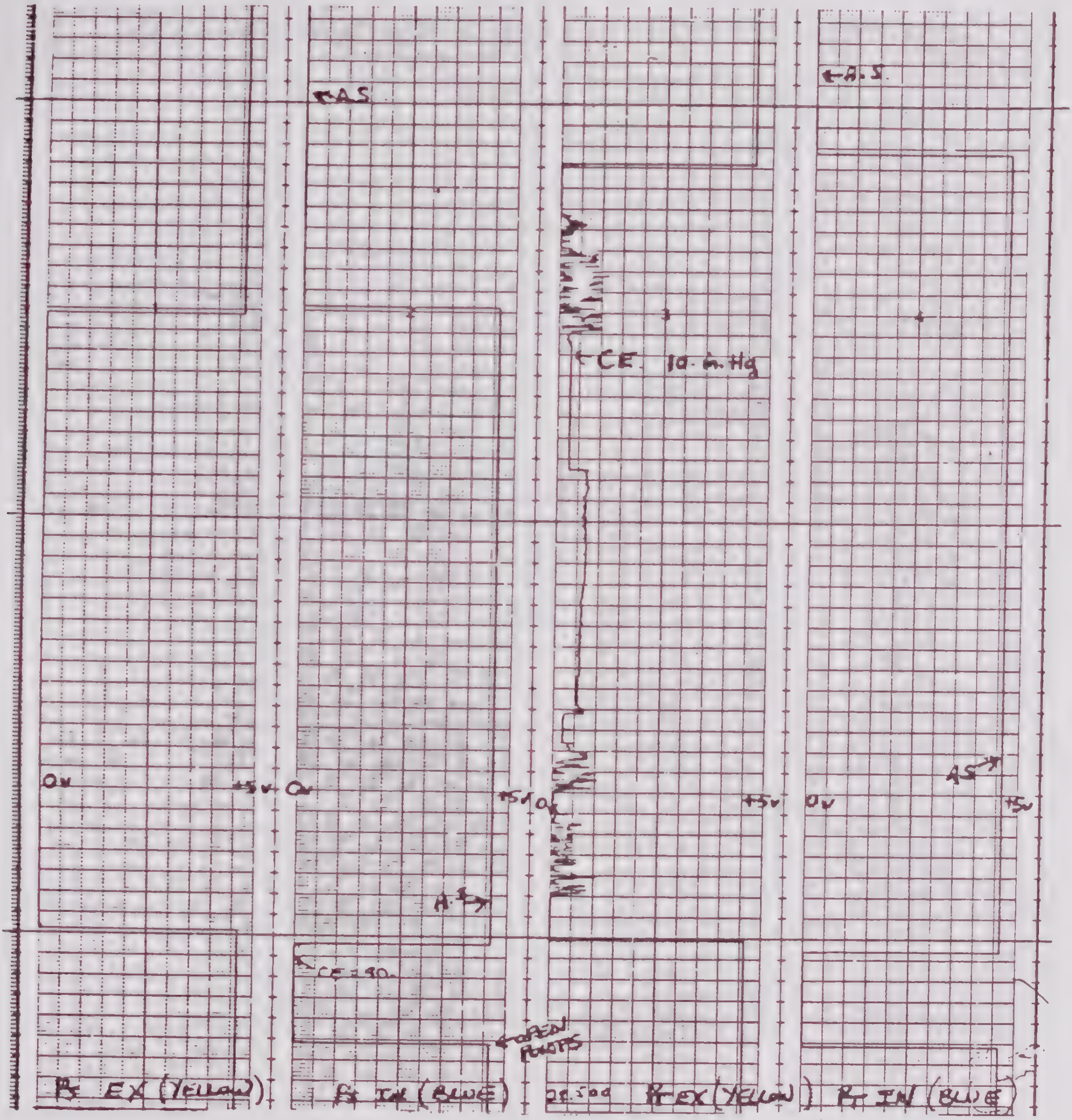
←AS
←A.S.
←CE 10 in.Hg
0v
+5v
0v
+5v
0v
+5v
0v
+5v
AS→
A.S→
←CE=30
←OPEN PORTS
Ps EX (YELLOW)
Pt IN (BLUE)
Ps EX (YELLOW)
Pt IN (BLUE)

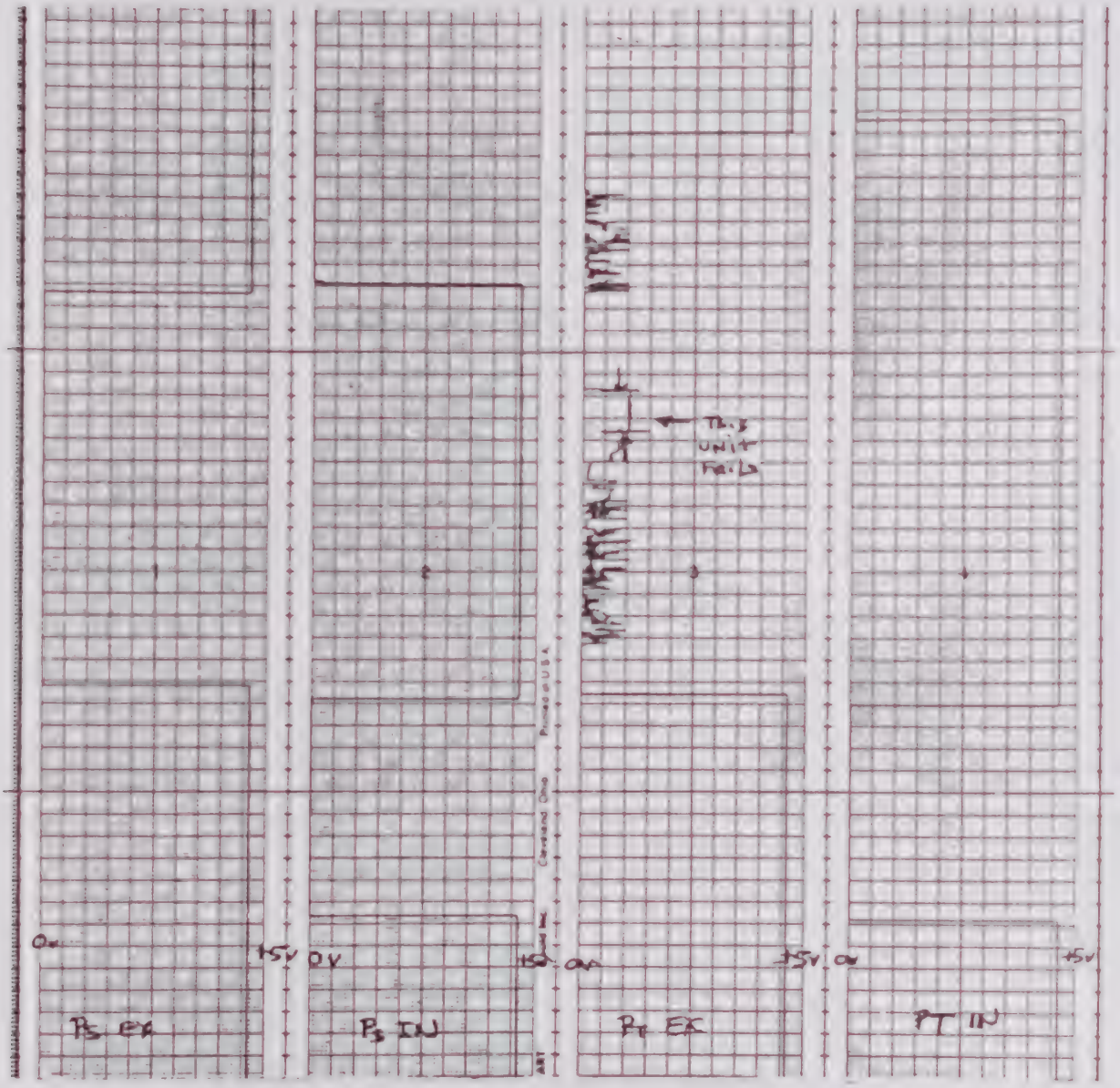

ADT-222B Calibration Procedures
Table 4-17 (cont)

29. COMPLETE OUTLINE FOR EB TEST OF ADT-222B

1. Set P_S and P_T pressure regulators and seal lock screws.
2. Leak test complete pneumatic system.
3. Calibrate sensors. (Coarse)
4. Calibrate sensors. (Fine)
5. Check calibration.
6. Plot PS/P_T data.
7. Pressure source quality.
8. Vaccum source quality.
9. Shut down procedure.
10. Pressure overrange tests.
11. Set P_S Gain Switches (Preliminary.)
12. Set P_T Gain Switches (Preliminary.)
13. Check D/A voltage.
14. Trim P_S/P_T error register resistor.
15. Measure mode tests.

16. Pressure maintenance tests (P_S = .5, 15, 32, and P_T = 1.5, 45, 90 inHg).

    a) NO "E"

    b) P_S, P_T, H, Q_C, V_C, Mb display check

    c) MSR to CONTROL and CONTROL to MSR transient check

    d) TP1 (F/V) noise check

    e) Overshoot test

    f) Digital integrator maximum voltage check

    g) Dynamic drift rate check

    h) Dynamic feedthrough test

16.1 Sensor too hot test.

17. Dynamic input modulation.

18. Average altitude rate accuracy.

19. Average airspeed rate accuracy.

20. Q_C transient control.

21. DSSL and DQCL limits.

22. Fixed orifice venting test.

23. Strip chart runs.

a) Self Test for P_S

Channel No.	TP No.	Name	Sensitivity
1	10	CFF	.2V/mm (10V/FS)
2	6	ER	.2V/mm (10V/FS)
3	9	DI+FFF	.2V/mm (10V/FS)
4	2	ILG	.2V/mm (10V/FS)

Run the strip chart at 1 mm/sec paper speed.

b) P_S runs

Channel	TPΔ	Name	Sensitivity
1	6	ER	.2V/mm (10V/FS)
2	4	SA	.05V/mm (2.5 V/FS)
3	2	ILG	.2V/mm (10V/FS)
4	7	VD	.5V/mm (25V/FS)

1. Mode = altitude/airspeed
2. Altitude rate = 40,000 feet/minute
3. Airspeed = 600.0 knots
4. Airspeed rate = 500 knots/minute
5. Run altitude -1,800 feet to 90,000 feet and 90,000 feet to -1,800 feet.

Run 1 Displacement rate and zero volume

Run 2 Precision rate and zero volume

Run 3 Displacement rate and 200 $inches^3$ volume (6 ft 3/16 I.D. hose between 222B and tank).

NOTE

Tanks and hose must pass leak test.

c) Self test for P_T

d) P_T runs

1. Mode = altitude/airspeed
2. Altitude rate = 40,000 feet/minute
3. Airspeed rate = 500 knots/minute
4. Run 0 to 1000 knots and 1000 to 0 knots.

e) Nozzle Contact Quality

1. All Channels 5V FS.

Channel 1	P_S EX	Yellow	TB2-5
Channel 2	P_S IN	Blue	TB2-3
Channel 3	P_T EX	Yellow	TB4-5
Channel 4	P_T IN	Blue	TB4-3

2. Mode = P_S/P_T , Control.
3. Altitude rate = 2000 ft/min.
4. Airspeed rate = 100 milli-inches Hg/min.
5. SSL/QCL ON
6. Manual valves open to atmosphere.
7. Command P_S/P_T to 40 inHg.
   Run until AS appears in both displays.
8. Command P_S/P_T to 10 inHg.
   Run until AS appears in both displays.

f) Error reg noise

1. TP6 ER at 5 mV/mm (.25V/FS)

2. Run 60 seconds of P_S and P_T for

P_S = .5 inHg and P_T = 1.5 inHg

P_S = 15.0 inHg and P_T = 45 inHg

P_S = 32.0 inHg and P_T = 90 inHg

Group A Altitude = 16,000 feet

Run 1 Displacement rate and zero volume

Run 2 Precision rate and zero volume

Run 3 Displacement rate and 200 inches^3

Group B Altitude = 67,000 feet

Run 1 Displacement rate and zero volume

Run 2 Precision rate and zero volume

Run 3 Displacement rate and 200 inches^3

Group C

Run 1 Split Control (± 1 milli-inches Hg/Sec)

g) Single Vacuum Pump Operation

1. Single 300 liter/min vacuum pump.

2. Mode = Altitude/Airspeed.

3. Altitude rate = 40,000 ft/min.

4. Airspeed rate = 500 knots/minute.

P_S Run Displacement rate and 60 in^3 volume (24 inch 3/16 ID hose between 222B and tank, and 12 inch 3/16 ID hose between two 30 in^3 tanks). Run altitude from -1800 feet to 90,000 ft and from 90,000 feet to -1800 feet with airspeed at 600 knots.

P_T Run 1 Displacement rate and 60 in^3 volume. Run Airspeed from 0 to 1000 knots and from 1000 to 0 knots with altitude at 16,000 ft.

P_T Run 2 Displacement rate and 60 in^3 volume. Run Airspeed from 0 to 1000 knots and from 1000 to 0 knots with altitude at 67,000 ft.

h) Label strip chart

1. ADT-222B S/N, date, and tester
2. P_S control valve manufacturer and S/N
3. P_S control valve manufacturer and S/N
4. P_S sensor S/N
5. P_T sensor S/N
6. Decimal gain value of: PSNC, PSIC, PSEC, PTMC, PTIC, PTEC.

Label each run with:

1. P_S or P_T
2. Displacement or Precision
3. Zero volume or 60 $inches^3$ or 200 in^3
4. H = 16,000 feet or 67,000 feet
5. P_S measure/P_T Control (Split Control)
6. Error register noise and P_S/P_T pressure equals _____ inHg.

i) Inspect all runs.

Section 6. Repair

1. Recommended Spare Parts

Sperry recommends that the ADT-222B be repaired by circuit card replacement. A list of the spare assemblies to be used for this purpose is provided in table 4-18. Table 4-19 lists materials. The troubleshooting procedures in section 4 of this chapter do not include procedures to isolate to the individual part. Troubleshooting some of the digital cards can be difficult, and it is recommended that they be returned to Sperry for repair.

REF DES	DESCRIPTION	PART NO.	QTY
A1	Timing and Control Card	4021530-901	1
A2	Program Control Card	4021532-901	1
A3, A4	Arithmetic A/B Card	4021534-901	1
A5	Control and Scratch Pad Card	1900312-901	1
A6	Program and Sensor Memory Card	1900308-901	1
A7	Control, D/A, and CAD Card	4022594-901	1
A8	Scratch Pad/Calibration Memory Card	4047699-901	1
A9	Clock and F/C Card	4023083-901	1
A10	ECA ASCII Interface (Optional)	4027467-901	1
A12	P_t Inner Loop Card	4047705-901	1
A13	P_s Inner Loop Card	4047707-901	1
A14	FP Multiplexer Card	4030876-901	1
A15, A16	Display Card	4022135-901	1
A17	Power Supply	4048087-901	1
A18	P_s Sensor Assembly	4026197-907 or -909	1
A19	P_t Sensor Assembly	4026197-908 or -910	1
SV1, SV2, SV3, SV4	Solenoid Valve	4046859-801	1
SV5, SV6	Solenoid Valve	4046859-301	1
SV7, SV8	Solenoid Valve	4046859-201	1
SV9	Solenoid Valve	4046871	1
CV2	Control Valve (P_t)	4034452-1	1
CV1	Control Valve (P_s)	4034452-2	1
-	Check Valve	4046868-12	1
B1	Fan	4030943	1

NOTE: SV1 thru SV9 are interchangeable with S1 thru S9; and CV1 and CV2 with L1 and L2.

Recommended Spare Subassemblies
Table 4-18

Material	Approved Source
1/4 inch OD, No. 66P, Natural, Poly-Flo Tubing	Imperial Division (30327), Imperial Eastman Group, ITE Imperial Corp, Chicago, IL
3/8 inch OD, No. 66P, Natural, Poly-Flo Tubing	Imperial Division (30327), Imperial Eastman Group, ITE Imperial Corp

Materials
Table 4-19

2. Disassembly

These procedures shall be used to disassemble the ADT-222B only to the extent necessary to make repairs of faults determined in section 4 of this chapter.

All of the figures and figure item numbers referenced in these procedures are contained in Chapter 5. To aid in reassembly, save all attaching hardware during disassembly, and tag any unsoldered connections with location information and harness tie points.

WARNING: DISCONNECT POWER BEFORE ATTEMPTING TO DISASSEMBLE ADT-222B.

Disassemble the ADT-222B as follows:

A. Remove top cover to gain access to chassis mounted parts and subassemblies by removing two screws at rear of top cover. The bottom cover is removed in similar fashion.

WARNING: AFTER APPROXIMATELY 0.050 INCH OF CARD TRAVEL, CARD RETENTION FORCE DECREASES BY AT LEAST 50 PERCENT. EXERCISE CARE TO PREVENT INJURY TO FINGERS OR DAMAGE TO EQUIPMENT FROM SUDDEN MOTION WHEN RETENTION FORCE DECREASES.

B. To remove a circuit card from the card rack assembly (5, figure 5-2), pull up extraction handle at each end of card and lift card from its guide slot.

C. To remove a sensor assembly (19 or 20, figure 5-2), disengage connector by alternately loosening two connector screws until connector separates from its socket. Disconnect pneumatic hose fitting from sensor, and remove three screws that secure sensor to chassis.

2. D. To remove power supply (2, figure 5-2), disengage two power supply connectors by alternately loosening two connector screws until each connector separates from its socket. Remove four screws under bottom shelf that secure power supply to chassis, and remove power supply.

E. To remove a solenoid valve or control valve, disconnect pneumatic hose fittings from valve, disconnect valve control leads from terminal board, and remove attaching hardware. To remove P_s or P_t control valve, it may be necessary to remove solenoid valve SV9.

F. To remove front panel multiplexer card (28, figure 5-3), disengage five connectors by alternately loosening two connector screws until each connector separates from its socket, and remove multiplexer card attaching hardware.

G. To remove a display card (2, figure 5-5), remove attaching hardware and disengage display assembly connector P2 (3A, figure 5-5). Each display card is wired to the display assembly wiring harness. Unsolder these connections to remove card.

H. To remove a gas discharge tube, partially remove display card and unplug gas discharge tube.

I. To remove front panel components, remove front panel multiplexer card and both display cards, unsolder component leads at component, and remove attaching hardware.

J. To remove a pushbutton lamp, pull lens from face of pushbutton switch, and unscrew lamp.

K. To remove a regulator, disconnect pneumatic hose fittings from regulator, remove pressure gauge, and remove attaching hardware.

L. To remove card rack assembly, turn connector locking handle to open position, disengage connector J1 (3, figure 5-9) from its socket, and loosen captive screws that secure card rack to chassis.

3. Repair

Repair of the ADT-222B consists of the replacement of failed subassemblies and chassis mounted parts. At the user's discretion, certain subassemblies may be repaired by replacement of failed components, in which case, repair can be accomplished using standard shop practices. Caution must be taken in replacing components on the circuit cards, since the multi-layered printed wiring boards can be damaged by improper soldering or desoldering techniques.

The following rules must be observed when effecting repair of the ADT-222B.

A. If either sensor is replaced and the ADT-222B is calibrated to an air medium (for 4047505-211, -212, -221, -222, -411, -412, -421, -422):

P_s sensor (A18) shall be Part No. 4026197-907
P_t sensor (A19) shall be Part No. 4026197-908

B. If either sensor is replaced and the ADT-222B is calibrated to a nitrogen medium (for 4047505-213, -214, -223, -224, -413, -414, -423, -424):

P_s sensor (A18) shall be Part No. 4026197-909
P_t sensor (A19) shall be Part No. 4026197-910

C. If either sensor is replaced, the associated PROM on card A6 must also be replaced. The appropriate PROM are:

Sensor	PROM on card A6
P_s (A18)	U1, U2
P_t (A19)	U3, U4

3. D. If card A6 is replaced, the P_s and P_t PROM must be removed from the failed card and installed on the new card.

E. If either sensor or control valve, or inner loop card is replaced, the new card must be calibrated in accordance with table 4-17, to be supplied at a later revision. Calibration consists of selecting the correct values of the following resistors:

Inner Loop Card	Select Resistors
P_s (A13)	R1, R49, R80, R81, R84, R85, R134, R135, R164, R166, R167
P_t (A12)	R1, R49, R80, R81, R84, R85, R134, R135, R164, R166, R167

These resistor values can only be determined with the inner loop card installed in the ADT-222B in which it is operating. The select resistors compensate for variations between total pneumatic responses of different ADT-222B systems.

3. F. To ensure against possible intermittent circuit paths, care shall be taken to reflow (heat and/or resolder) area on circuit board opposite standoff terminals.

G. When repair requires the desoldering and soldering of components, a low power (15-watt) soldering iron must be used, and the area to be soldered must be cleaned with isopropyl alcohol before and after soldering to remove residue.

H. When a solenoid valve or a control valve is replaced, refer to table 4-20 to ensure correct terminations.

I. After the ADT-222B has been repaired, table 4-17 (to be supplied at a later revision) must be performed to ensure that the system operates in accordance with the performance specifications.

4. Assembly

The assembly procedures for the ADT-222B are the reverse of the disassembly procedures. During assembly, care must be taken to ensure that the following steps are performed:

A. Thread sealant must be used on all pneumatic fittings.

B. The pneumatic fittings must not be overtightened. They shall be tightened finger-tight only, then tightened 1/2-turn more with a wrench.

C. When installing circuit cards into the card rack assembly, DO NOT FORCE THEM. Applying excessive pressure can bend or break the connector pins in the card or card rack connectors. The circuit cards are keyed to preclude insertion in the wrong direction or the wrong guide slot. If a card does not easily engage in the card rack, check to see that it is in the proper guide slot, with the proper orientation, and that none of the connector pins are bent or broken in either the card connector or its mating connector in the card rack.

The following procedure is recommended when installing a circuit card.

(1) Stand up beside unit and apply alternating pressure with both thumbs to top of card inboard of handle rivets.

(2) Using a steady rocking motion, slide each card down its guides until increased resistance is met.

NOTE: Increased pressure is required approximately 0.030 to 0.050 inch before complete engagement.

(3) Continue rocking motion to ensure pin alignment, then increase force to completely seat the connectors.

Valve	Lead (color)	Termination	Manifold
SV1	1 (BLK)	TB1-5	P_s
	2 (BLK)	TB1-6	
SV2	1 (BLK)	TB1-9	P_s
	2 (BLK)	TB1-10	
SV3	1 (BLK)	TB3-5	P_t
	2 (BLK)	TB3-6	
SV4	1 (BLK)	TB3-9	P_t
	2 (BLK)	TB3-10	
SV5	1 (BLK)	TB1-7	P_s
	2 (BLK)	TB1-8	
SV6	1 (BLK)	TB3-7	P_t
	2 (BLK)	TB3-8	
SV7	1 (BLK)	TB1-11	P_s
	2 (BLK)	TB1-12	
SV8	1 (BLK)	TB3-11	P_t
	2 (BLK)	TB3-12	
CV1	1 (RED)	TB2-1	P_s
	2 (BLK)	TB2-2	
	3 (BLU)	TB2-3	
	4 (GRN)	TB2-4	
	5 (YEL)	TB2-5	
CV2	1 (RED)	TB4-1	P_t
	2 (BLK)	TB4-2	
	3 (BLU)	TB4-3	
	4 (GRN)	TB4-4	
	5 (YEL)	TB4-5	
SV9	1 (BLK)	TB5-5	-
	2 (BLK)	TB5-6	

Valve Electrical Terminations
Table 4-20

4. D. The ADT-222B front panel may require shim(s) to improve the retention of the panel. The following procedure should be performed if vertical play of the panel is greater than 0.040 inch.

(1) Remove top crossbars by removing nuts at ends of bar.

(2) Raise front panel far enough to insert shim(s) (83, figure 5-2, sheet 1) in bottom crossbar.

(3) Alternately add shim(s) in top and bottom crossbars until vertical play of panel is less than 0.040 inch. Secure top crossbar when vertical tolerance has been achieved.

NOTE: Adhesive may be used to hold shim(s) during assembly.

Section 7. Special Tools, Fixtures, and Test Equipment

The following equipment is required for test, fault isolation, repair, and calibration of the ADT-222B.

NOTES: 1. Equivalent substitutes may be used for items listed.

2. Equipment preceded with an asterisk (*) is not required for field maintenance and need not be acquired.

Manometer - Model LO25FX110, Schwien Engineering Inc, Pomona, CA

Digital voltmeter - Model 3440A, Hewlett-Packard Co, Sunnyvale, CA

*Counter - Model 5245L, Hewlett-Packard Co

Oscilloscope - Model 7633, Tektronix Inc, Beaverton, OR

Plug-in module - Model 7A22, Tektronix Inc

X10 Probe - Model P6105, Tektronix Inc

Multimeter - Model 260, Simpson Electric Co, Division of American Gage and Machine Co, Elgin, IL

Functional generator - VCG Model 111, Wavetek Inc, San Diego, CA

*Chart recorder - Model 2400, Gould Inc, Instrument Systems Division, Cleveland, OH

*Preamplifier (four required) - Model 13-4615-10, Gould Inc, Instrument Systems Division

*Accumulator tank - Two 30 cubic inch volume tanks, Part No. 4022677, or two 200 cubic inch volume tanks, Part No. 4050313-2, Sperry Flight Systems, Commercial Division, Phoenix, AZ

*Valve test tool - Part No. T322986, Sperry Flight Systems

Decade resistance box - Type 1432P, GENRAD Inc, West Concord, MA

Soldering iron - Model WTCPN with 700 °F tip, Weller Division, Cooper Industries Inc, Cheraw, SC

Pressure source

Dry air - For Part No. 4047505-2X1, -2X2, -4X1, and -4X2
Dry nitrogen - For Part No. 4047505-2X3, -2X4, -4X3, and -4X4

Vacuum pumps - Refer to Vol I, 2-2, paragraph 1, for various configurations.

*Pressure hose - 3/16-inch inside diameter, 24 inches long, commercial

*Pressure hose - 3/16-inch inside diameter, 12 inches long, commercial

Select resistors - Refer to Chapter 5.

*Spare subassemblies - Refer to table 4-18.

Calibration cable - See figure 4-53.

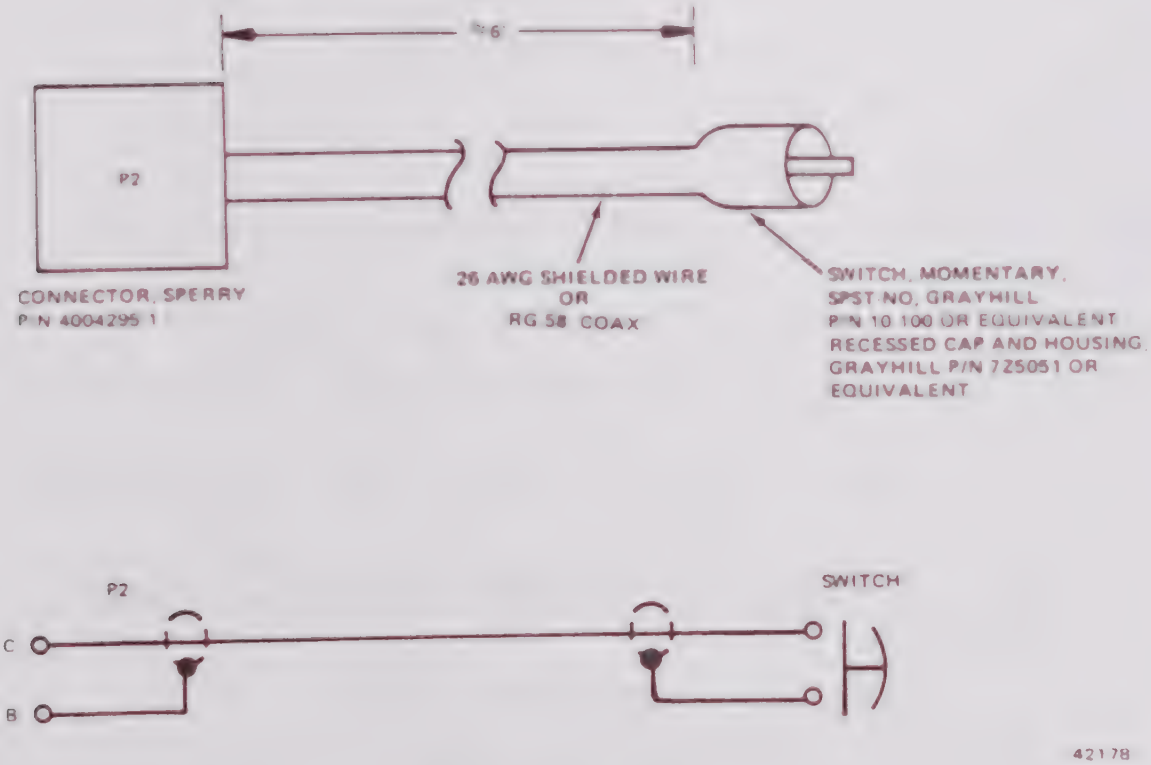

Calibration Cable
Figure 4-53

CHAPTER 5

ILLUSTRATED PARTS LIST

CHAPTER 5
ILLUSTRATED PARTS LIST

Table of Contents

Chapter-Section	Subject	Page
5-1	INTRODUCTION	1
5-2	NUMERICAL INDEX	1
5-3	REFERENCE DESIGNATION INDEX	1
5-4	DETAILED PARTS LIST	1

INTRODUCTION

1. General

This chapter lists, describes, and illustrates replacement parts for subject equipment and will aid in requisitioning, storing, issuing, and identifying parts.

2. Using the Parts List

A. The parts list consists of a top-down breakdown of the equipment into assemblies, subassemblies, and detail parts. For each figure the complete assembly is listed first with the remaining parts indented to show assembly relationship.

B. Part numbers and nomenclature data identify each part. Item numbers refer to the accompanying illustration. When an item is assigned an equipment designator, that symbol is shown on the illustration.

C. The Eff (Effectivity) Code column shows differences between two or more similar units listed together in the same figure. Parts not used in all of the units bear the code letter or letters for the unit in which the parts are used. If this column is blank, the part is used in all of the units listed for that figure.

D. The Units Per Assembly column lists the quantity of each part required for the next higher assembly. The letters AR indicate the quantity to be as required. The letters RF indicate the part is repeated from another location or listed as a reference item. The phrase "SEL FR PN .... MADE BY ...." identifies vendor items, with Sperry-imposed performance standards, which should be procured from Sperry Flight Systems.

3. Identifying Parts

A. If the part number is not known, locate the item and/or equipment designator on the illustration. Note the item number assigned to the part, and refer to the detailed parts list.

B. If the part number is known, refer to the numerical index and locate the number in the Part Number column. Note the figure and item number and refer to the detailed parts list.

4. Abbreviations and Symbols

Abbreviations have been extracted from ANSI Y1.1. Nonstandard abbreviations and symbols are listed below:

RF	Reference
SEL FR	Select from
SPN	Sperry part number
	STATIC SENSITIVE DEVICE

5. Manufacturer Codes

Manufacturer codes preceded by the capital letter "V" are used in the nomenclature column to identify the source of procurement for vendor items. A listing of these codes and the manufacturer name and address is contained in table 5-1. When no code number exists, the full name and address of the manufacturer is included in the nomenclature column. Absence of a code for other than standard parts indicates the item is a Sperry part, manufacturer code 58960.

6. Optional Part Number Sources

Many vendor items may be procured from multiple manufacturing sources. Table 5-2 lists these items together with the optional manufacturer part number and code.

CODE	MANUFACTURER
00779	AMP INC P O BOX 3608 HARRISBURG, PA 17105
01121	ALLEN-BRADLEY CO 1201 SOUTH 2ND ST MILWAUKEE, WI 53204
01295	TEXAS INSTRUMENTS INC SEMICONDUCTOR GROUP 13500 N CENTRAL EXPRESSWAY DALLAS, TX 75222
02570	CRAWFORD FITTING CO 29500 SOLON ROAD SOLON, OH 44139
02660	BUNKER RAMO CORP AMPHENOL NORTH AMERICAN DIV 2801 S 25TH AVE BROADVIEW, IL 60153
02735	RCA CORP SOLID STATE DIVISION ROUTE 202 SOMERVILLE, NJ 08876
02875	HUDSON TOOL AND DIE CO INC 18 MALVERN ST NEWARK, NJ 07105
03296	HERBERT MARTIN KAROL INDUSTRIES INC NYLON MOLDING CO DIV 260 SCHUYLER AVE KEARNY, NJ 07032
03550	VANGUARD ELECTRONICS CO INC 930 W HYDE PARK BLVD INGLEWOOD, CA 90302
03877	INCON INC TRANSITRON PRECISION CONNECTOR DIV 316 ASH ST READING, MA 01867
03888	KDI PYROFILM CORP 60 S JEFFERSON RD WHIPPANY, NJ 07981
04013	TAURUS CORP 1 ACADEMY HILL LAMBERTVILLE, NJ 08530
04713	MOTOROLA INC SEMICONDUCTOR GROUP 5005 E MCDOWELL RD PHOENIX, AZ 85008
05041	MASTERITE INDUSTRIES INC 2841 LOMITA BLVD TORRANCE, CA 90505
05079	TRANSISTOR ELECTRONICS DIV OF AEROTRON INC WEST RD BENNINGTON, VT 05201
06540	AMATOM ELECTRONIC HARDWARE DIV OF MITE CORP 446 BLAKE ST NEW HAVEN, CT 06515
06560	AIRCO INC AIRCO ELECTRONICS 945 GRAND AVE GRAND PLAZA NOGALES, AZ 85621
06665	PRECISION MONOLITHICS INC SUB OF BOURNS INC 1500 SPACE PARK DR SANTA CLARA, CA 95050
07047	THE ROSS MILTON CO 511 SECOND STREET PIKE SOUTHAMPTON, PA 18966
07126	THE DIGITRAN CO 855 SOUTH ARROYO PARKWAY PASADENA, CA 91105

CODE	MANUFACTURER
07263	FAIRCHILD CAMERA AND INSTRUMENT CORP SEMICONDUCTOR DIV 464 ELLIS ST MOUNTAIN VIEW, CA 94042
07910	TELEDYNE SEMICONDUCTOR 12515 CHADRON AVE HAWTHORNE, CA 90250
09023	CORNELL-DUBILIER ELECTRONICS DIV FEDERAL PACIFIC ELECTRIC CO 2652 DALRYMPLE ST SANFORD, NC 27330
09798	ELECTRO WINDERS CO INC 854 W FRONT COVINA, CA 91722
11236	CTS OF BERNE INC 406 PARR ROAD BERNE, IN 46711
11237	CTS KEENE INC 3230 RIVERSIDE PASO ROBLES, CA 93446
11532	TELEDYNE INC TELEDYNE RELAYS 12545 DAPHNE ST HAWTHORNE, CA 90250
11649	CAJON CO 32550 OLD SOUTH MILES ROAD SOLON, OH 44139
12406	ELPAC ELECTRONICS INC 3131 S STANDARD AVE SANTA ANA, CA 92705
12615	U S TERMINALS INC 7504 CAMARGO ROAD CINCINNATI, OH 45243
12954	SIEMENS CORP COMPONENTS GROUP 8700 E THOMAS RD SCOTTSDALE, AZ 85252
12969	UNITRODE CORP 580 PLEASANT ST WATERTOWN, MA 02172
13103	THERMALLOY CO INC 2021 W VALLEY VIEW LANE DALLAS, TX 75234
13919	BURR-BROWN RESEARCH CORP 6730 S TUCSON BLVD TUCSON, AZ 85706
14099	SEMTECH CORP 652 MITCHELL ROAD NEWBURY PARK, CA 91320
14674	CORNING GLASS WORKS HOUGHTON PARK CORNING, NY 14830
14752	ELECTRO CUBE INC 1710 S DEL MAR AVE SAN GABRIEL, CA 91776
14936	GENERAL INSTRUMENT CORP DISCRETE SEMI CONDUCTOR DIV 600 W JOHN ST HICKSVILLE,NY 11802
15454	AMETEK INC RODAN DIV 2905 BLUE STAR ST ANAHEIM, CA 92806
15818	TELEDYNE INC TELEDYNE SEMICONDUCTOR 1300 TERRA BELLA AVE MOUNTAIN VIEW, CA 94043
16512	FABRI-TEK INC NATIONAL CONNECTOR DIV 9210 SCIENCE CENTER DR NEW HOPE, MN 55428

List of Manufacturers
Table 5-1 (cont)

CODE	MANUFACTURER
17856	SILICONIX INC 2201 LAURELWOOD RD SANTA CLARA, CA 95054
18034	NUPRO CO 4800 E 345TH ST WILLOUGHBY, OH 44094
18324	SIGNETICS CORP 811 E ARQUES SUNNYVALE, CA 94086
18677	SCANBE MFG CO 3445 FLETCHER AVE EL MONTE, CA 91731
18915	THE BIRTCHER CORP INDUSTRIAL DIV 4501 N ARDEN DR EL MONTE, CA 91731
19647	CADDOCK ELECTRONICS INC 3127 CHICAGO AVE RIVERSIDE, CA 92507
19701	MEPCO/ELECTRA INC A NORTH AMERICAN PHILIPS CO P O BOX 760 MINERAL WELLS, TX 76067
21355	D-CEMCO INC 3200 N SAN FERNANDO BLVD BURBANK, CA 91504
21845	SOLITRON DEVICES INC SEMICONDUCTOR GROUP FLORIDA OPERS 1177 BLUE HERON BLVD RIVIERA BEACH, FL 33404
24444	GENERAL SEMICONDUCTOR INDUSTRIES INC 2001 W 10TH PLACE TEMPE, AZ 85281
26769	MEPCO/ELECTRA INC A NORTH AMERICAN PHILIPS CO 5900 AUSTRALIAN AVE WEST PALM BEACH, FL 33407
27014	NATIONAL SEMICONDUCTOR CORP 2900 SAN YSIDRO WAY SANTA CLARA, CA 95051
27802	VECTRON LABORATORIES INC 166 GLOVER AVE NORWALK, CT 06854
28262	KIP INC 13 TOWN LINE RD WOLCOTT, CT 06716
28520	HEYMAN MANUFACTURING CO 147 MICHIGAN AVE KENILWORTH, NJ 07033
28968	HOKE INC 1 TENAKILL PARK CRESSKILL, NJ 07626
29593	BUSSCO ENGINEERING INC 119 STANDARD ST EL SEGUNDO, CA 90245
29604	STACKPOLE COMPONENTS CO P O BOX 14466 RALEIGH, NC 27610
29832	TELEDYNE INC TELEDYNE PHILBRICK ALLIED DR AT RTE 128 DEDHAM, MA 02026
29948	GLASROCK PLASTICS GROUP 7380 BOHANNON RD FAIRBURN, GA 30213

CODE	MANUFACTURER
30327	I-T-E IMPERIAL CORP SUBSIDIARY OF GOULD INC VALVE AND FITTINGS DIV 6300 W HOWARD ST CHICAGO, IL 60648
31413	TERADYNE CONNECTION SYSTEMS INC 44 SIMON ST NASHUA, NH 03060
31433	UNION CARBIDE CORP ELECTRONICS DIV HIGHWAY 276 SE GREENVILLE, SC 29606
32159	WEST-CAP ARIZONA 2201 E ELVIRA ROAD TUCSON, AZ 85706
32293	INTERSIL INC 10900 N TANTAU AVE CUPERTINO, CA 95014
33095	SPECTRUM CONTROL INC 8061 AVONIA RD FAIRVIEW, PA 16415
34335	ADVANCED MICRO DEVICES 901 THOMPSON PL SUNNYVALE, CA 94086
34649	INTEL CORP 3065 BOWERS AVE SANTA CLARA, CA 95051
42470	NCR CORP DIRECTOR OF PRICING 1700 S PATTERSON BLVD DAYTON, OH 45479
46384	PENN ENGINEERING AND MFG CORP BOX 311 DOYLESTOWN, PA 18901
47904	POLAROID CORP 730 MAIN CAMBRIDGE, MA 02139
49956	RAYTHEON CO EXECUTIVE OFFICES 141 SPRING ST LEXINGTON, MA 02173
50364	MONOLITHIC MEMORIES INC 1165 E ARQUES AVE SUNNYVALE, CA 94086
53101	GARNER GLASS CO 177 S INDIAN HILL BLVD CLAREMONT, CA 91711
53174	APX PLASTICS INC 3407 DALWORTH ST ARLINGTON, TX 76011
53541	HYDRAULIC SERVOCONTROLS CORP 58 SONWIL DR BUFFALO, NY 14225
54335	NITRON INC A SUB OF NANON ELECTRONICS INC 10420 BUBB RD CUPERTINO, CA 95014
54904	ELTRA CORP SUB OF ALLIED CHEMICAL CO MEDWEC DIV 105 SKYPORT DR SCOTTSBLUFF, NE 69361
56289	SPRAGUE ELECTRIC CO 87 MARSHALL ST NORTH ADAMS, MA 01247
56878	SPS TECHNOLOGIES INC HIGHLAND AVE JENKINTOWN, PA 19046

List of Manufacturers
Table 5-1 (cont)

CODE	MANUFACTURER
58960	SPERRY CORP SPERRY FLIGHT SYSTEMS COMMERCIAL DIVISION 21111 N 19TH AVE PHOENIX, AZ 85036
61349	AMETEK INC U S GAGE DIV 909 CLYMER AVE SELLERSVILLE, PA 18960
70601	ITT HARPER INC CASTLETON DIV RIVER RD CASTLETON-ON-HUDSON, NY 12033
71183	WESTINGHOUSE ELECTRIC CORP BRYANT DIV 1421 STATE ST BRIDGEPORT, CT 06602
71279	CAMBRIDGE THERMIONIC CORP 445 CONCORD AVE CAMBRIDGE, MA 02138
71400	MCGRAW-EDISON CO BUSSMANN MFG DIV 502 EARTH CITY PLAZA ST LOUIS, MO 63178
71468	ITT CANNON ELECTRIC DIV INTERNATIONAL TELEPHONE AND TELEGRAPH CO 666 E DYER RD SANTA ANA, CA 92702
71785	TRW INC TRW CINCH CONNECTORS 1501 MORSE AVE ELK GROVE VILLAGE, IL 60007
72259	NYTRONICS INC 105 MADISON AVE NEW YORK, NY 10016
72619	DIALIGHT DIV AMPEREX ELECTRONIC CORP 203 HARRISON PL BROOKLYN, NY 11237
73138	BECKMAN INSTRUMENTS INC HELIPOT DIV 2500 HARBOR BLVD FULLERTON, CA 92634
73293	HUGHES AIRCRAFT CO ELECTRON DYNAMICS DIV 3100 W LOMITA BLVD TORRANCE, CA 90509
74545	HUBBELL HARVEY INC 584 DERBY MILFORD RD ORANGE, CT 06477
75378	CTS KNIGHTS INC 400 REIMANN AVE SANDWICH, IL 60548
75382	KULKA ELECTRIC CORP 633-643 S FULTON AVE MT VERNON, NY 10550
78189	ILLINOIS TOOL WORKS INC SHAKEPROOF DIVISION ST CHARLES ROAD ELGIN, IL 60120
79227	WATTS REGULATOR CO 10 EMBANKMENT ST LAWRENCE, MA 01842
79963	ZIERICK MFG CO RADIO CIRCLE MT KISCO, NY 10549
80031	MEPCO/ELECTRA INC 22 COLUMBIA RD MORRISTOWN, NJ 07960

CODE	MANUFACTURER
80205	NATIONAL AEROSPACE STANDARDS COMMITTEE AEROSPACE INDUSTRIES ASSOCIATION OF AMERICA INC 1725 DE SALES NW WASHINGTON, DC 20036
81349	MILITARY SPECIFICATIONS
81640	EATON CORP CUTLER-HAMMER GROUP 2074 WHITFIELD AVE E SARASOTA, FL 33578
82877	ROTRON INC 7-9 HASBROUCK LANE WOODSTOCK, NY 12498
84411	TRW INC TRW ELECTRONICS COMPONENTS DIV TRW CAPACITORS 301 W O ST OGALLALA, NE 69153
86577	PRECISION METAL PRODUCTS OF MALDEN INC 41 ELM STREET STONEHAM, MA 02180
88245	LITTON SYSTEMS INC USECO DIV 13536 SATICOY ST VAN NUYS, CA 91409
90201	MALLORY CAPACITOR CO DIV OF P R MALLORY AND CO INC 4760 KENTUCKY AVE INDIANAPOLIS, IN 46206
91886	MALCO A MICRODOT CO 12 PROGRESS DR MONTGOMERYVILLE, PA 18936
92702	IMC MAGNETICS CORP EASTERN DIVISION 570 MAIN ST WESTBURY, LI, NY 11591
95238	CONTINENTAL CONNECTOR CORP 34-63 56TH ST WOODSIDE, NY 11377
95987	WECKESSER CO INC 4444 WEST IRVINE PARK RD CHICAGO, IL 60641
96906	MILITARY STANDARDS
97902	VERSA PRODUCTS CO INC 150 COOLIDGE AVE ENGLEWOOD, NJ 07631
98291	SEALECTRO CORP 225 HOYT MAMARONECK, NY 10544
98410	ETC DIV OF INTERNATIONAL TELEPHONE AND TELEGRAPH CO 29000 AURORA RD SOLON, OH 44139
98963	WILKERSON CORP 1201 W MANSFIELD AVE ENGLEWOOD, CO 80110
99515	ELECTRON PRODUCTS INC SUBSIDIARY OF W-K INDUSTRIES 1960 WALKER AVE MONROVIA, CA 91016

DETAILED PARTS LIST PART NUMBER	OPTIONAL MFR PART NUMBER	OPTL MFR CODE
BS0S440-30	34NBSEXR30	86577
B405-170	4TJ170	28968
B605-4	6TJ4	28968
CL631F	SN86083J	01295
CL632F	SN86084J	01295
CL634F	SN86986J	01295
DM54L04J	SN54L04J00	01295
DZ40506J	SZG233-209	04713
DZ40506M	SZG233-212	04713
DZ40506R	SZG233-216	04713
DZ740609G	SZG201-253	04713
ER2055S	NCR2055	42470
	NC7055LM	54335
	NC7055LMB	54335
E2641-2	DZ760408A	12954
	SZG218-203	04713
E2645-2	DZ760303C	12954
	SZG218-207	04713
E2646-2	DZ760324A	12954
	SZG218-208	04713
E2651-2	DZ7603248	12954
	SZG218-213	04713
GE10-1	ML124-1	19647
	ML131-1	19647
IM7114L2CJN	MCM21L14-20	04713
	2114AL4	34649
LM111H	A111H	07263
	LM111H	34335
	16056	27014
MJ5416	MM5416	04713
	2N5416	21845
MS75089-20	SSD560	32159
	SWD560	72259
	15S561K	06560
	28046	03550
MS75089-23	SSD1000	32159
	SWD1000	72259
	15S102K	06560
	28049	03550
MU270	SDSW804	73293
M39016-9-024L	J412-26QL	11532
M7-298-116	ZA7314-116	12406
	2D1-333E	99515
M7-298-136	ZA7314-136	12406
	2D1-824E	99515
M7-298-48	D4-103E	99515
	ZA7314-48	12406
M7-298-99	D2-274E	99515
	ZA7314-99	12406
NA4-0-100PMD	ML124-0-100PMD	19647
	PME55S0-100T0PMD	03888
	5033R0-100T0PMD	19701
NA4-0-121PMD	ML124-0-121PMD	19647
	PME55S0-121T0PMD	03888
	5033R0-121T0PMD	19701

Optional Part Number Sources
Table 5-2

DETAILED PARTS LIST PART NUMBER	OPTIONAL MFR PART NUMBER	OPTL MFR CODE
NA4-0-150PMD	ML124-0-150PMD	19647
	PME55S0-150TOPM D	03888
	5033R0-150TOPMD	19701
NA4-0-165PMD	ML124-0-165PMD	19647
	PME55S0-165TOPM D	03888
	5033R0-165TOPMD	19701
NA4-0-174PMD	ML124-0-174PMD	19647
	PME55S0-174TOPM D	03888
	5033R0-174TOPMD	19701
NA4-0-200PMD	ML124-0-200PMD	19647
	PME55S0-200TOPM D	03888
	5033R0-200TOPMD	19701
NA4-0-221PMD	ML124-0-221PMD	19647
	PME55S0-221TOPM D	03888
	5033R0-221TOPMD	19701
NA4-0-261PMD	ML124-0-261PMD	19647
	PME55S0-261TOPM D	03888
	5033R0-261TOPMD	19701
NA4-0-332PMD	ML124-0-332PMD	19647
	PME55S0-332TOPM D	03888
	5033R0-332TOPMD	19701
NA4-0-340PMD	ML124-0-340PMD	19647
	PME55S0-340TOPM D	03888
	5033R0-340TOPMD	19701
NA4-0-402PMD	ML124-0-402PMD	19647
	PME55S0-402TOPM D	03888
	5033R0-402TOPMD	19701
NA4-0-412PMD	ML124-0-412PMD	19647
	PME55S0-412TOPM D	03888
	5033R0-412TOPMD	19701
NA4-0-442PMD	ML124-0-442PMD	19647
	PME55S0-442TOPM D	03888
	5033R0-442TOPMD	19701
NA4-0-487PMD	ML124-0-487PMD	19647
	PME55S0-487TOPM D	03888
	5033R0-487TOPMD	19701
NA4-0-499PMD	ML124-0-499PMD	19647
	PME55S0-499TOPM D	03888
	5033R0-499TOPMD	19701
NA4-100PMD	ML124-100PMD	19647
	PME55S100TOPMD	03888
	5033R100TOPMD	19701
NA4-1000PMD	ML124-1000PMD	19647
	PME55S1000TOPMD	03888
	5033R1000TOPMD	19701
NA4-10000PMD	ML124-10000PMD	19647
	PME55S10000TOPM D	03888
	5033R10000TOPMD	19701
NA4-10500PMD	ML124-10500PMD	19647
	PME55S10500TOPM D	03888
	5033R10500TOPMD	19701
NA4-11000PMD	ML124-11000PMD	19647
	PME55S11000TOPM D	03888
	5033R11000TOPMD	19701

Optional Part Number Sources
Table 5-2 (cont)

DETAILED PARTS LIST PART NUMBER	OPTIONAL MFR PART NUMBER	OPTL MFR CODE
NA4-11300PMD	ML124-11300PMD	19647
	PME55S11300T0PMD	03888
	5033R11300T0PMD	19701
NA4-11800PMD	ML124-11800PMD	19647
	PME55S11800T0PMD	03888
	5033R11800T0PMD	19701
NA4-1300PMD	ML124-1300PMD	19647
	PME55S1300T0PMD	03888
	5033R1300T0PMD	19701
NA4-13000PMD	ML124-13000PMD	19647
	PME55S13000T0PMD	03888
	5033R13000T0PMD	19701
NA4-150PMD	ML124-150PMD	19647
	PME55S150T0PMD	03888
	5033R150T0PMD	19701
NA4-1500PMD	ML124-1500PMD	19647
	PME55S1500T0PMD	03888
	5033R1500T0PMD	19701
NA4-17400PMD	ML124-17400PMD	19647
	PME55S17400T0PMD	03888
	5033R17400T0PMD	19701
NA4-1820PMD	ML124-1820PMD	19647
	PME55S1820T0PMD	03888
	5033R1820T0PMD	19701
NA4-18200PMD	ML124-18200PMD	19647
	PME55S18200T0PMD	03888
	5033R18200T0PMD	19701
NA4-20PMD	PME55S20T0PMD	03888
	5033R20T0PMD	19701
NA4-20-50PMD	PME55S20-50T0PMD	03888
	5033R20-50T0PMD	19701
NA4-200PMD	ML124-200PMD	19647
	PME55S200T0PMD	03888
	5033R200T0PMD	19701
NA4-2000PMD	ML124-2000PMD	19647
	PME55S2000T0PMD	03888
	5033R2000T0PMD	19701
NA4-20000PMD	ML124-20000PMD	19647
	PME55S20000T0PMD	03888
	5033R20000T0PMD	19701
NA4-21000PMD	ML124-21000PMD	19647
	PME55S21000T0PMD	03888
	5033R21000T0PMD	19701
NA4-2210PMD	ML124-2210PMD	19647
	PME55S2210T0PMD	03888
	5033R2210T0PMD	19701
NA4-2260PMD	ML124-2260PMD	19647
	PME55S2260T0PMD	03888
	5033R2260T0PMD	19701
NA4-23200PMD	ML124-23200PMD	19647
	PME55S23200T0PMD	03888
	5033R23200T0PMD	19701
NA4-23700PMD	ML124-23700PMD	19647
	PME55S23700T0PMD	03888
	5033R23700T0PMD	19701
NA4-243PMD	ML124-243PMD	19647
	PME55S243T0PMD	03888
	5033R243T0PMD	19701

Optional Part Number Sources
Table 5-2 (cont)

DETAILED PARTS LIST PART NUMBER	OPTIONAL MFR PART NUMBER	OPTL MFR CODE
NA4-2430PMD	ML124-2430PMD	19647
	PME55S2430TOPMD	03888
	5033R2430TOPMD	19701
NA4-24300PMD	ML124-24300PMD	19647
	PME55S24300TOPMD	03888
	5033R24300TOPMD	19701
NA4-255PMD	ML124-255PMD	19647
	PME55S255TOPMD	03888
	5033R255TOPMD	19701
NA4-25500PMD	ML124-25500PMD	19647
	PME55S25500TOPMD	03888
	5033R25500TOPMD	19701
NA4-2610PMD	ML124-2610PMD	19647
	PME55S2610TOPMD	03888
	5033R2610TOPMD	19701
NA4-26100PMD	ML124-26100PMD	19647
	PME55S26100TOPMD	03888
	5033R26100TOPMD	19701
NA4-2670PMD	ML124-2670PMD	19647
	PME55S2670TOPMD	03888
	5033R2670TOPMD	19701
NA4-27400PMD	ML124-27400PMD	19647
	PME55S27400TOPMD	03888
	5033R27400TOPMD	19701
NA4-2800PMD	ML124-2800PMD	19647
	PME55S2800TOPMD	03888
	5033R2800TOPMD	19701
NA4-287PMD	ML124-287PMD	19647
	PME55S287TOPMD	03888
	5033R287TOPMD	19701
NA4-294PMD	ML124-294PMD	19647
	PME55S294TOPMD	03888
	5033R294TOPMD	19701
NA4-301PMD	ML124-301PMD	19647
	PME55S301TOPMD	03888
	5033R301TOPMD	19701
NA4-3010PMD	ML124-3010PMD	19647
	PME55S3010TOPMD	03888
	5033R3010TOPMD	19701
NA4-30100PMD	ML124-30100PMD	19647
	PME55S30100TOPMD	03888
	5033R30100TOPMD	19701
NA4-3090PMD	ML124-3090PMD	19647
	PME55S3090TOPMD	03888
	5033R3090TOPMD	19701
NA4-33200PMD	ML124-33200PMD	19647
	PME55S33200TOPMD	03888
	5033R33200TOPMD	19701
NA4-3570PMD	ML124-3570PMD	19647
	PME55S3570TOPMD	03888
	5033R3570TOPMD	19701
NA4-36500PMD	ML124-36500PMD	19647
	PME55S36500TOPMD	03888
	5033R36500TOPMD	19701
NA4-38300PMD	ML124-38300PMD	19647
	PME55S38300TOPMD	03888
	5033R38300TOPMD	19701
NA4-3920PMD	ML124-3920PMD	19647
	PME55S3920TOPMD	03888
	5033R3920TOPMD	19701

Optional Part Number Sources
Table 5-2 (cont)

DETAILED PARTS LIST PART NUMBER	OPTIONAL MFR PART NUMBER	OPTL MFR CODE
NA4-40200PMD	ML124-40200PMD	19647
	PME55S40200T0PMD	03888
	5033R40200T0PMD	19701
NA4-4530PMD	ML124-4530PMD	19647
	PME55S4530T0PMD	03888
	5033R4530T0PMD	19701
NA4-47500PMD	ML124-47500PMD	19647
	PME55S47500T0PMD	03888
	5033R47500T0PMD	19701
NA4-4870PMD	ML124-4870PMD	19647
	PME55S4870T0PMD	03888
	5033R4870T0PMD	19701
NA4-48700PMD	ML124-48700PMD	19647
	PME55S48700T0PMD	03888
	5033R48700T0PMD	19701
NA4-499PMD	ML124-499PMD	19647
	PME55S499T0PMD	03888
	5033R499T0PMD	19701
NA4-4990PMD	ML124-4990PMD	19647
	PME55S4990T0PMD	03888
	5033R4990T0PMD	19701
NA4-49900PMD	ML124-49900PMD	19647
	PME55S49900T0PMD	03888
	5033R49900T0PMD	19701
NA4-5110PMD	ML124-5110PMD	19647
	PME55S5110T0PMD	03888
	5033R5110T0PMD	19701
NA4-549PMD	ML124-549PMD	19647
	PME55S549T0PMD	03888
	5033R549T0PMD	19701
NA4-5620PMD	ML124-5620PMD	19647
	PME55S5620T0PMD	03888
	5033R5620T0PMD	19701
NA4-60400PMD	ML124-60400PMD	19647
	PME55S60400T0PMD	03888
	5033R60400T0PMD	19701
NA4-6650PMD	ML124-6650PMD	19647
	PME55S6650T0PMD	03888
	5033R6650T0PMD	19701
NA4-66500PMD	ML124-66500PMD	19647
	PME55S66500T0PMD	03888
	5033R66500T0PMD	19701
NA4-68100PMD	ML124-68100PMD	19647
	PME55S68100T0PMD	03888
	5033R68100T0PMD	19701
NA4-7150PMD	ML124-7150PMD	19647
	PME55S7150T0PMD	03888
	5033R7150T0PMD	19701
NA4-750PMD	ML124-750PMD	19647
	PME55S750T0PMD	03888
	5033R750T0PMD	19701
NA4-7870PMD	ML124-7870PMD	19647
	PME55S7870T0PMD	03888
	5033R7870T0PMD	19701
NA4-866PMD	ML124-866PMD	19647
	PME55S866T0PMD	03888
	5033R866T0PMD	19701
NA4-909PMD	ML124-909PMD	19647
	PME55S909T0PMD	03888
	5033R909T0PMD	19701

Optional Part Number Sources
Table 5-2 (cont)

DETAILED PARTS LIST PART NUMBER	OPTIONAL MFR PART NUMBER	OPTL MFR CODE
NA4-9090PMD	ML124-9090PMD	19647
	PME55S9090T0PMD	03888
	5033R9090T0PMD	19701
NA4-95300PMD	ML124-95300PMD	19647
	PME55S95300T0PMD	03888
	5033R95300T0PMD	19701
RS1741	SG86049	01295
	S24358	03877
R00-01LP0	R0001L00	98963
	364-1P0-60PS1	79227
SD20218	SN23801J	01295
SD70578	SN47551J	01295
SL20447	LS2275	34335
	SSS725	06665
SNJ54LS00J	DM54LS00J883	27014
	HL64089	07263
	SD76593	27014
	SNJ54LS00J	04713
	SN58055	01295
	S54LS00F883B	18324
	54LS00DMQB	07263
SNJ54LS04J	DM54LS04J883	27014
	HL64090	07263
	SNJ54LS04J	04713
	SN58056	01295
	S54LS04F883B	18324
	54LS04DMQB	07263
SNJ54LS10J	DM54LS10J883	27014
	HL64091	07263
	SNJ54LS10J	04713
	SN58057	01295
	S54LS10F883B	18324
	54LS10DMQB	07263
SNJ54LS123J	SNJ54LS123J	04713
SNJ54LS157J	DH12461	34335
	DM54LS157J883	27014
	SNJ54LS157J	04713
	SN54LS157JB	34335
	SN58067	01295
	S54LS157F883B	18324
	54LS157DMQB	07263
SNJ54LS244J	54LS244BRBJC	04713
SNJ54LS373J	DH14161	34335
	SC27572LH	04713
	SNJ54LS373J	04713
	SN54LS373JB	34335
SN13717	SC27531LH1	04713
SN23805J	SC27516LH	04713
	SD10132	27014
SN23806J	SC27517LH	04713
	SD10856	27014
SN23807J	SC27518LH	04713
	SD72133	27014
SN23808J	SC27519LH	04713
	SD10857	27014
SN23809J	SC27521LH	04713
	SD10859	27014
SN23810J	SC27522LH	04713
	SD10860	27014
SN24244J	SD70231	27014
	SN24224	01295
SN24336J	SC27520LH	04713
	SD10858	27014
SN24772	SC27555LH	04713

Optional Part Number Sources
Table 5-2 (cont)

DETAILED PARTS LIST PART NUMBER	OPTIONAL MFR PART NUMBER	OPTL MFR CODE
SN34251J	CK805	18324
	SD20989	27014
SN48680J	SD70906B	27014
SN54H04J	DM4H04J883B	27014
	DM54H04J	27014
	SNC54H04J	01295
	SNJ54H04J	01295
	54H04BCBJC	04713
	54H04CCBJC	04713
SN54H05J	DM54H05J	27014
	SNC54H05J	01295
	SNJ54H05J	01295
	54H05DM	07263
	54H05DMQB	07263
SN54H22J	DM54H22J	27014
	DM54H22J883B	27014
	SNC54H22J	01295
	SNJ54H22J	01295
	54H22BCBJC	04713
	54H22CCBJC	04713
SN54H62J	SNC54H62J	01295
	SNJ54H62J	01295
SN54H74J	S54H74F	18324
SN54123J00	MC54123L	04713
SN54132J00	DM54132J	27014
	MC54132L	04713
	S54132F	18324
SN54155J	MC54155L	04713
SN54197J	SNC54197J	01295
	SNJ54197J	91285
SN5427J	DM5427J	27014
	DM5427J883B	27014
	SNC5427J	01295
	SNJ5427J	01295
	5427DM	07263
	5427DMQB	07263
SN54293J00	MC54293L	04713
SN54393J	SNC54393J	01295
	SNJ54393J	01295
SN5483AJ00	5483ADM	07263
SN74S197N	SNC54S197J	01295
	SNJ54S197J	01295
	SN54S197J	01295
SP7-105-1-5	M12-145-37	54904
SP7-205-1-5	M12-145-41	54904
SP7-334-9-5	M12-117-31	54904
SP7-474-9-5	M12-117-33	54904
SS-010-17	TM259-220	01295
SS-010-34	TM259-5600	01295
S440-3C	440NKC091C	86577
S632-0C	27SWX632-2	56878
	632NKC032C	86577
S832-3C	27SWX832-5	56878
	832NKC091C	86577
TNS105X075KI	M39003-02-0050	81349
	162D105X9075CA2	56289
	172D105X9075L2	56289

Optional Part Number Sources
Table 5-2 (cont)

DETAILED PARTS LIST PART NUMBER	OPTIONAL MFR PART NUMBER	OPTL MFR CODE
TNS106X020KI	CNS106L020KI	26769
	D10ES20KI	12954
	TAE106K020P1C	90201
	T324C106K020AS	31433
	162D106X9020DD2	56289
TVA1578	BRDG10029	09023
UTG1533	SA7394	14099
UZ6110	JAN1N4954	14099
W650B1A106F	CA8315-2	12406
011-1015-000319	SFU6	04013
	4153	12615
013-1002-000319	SS3-24	04013
	26-113	12615
	571-4029-04-001	71279
	9-319	
014-1001-000319	SOS3	04013
	52-190	12615
014-1004-000319	26-220	12615
1N5550	1N5550	12969
1N5618	1N5618	12969
1N823	1N823	04713
	1N823	24444
	1N823	03877
	1N823	07910
1N941B	1N941B	24444
	1N941B	03877
	1N941B	07910
	1N941B	04713
1006-5	M1-623-5	12615
	13654E	88245
	229-1032-000340	98291
	460-2971-02-03-00	71279
10325DAP	7717-16DAP	13103
137D566X9075T2	TE678L560KPG3	05079
2N2102	2N2102	49956
2N2222A	2N2222A	03877
	2N2222A	01295
	2N2222A	04713
2N2907A	2N2907A	01295
	2N2907A	04713
	2N2907A	07263
2N4858	FN3419	17856
	2N4858	15818
	2N4858	04713
2N6274	79SE149	21845
29-250	20112-250	06540
31161	AA421-10	98410
314A102	14-13-2R1K	29604
	760-1R1K	11236
	899-1R1K	73138
314A222	14-13-2R2-2K	29604
	760-1R2-2K	11236
	899-1R2-2K	73138
316A103	16-15-1R10K	29604
	761-1R10K	11236
	898-1R10K	73138

DETAILED PARTS LIST PART NUMBER	OPTIONAL MFR PART NUMBER	OPTL MFR CODE
316A222	16-15-1R2-2K	29604
	761-1R2-2K	11236
	898-1R2-2K	73138
316A332	16-15-1R3-3K	29604
	761-1R3-3K	11236
	898-1R3-3K	73138
316A472	16-15-1R4-7K	29604
	761-1R4-7K	11236
	898-1R4-7K	73138
316A682	16-15-1R6-8K	29604
	761-1R6-8K	11236
	898-1R6-8K	73138
324607	49512	98410
351-21-05-021	410JJ5PS1	75382
351-21-06-021	410JJ6PS1	75382
4005882-3	516-5033-701	31413
	735-0021-000	03877
43-03-2	KX03-2	53174
43-66-2	KX66-2	53174
510527-11	040-0103-000AND	05041
	028-0067-139	
	302-0006-002AND	31413
	010-8501-503	
5266C	5266N	74545
57-20240-2	57-20240-2	71785
65-175	476042	82877
700685	DAC12QZB1N	13919
735-0009-000	028-0067-002AND	05041
	040-0045-000	
	21-20502-105AND	91886
	22-20000-000	
	302-5060-000	31413
	511007-33	16512
735-0010-000	028-0067-002AND	05041
	040-0045-000	
	21-20502-105AND	91886
	22-20000-00	
	302-5061-000	31413
	511008-33	16512
970-3575-0	254-2334	27802

Optional Part Number Sources
Table 5-2 (cont)

NUMERICAL INDEX

PART NUMBER	AIRLINE PART NO.	FIG. ITEM	TTL REQ
BSOS440-30		11 1D	4
B2ME		1 7	1
B4FT1-7		2 22	1
B400-1-4KN		7 20	1
B400-2-2KN		1 8	7
		7 18	
		8 18	
		15 9	
B400-2-4KM		1 9	2
B400-3TMTKN		15 8	1
B405-170		1 10	20
		1 15	
		2 23	
		15 10	
B5691-6		9 7	2
B5805		9 8	1
B600-2-2KN		7 17	7
		8 17	
		8 20	
B600-2-4KM		7 19	2
		8 19	
B600KN8-2		2 75	2
B605-4		2 24	16
		7 21	
		8 21	
CFHC440-5		3 1B	5
CK12BX101K		24 5	3
		25 4	
CK12BX102K		13 4	4
		22 39	
		26 15	
		27 15	
CK12BX103K		24 9	2
CK12BX221K		26 14	2
		27 14	
CK12BX222K		24 6	1
CK12BX332K		26 16	2
		27 16	
CK13BX103K		25 3	3
		26 17	
		27 17	

PART NUMBER	AIRLINE PART NO.	FIG.	ITEM	TTL REQ
CK14BR104K		4	8	118
		6	4	
		17	5	
		18	5	
		19	5	
		22	4	
		24	8	
		25	2	
		26	18	
		27	19	
CK14BR224K		24	7	1
CK14BX223K		27	18	1
CK15BR154K		12	4	1
CK15BR474K		26	4	4
		27	4	
CK16BR474K		26	20	2
		27	21	
CL630F		17	10	6
		18	8	
		24	29	
CL631F		17	17	10
		18	7	
		19	18	
		24	34	
CL632F		24	18	1
CL634F		17	18	3
		18	10	
CL67BE150MPG		4	9	
		21	14	1
CL67BE271MPG		12	5	1
CL67BE330MPG		17	6	8
		18	6	
		19	6	
CL67BG100MPG		25	5	1
CL67BG181MPG		26	27	4
		27	28	
CL67BG220MPG		14	16	16
		22	3	5
		24	10	
		26	26	
		27	27	
CL67BH151MPG		22	5	1
CL67BJ050MPG		22	11	1
CL67BJ100MPG		14	17	2

NUMERICAL INDEX

PART NUMBER	AIRLINE PART NO.	FIG. ITEM	TTL REQ
CL67BL560MPG		11 10	2
CL67BN220MPG		12 3	1
CS0S440-6		3 1C	8
CS753		6 11	4
CTS206-005		25 14	1
CTS206-008		21 18	4
DL1-156P		3 40B	1
DL1-156RW4		3 40C	2
		9 3	
DM54L04J		22 30	1
DZ40506J		14 39	1
DZ40506M		14 40	1
DZ40506R		14 41	1
DZ740609G		14 38	1
ER2055S		23 25	2
E2641-2		22 21	1
E2645-2		26 47	2
		27 47	
E2646-2		14 35	1
E2651-2		14 36	3
		22 22	
FHN20G		16 3	1
FHS032-8		11 1H	1
FHS632-12		11 1C	3
FHS632-6		13 1D	1
F02B125V3AS		2 37	1
F02B250V11-2AS		2 36	1
F02B250V2AS		3 40A	2
GE10-1		26 99	4
		27 101	
G51HCBLACK		2 71	2
HACP24X0-030		3 4	2
HDJA		3 40Q	2
HU8470-1-500AL		16 2A	1
H314		11 7	1
H321-1		12 12	1
H654		11 8	1
IM7114L2CJN		20 13	8
		23 23	
JANTX1N750A		23 41	1
JANTX2N3421		14 22	7

NUMERICAL INDEX

PART NUMBER	AIRLINE PART NO.	FIG. ITEM	TTL REQ
JAN1N4148-1		12 21	76
		14 29	
		21 15	
		22 6	
		23 40	
		26 46	
		27 46	
JAN2N2946A		26 45	6
		27 45	
JAN2N4858		26 41	2
		27 41	
JAN2N4860		26 40	12
		27 40	
JAN2N718A		14 24	9
		26 43	
		27 43	
LH0023CG		20 18	11
		26 34	
		27 34	
LM111H		26 30	4
		27 31	
MJ5416		14 28	1
MMM14PGDSK		3 40F	1
MMM14SGDS		13 9A	1
MMM26PGDSK		3 40E	2
MMM75PGDSK		3 40G	1
MMM75SGDS		11 6A	1
MS15795-802		2 65	18
		3 30	
MS15795-803		2 61	67
		4 45	
		9 15	
		11 18	
		14 6	
		15 24	
MS15795-805		2 69	23
		11 12	
		12 29	
		13 10	
		16 6	
MS15795-807		1 13	17
		2 55	
MS15795-808		2 50	8
		11 28	

PART NUMBER	AIRLINE PART NO.	FIG.	ITEM	TTL REQ
MS16535-22		10	15	100
MS16995-25		2	57	8
MS17172-8		12	8	6
MS20470AD5-5		11	1G	2
MS21042L06		2	33	12
		11	11	
		15	20	
		26	7	
		27	7	
MS21042L3		11	29	1
MS21919DG16		2	80	1
MS24693C272		2	52	10
MS24693C4		2	47	4
MS24693C48		2	51	6
MS246930-72		2	81	1
MS25237-387		3	13	14
MS28775-113		7	15	2
		8	15	
MS35338-134		2	64	22
		3	25	
		11	35	
MS35338-135		2	60	75
		3	20	
		4	44	
		9	14	
		11	19	
		12	27	
		14	5	
		15	23	
MS35338-136		2	68	40
		9	12	
		10	13	
		12	28	
		13	11	
		16	7	
MS35338-137		1	12	58
		2	54	
		7	14	
		8	14	
MS35338-138		2	49	17
		7	13	
		8	13	
		11	27	
		12	24	

PART NUMBER	AIRLINE PART NO.	FIG.	ITEM	TTL REQ
MS35431-3		3	8	16
		9	9	
		11	6E	
		12	30	
		13	9C	
		26	8	
		27	8	
MS35431-5		2	79	1
MS35649-204		2	82	1
MS35649-224		2	66	22
		3	26	
		11	36	
MS35649-244		2	62	14
		9	16	
MS35649-264		2	70	15
		12	32	
		13	12	
MS51957-12		2	74	4
MS51957-123		2	67	2
MS51957-126		2	58	4
MS51957-13		11	20	4
MS51957-14		3	21	25
		11	30	
		15	21	
MS51957-15		4	42	24
		11	25	
MS51957-16		2	59	37
		7	10	
		8	10	
		15	22	
MS51957-17		4	43	6
		14	4	
MS51957-19		9	13	4
MS51957-27		10	12	17
		16	9	
MS51957-30		9	10	8
MS51957-31		2	32	17
		12	26	
		15	19	
MS51957-44		1	11	10
		2	53	
MS51957-45		2	56	3
MS51957-5		3	27	16
MS51957-7		2	63	2

PART NUMBER	AIRLINE PART NO.	FIG. ITEM	TTL REQ
MS51958-62		11 26	3
		12 23	
MS51958-63		2 48	4
MS75089-20		12 22	1
MS75089-23		22 44	4
		23 10	
MS9461-07		7 4A	24
		8 4A	
MU270		26 39	2
		27 39	
M24066-2-146		11 1F	1
M38510-30001BCX		23 15	10
M38510-30003BCX		23 16	6
M38510-30005BCX		23 17	5
M38510-30007BCX		20 10	6
		21 23	
		23 18	
M38510-30102BCX		23 20	2
M38510-30301BCX		20 15	8
		21 29	
		23 13	
M38510-30302BCX		21 26	2
		23 14	
M38510-30502BCX		21 21	2
		23 19	
M38510-30703BEX		20 11	1
M38510-30903BEX		23 22	4
M38510-31401BEX		23 21	3
M39003-01-2356		14 9	4
M39006-09-8260		20 26	1
M39006-09-8283		20 25	2
M39014/05-2116		20 29	3
M39014-01-1299		23 44	1
M39014-01-1313		14 10	6
M39014-01-1317		14 11	2
M39014-01-1553		20 27	59
		21 13	
		23 8	
		26 24	
		27 25	
M39014-02-1292		14 12	1
M39014-02-1298		14 13	1
M39014-02-1302		14 14	1
M39014-02-1310		14 15	9
		23 9	

NUMERICAL INDEX

PART NUMBER	AIRLINE PART NO.	FIG. ITEM	TTL REQ
M39014-02-1415		26 19	4
		27 20	
M39014-05-2043		20 28	3
M39016-13-082L		26 52	2
		27 52	
M39016-9-024L		26 50	4
		27 50	
M39016-9-052L		26 51	2
		27 51	
M39018-01-0731		23 6	2
M45938-1-16		11 1E	4
M45938-1-3		13 1C	4
M45938-1-5		11 1B	22
M5302A36M		5 3A	1
M55302-55A54M		3 40M	1
M55302-55A56M		3 40P	1
M55302-55A70M		11 6C	1
M55302-61A36		4 4	1
M55302-61A40		4 5	1
M55302-61A44		4 6	1
M55302-62A40M		3 37A	1
M55302-62A44M		3 38A	1
M7-298-116		26 21	2
		27 22	
M7-298-136		23 7	2
M7-298-48		6 3	2
M7-298-99		13 3	1
NAS1745-2		3 40L	12
NAS1745-3		3 40K	2
NAS620C10L		12 25	1
NAS620C2		11 34	4
NAS620C4		11 17	8
NAS620C4L		3 31	13
NAS620C416L		13 8	1
NAS620C6		9 11	24
		10 14	
NAS620C6L		26 9	4
		27 9	
NAS671C4		4 46	11
		14 7	
NA4-0-100PMD		14 68	24
		26 87	
		27 89	
NA4-0-121PMD		26 88	2
		27 90	

PART NUMBER	AIRLINE PART NO.	FIG. ITEM	TTL REQ
NA4-0-147PMD		27 91	1
NA4-0-150PMD		14 69	4
		26 89	
		27 122	
NA4-0-165PMD		26 90	2
		27 92	
NA4-0-174PMD		14 70	1
NA4-0-200PMD		23 32	8
		26 91	
		27 93	
NA4-0-221PMD		26 92	2
		27 94	
NA4-0-261PMD		26 93	2
		27 95	
NA4-0-332PMD		26 116	2
		27 118	
NA4-0-340PMD		27 96	1
NA4-0-402PMD		26 94	1
NA4-0-412PMD		26 95	2
		27 97	
NA4-0-442PMD		26 96	2
		27 98	
NA4-0-487PMD		26 97	2
		27 99	
NA4-0-499PMD		26 98	16
		27 100	
NA4-100PMD		14 44	3
		20 22	
		26 54	
NA4-1000PMD		14 47	7
		26 60	
		27 61	
NA4-10000PMD		14 61	37
		26 71	
		27 72	
NA4-10500PMD		26 72	2
		27 73	
NA4-11000PMD		27 74	1
NA4-11300PMD		14 62	1
NA4-11800PMD		14 63	1
NA4-1300PMD		14 48	7
NA4-13000PMD		20 24	3
NA4-150PMD		27 54	1
NA4-1500PMD		14 49	1

PART NUMBER	AIRLINE PART NO.	FIG.	ITEM	TTL REQ
NA4-17400PMD		14	64	1
NA4-1820PMD		14	50	5
NA4-18200PMD		20	23	3
NA4-20-50PMD		14	43	1
NA4-20PMD		14	42	2
NA4-200PMD		26	55	3
		27	55	
NA4-2000PMD		14	51	6
		26	61	
		27	62	
NA4-20000PMD		14	65	52
		22	46	
		24	12	
		26	73	
		27	75	
NA4-21000PMD		14	66	1
NA4-2210PMD		26	62	2
		27	63	
NA4-2260PMD		14	52	1
NA4-23200PMD		26	74	2
		27	76	
NA4-23700PMD		27	77	1
NA4-243PMD		27	56	1
NA4-2430PMD		14	53	3
		26	63	
		27	64	
NA4-24300PMD		26	75	1
NA4-255PMD		26	56	1
NA4-25500PMD		26	76	2
		27	78	
NA4-2610PMD		14	54	1
NA4-26100PMD		27	79	1
NA4-2670PMD		27	65	1
NA4-27400PMD		27	80	1
NA4-2800PMD		27	66	2
NA4-287PMD		19	9	2
NA4-294PMD		18	18	1
NA4-301PMD		17	7	1
NA4-3010PMD		14	55	4
NA4-30100PMD		14	67	2
		27	81	
NA4-3090PMD		26	64	2
		27	67	
NA4-33200PMD		26	78	4
		27	82	

NUMERICAL INDEX

PART NUMBER	AIRLINE PART NO.	FIG. ITEM	TTL REQ
NA4-3570PMD		14 56	1
NA4-36500PMD		26 79	2
		27 83	
NA4-38300PMD		26 80	1
NA4-3920PMD		26 65	2
		27 68	
NA4-40200PMD		26 81	4
		27 84	
NA4-4530PMD		26 66	1
NA4-47500PMD		26 82	1
NA4-4870PMD		26 67	3
		27 69	
NA4-48700PMD		27 85	
NA4-499PMD		14 45	1
NA4-4990PMD		24 13	9
		26 68	
		27 70	
NA4-49900PMD		26 83	24
		27 86	
NA4-5110PMD		23 30	16
		26 77	
		27 111	
NA4-549PMD		26 57	2
		27 57	
NA4-5620PMD		26 69	2
NA4-60400PMD		23 31	1
NA4-6650PMD		14 57	1
NA4-66500PMD		26 84	1
NA4-68100PMD		26 85	2
		27 87	
NA4-7150PMD		14 58	2
		24 38	
NA4-750PMD		14 46	3
		26 58	
		27 58	
NA4-7870PMD		14 59	1
NA4-866PMD		27 59	1
NA4-909PMD		26 59	2
		27 60	
NA4-9090PMD		14 60	3
		26 70	
		27 71	
NA4-95300PMD		26 86	5
		27 88	

PART NUMBER	AIRLINE PART NO.	FIG. ITEM	TTL REQ
N04NYLFLWSHR		3 39	13
PFC2-832-72		10 8A	4
		10 9A	
P5001-8LM11-2		15 7	2
RCR05G102JS		23 35	1
RCR05G103JS		20 20	25
		21 9	
		23 38	
RCR05G112JS		23 36	2
RCR05G222JS		23 37	2
RCR05G241JS		21 7	13
		23 34	
RCR05G302JS		21 11	1
RCR05G303JS		23 39	4
RCR05G622JS		21 10	1
RCR07G101JR		14 80	5
		26 102	
		27 104	
RCR07G102JR		4 22	57
		6 10	
		13 6	
		14 85	
		20 21	
		21 8	
		22 13	
		24 11	
		25 8	
		26 103	
		27 105	
RCR07G103JR		14 89	3
		26 108	
		27 110	
RCR07G105JR		14 95	1
RCR07G121JR		14 81	7
RCR07G122JR		21 12	5
		26 104	
		27 106	
RCR07G132JR		14 86	2
RCR07G133JR		14 90	1
RCR07G151JR		4 18	13
		21 6	
RCR07G152JR		26 105	2
		27 107	
RCR07G182JR		14 87	10
RCR07G184JR		14 93	1
RCR07G202JR		14 88	3
		25 9	

NUMERICAL INDEX

PART NUMBER	AIRLINE PART NO.	FIG. ITEM	TTL REQ
RCR07G203JR		22 14	2
RCR07G220JR		26 100	2
		27 102	
RCR07G221JR		4 19	1
RCR07G222JR		4 23	31
		25 11	
RCR07G223JR		14 91	1
RCR07G224JR		14 94	1
RCR07G241JR		14 82	2
RCR07G331JR		14 83	1
RCR07G333JR		14 92	1
RCR07G391JR		4 20	26
		25 12	
RCR07G472JR		23 33	7
		25 10	
		26 106	
		27 108	
RCR07G510JR		14 79	40
		20 19	
		26 101	
		27 103	
RCR07G621JR		4 21	24
RCR07G622JR		26 107	4
		27 109	
RCR07G751JR		14 84	1
RCR07G821JR		19 7	16
RCR20G101JR		13 5	1
RCR20G154JR		14 78	
RCR20G471JR		12 19	1
RCR20G511JR		14 76	1
RCR20G621JR		14 77	1
RCR20G622JR		22 12	1
RCR20G751JR		12 39	1
RCR32G102JR		14 71	1
RCR32G222JR		14 72	1
RCR32G223JR		14 74	2
RCR32G243JR		14 75	2
RCR32G622JR		14 73	1
RCR32G913JR		12 38	1
RLR20C1201GR		26 114	2
		27 116	
RLR20C68R0GR		14 96	7
RL07S102G		17 8	42
		19 8	

PART NUMBER	AIRLINE PART NO.	FIG. ITEM	TTL REQ
RL07S103G		22 20	5
RL07S104G		22 19	1
RL07S113G		6 22	26
RL07S202G		22 17	1
RL07S203G		22 41	1
RL07S221G		14 98	2
RL07S222G		6 5	32
RL07S243G		6 21	4
RL07S510G		14 97	1
RL07S511G		22 16	1
RS1741		22 43	2
RWRW81U4R30F		26 112	4
		27 114	
RWR84S2R61FR		12 36	1
RWR84S2R74FR		12 37	1
RW67V560		11 41	2
RW69VR62		14 99	1
RW69V301		11 40	2
RW69V330		11 9	2
RW81UR120F		12 18	1
RW81U1R00F		26 110	4
		27 112	
RW81U1R30F		26 111	4
		27 113	
RW81U20R0F		26 113	4
		27 115	
R00-01LP0		15 6	2
SD20218		4 24	4
		22 26	
		25 25	
SD70578		21 28	3
		25 31	
SE26XF01		11 60	3
SH76296		26 37	2
		27 37	
SL20369		14 19	5
SL20447		26 31	2
		27 32	
SM1136		2- 27	4
SNJ54LS00J		20 5	9
		21 25	
SNJ54LS04J		20 6	4
		21 22	
SNJ54LS10J		20 9	4
		21 24	

NUMERICAL INDEX

PART NUMBER	AIRLINE PART NO.	FIG. ITEM	TTL REQ
SNJ54LS123J		20 17	3
SNJ54LS157J		20 14	1
SNJ54LS244J		20 8	17
		21 27	
		23 27	
SNJ54LS273J		20 12	5
		23 26	
SNJ54LS373J		23 24	2
SN13717		20 7	7
		21 19	
SN23805J		4 26	56
		6 12	
		17 12	
		18 15	
		22 23	
		24 22	
		25 17	
SN23806J		4 27	39
		6 18	
		17 9	
		18 16	
		19 11	
		24 25	
		25 20	
SN23807J		4 28	2
		22 38	
SN23808J		4 29	46
		6 19	
		17 13	
		18 14	
		19 19	
		22 28	
		24 19	
		25 19	
SN23809J		4 31	34
		17 11	
		18 12	
		19 14	
		22 24	
		25 21	
SN23810J		6 13	2
		17 15	
		24 28	

PART NUMBER	AIRLINE PART NO.	FIG.	ITEM	TTL REQ
SN24244J		17	16	30
		18	11	
		19	13	
SN24336J		4	30	11
		6	17	
		20	16	
		23	11	
		24	27	
		25	34	
SN24772		22	31	3
		25	23	
SN34251J		23	12	1
SN48680J		4	39	4
SN54H04J		22	42	4
SN54H05J		22	25	3
		24	32	
SN54H103J00		24	21	1
SN54H22J		6	15	6
SN54H62J		19	12	16
SN54H74J		24	20	1
SN54123J00		24	33	2
SN54132J00		22	27	2
		24	24	
SN54155J		4	36	2
SN54197J		24	16	2
SN5427J		4	40	10
		24	30	1
		25	18	
SN54293J00		24	23	5
SN5433J		22	29	3
		26	36	
		27	36	
SN54393J		24	15	3
SN5483AJ00		19	17	4
SN74S197N		24	37	2
SN87462J		22	32	2
SN89820J		4	33	1
SP7-105-1-5		26	12	2
		27	12	
SP7-205-1-5		26	13	4
		27	13	
SP7-334-9-5		26	10	2
		27	10	

NUMERICAL INDEX

PART NUMBER	AIRLINE PART NO.	FIG. ITEM	TTL REQ
SP7-474-9-5		20 30	9
		26 11	
		27 11	
SP753		5 4	4
SR7P2		16 5	1
SS-010-17		14 100	1
SS-010-34		14 101	1
SS400-61-4AN		15 11	1
SS402-61		2 35	2
		15 15	
SS5709H		14 25	1
SS600-61-4ANKN		2 31	1
SS600-61-6ANKN		2 30	3
		15 12	
SS602-61		2 34	3
		15 16	
S18429		4 13	25
		21 17	
		22 7	
		23 43	
S203BLACK		17 4	20
		18 4	
		19 4	
		22 35	
		23 3	
		24 4	
		25 37	
		26 3	
		27 3	
S203WHITE		20 3	4
		21 3	
S402-61F		15 13	1
S440-3C		15 1B	7
S602-61F		2 29	4
		15 14	
S632-0C		16 2B	1
S832-3C		2 1F	30
		2 6E	
TNS105X075KI		26 22	2
		27 23	
TNS106X020KI		26 23	2
		27 24	
TVA1318-5		11 21	1
TVA1319-9		12 2	1

PART NUMBER	AIRLINE PART NO.	FIG. ITEM	TTL REQ
TVA1578		12 6	1
T4115D		13 2	1
UTG1533		12 10	1
UZ6110		12 17	1
W101P6		3 5	2
		15 17	
W650B1A106F		26 28	2
		27 29	
000403-0100		17 3	4
		25 36	
		26 2	
		27 2	
011-1015-000319		13 1E	3
013-1002-000319		12 20	22
014-1001-000319		13 1B	7
014-1004-000319		11 1J	15
0164-3	SEE MS35338-134		
0164-5	SEE MS35338-135		
0164-7	SEE MS35338-136		
0164-8	SEE MS35338-137		
0164-9	SEE MS35338-138		
026-4005-000342		14 3	31
		20 4	
		26 5	
		27 5	
026982		15 4	1
030-2064-010		3 40J	156
0310-18	SEE MS21919DG16		
0370-16		7 8	2
		8 8	
0370-5	SEE 351-21-05-021		
0370-6	SEE 351-21-06-021		
0405-12	SEE S832-3C		
0405-20	SEE M45938-1-16		
0405-25	SEE M45938-1-3		
0405-26	SEE S632-0C		
0405-5	SEE M45938-1-5		
0405-6	SEE S440-3C		
0407-278		7 12	40
		8 12	
0407-360		7 11	8
		8 11	
0407-66		11 33	4
0424-12	SEE MS35649-264		

PART NUMBER	AIRLINE PART NO.	FIG. ITEM	TTL REQ
0424-16	SEE MS35649-204		
0424-4	SEE MS35649-224		
0424-8	SEE MS35649-244		
0542-3		2 78	2
0635-12	SEE MS25237-387		
0674-325	SEE MS20470AD5-5		
0743-5	SEE MS9461-07		
0770-3	SEE MS15795-802		
0770-5	SEE MS15795-803		
0770-7	SEE MS15795-805		
0770-8	SEE MS15795-807		
0770-9	SEE MS15795-808		
0800-117	SEE MS16535-22		
0819-25	SEE MS16995-25		
0919-12	SEE MS51957-12		
0919-123	SEE MS51957-123		
0919-126	SEE MS51957-126		
0919-13	SEE MS51957-13		
0919-14	SEE MS51957-14		
0919-15	SEE MS51957-15		
0919-16	SEE MS51957-16		
0919-17	SEE MS51957-17		
0919-19	SEE MS51957-19		
0919-27	SEE MS51957-27		
0919-30	SEE MS51957-30		
0919-31	SEE MS51957-31		
0919-44	SEE MS51957-44		
0919-45	SEE MS51957-45		
0919-5	SEE MS51957-5		
0919-62	SEE MS51958-62		
0919-63	SEE MS51958-63		
0919-7	SEE MS51957-7		
092-3	SEE MS35431-3		
092-5	SEE MS35431-5		
092-9	SEE 29-250		
1N4467		14 32	1
1N4469		14 33	1
1N4475		14 34	1
1N5550		12 9	17
1N5618		14 31 12 11 14 30	10
1N823		23 42 26 48 27 48	2

PART NUMBER		AIRLINE PART NO.	FIG.	ITEM	TTL REQ
1N941B					
100243-1			14	37	1
100243-2			7	6	1
1006-5			8	6	1
			6	2A	65
			23	18	
			26	18	
			27	18	
10325DAP			4	41	25
			21	4	
10462-1DAP			14	104	72
			26	118	
			27	120	
10463-1DAP			14	103	82
			21	5	
			22	37	
			23	5	
			25	35	
			26	117	
			27	119	
137D566X9075T2			14	8	1
1521M2B			3	17	2
1605-00			11	38	10
1752806-10	SEE 011-1015-000319				
1779231-113	SEE MS28775-113				
1900307			21	1A	1
1900308-901			2	12	1
			21-	1	RF
1900311			20	1A	1
1900312-901			2	84	1
			20-	1	RF
2N2102			14	20	1
2N2222A			25	7	8
			26	44	
			27	44	
2N2907A			4	12	26
			14	23	
			22	9	
			25	6	
			26	42	
			27	42	
2N3439			14	27	4
2N3739			12	14	1
2N3762			21	16	9
2N4858			22	10	1

NUMERICAL INDEX

PART NUMBER	AIRLINE PART NO.	FIG. ITEM	TTL REQ
2N6274		12 13	1
2N6298		12 40	1
2N6300		12 16	1
2N6315		12 15	1
2N6316		12 35	1
204-0016-000		3 40D	1
241123-24VDC		1 6	1
2500P2A22-61		3 40I	169
		13 9B	
2500S2A22		3 40C	86
		11 6B	
2500077-4	SEE CS0S440-6		
2500157	SEE FHN20G		
2500169-229	SEE NA4-20PMD		
2500169-230	SEE NA4-20-50PMD		
2500169-296	SEE NA4-100PMD		
2500169-313	SEE NA4-150PMD		
2500169-325	SEE NA4-200PMD		
2500169-333	SEE NA4-243PMD		
2500169-335	SEE NA4-255PMD		
2500169-340	SEE NA4-287PMD		
2500169-341	SEE NA4-294PMD		
2500169-342	SEE NA4-301PMD		
2500169-363	SEE NA4-499PMD		
2500169-367	SEE NA4-549PMD		
2500169-380	SEE NA4-750PMD		
2500169-386	SEE NA4-866PMD		
2500169-388	SEE NA4-909PMD		
2500169-392	SEE NA4-1000PMD		
2500169-403	SEE NA4-1300PMD		
2500169-409	SEE NA4-1500PMD		
2500169-417	SEE NA4-1820PMD		
2500169-421	SEE NA4-2000PMD		
2500169-425	SEE NA4-2210PMD		
2500169-426	SEE NA4-2260PMD		
2500169-429	SEE NA4-2430PMD		
2500169-432	SEE NA4-2610PMD		
2500169-433	SEE NA4-2670PMD		
2500169-435	SEE NA4-2800PMD		
2500169-438	SEE NA4-3010PMD		
2500169-439	SEE NA4-3090PMD		
2500169-445	SEE NA4-3570PMD		
2500169-449	SEE NA4-3920PMD		
2500169-455	SEE NA4-4530PMD		

PART NUMBER		AIRLINE PART NO.	FIG. ITEM	TTL REQ
2500169-458	SEE NA4-4870PMD			
2500169-459	SEE NA4-4990PMD			
2500169-460	SEE NA4-5110PMD			
2500169-464	SEE NA4-5620PMD			
2500169-471	SEE NA4-6650PMD			
2500169-474	SEE NA4-7150PMD			
2500169-478	SEE NA4-7870PMD			
2500169-484	SEE NA4-9090PMD			
2500169-488	SEE NA4-10000PMD			
2500169-490	SEE NA4-10500PMD			
2500169-492	SEE NA4-11000PMD			
2500169-493	SEE NA4-11300PMD			
2500169-495	SEE NA4-11800PMD			
2500169-499	SEE NA4-13000PMD			
2500169-511	SEE NA4-17400PMD			
2500169-513	SEE NA4-18200PMD			
2500169-517	SEE NA4-20000PMD			
2500169-519	SEE NA4-21000PMD			
2500169-523	SEE NA4-23200PMD			
2500169-524	SEE NA4-23700PMD			
2500169-525	SEE NA4-24300PMD			
2500169-527	SEE NA4-25500PMD			
2500169-528	SEE NA4-26100PMD			
2500169-530	SEE NA4-27400PMD			
2500169-534	SEE NA4-30100PMD			
2500169-538	SEE NA4-33200PMD			
2500169-542	SEE NA4-36500PMD			
2500169-544	SEE NA4-38300PMD			
2500169-546	SEE NA4-40200PMD			
2500169-553	SEE NA4-47500PMD			
2500169-554	SEE NA4-48700PMD			
2500169-555	SEE NA4-49900PMD			
2500169-563	SEE NA4-60400PMD			
2500169-567	SEE NA4-66500PMD			
2500169-568	SEE NA4-68100PMD			
2500169-582	SEE NA4-95300PMD			
2500169-584	SEE NA4-0-100PMD			
2500169-592	SEE NA4-0-121PMD			
2500169-600	SEE NA4-0-147PMD			
2500169-601	SEE NA4-0-150PMD			
2500169-605	SEE NA4-0-165PMD			
2500169-607	SEE NA4-0-174PMD			
2500169-613	SEE NA4-0-200PMD			
2500169-617	SEE NA4-0-221PMD			

PART NUMBER	AIRLINE PART NO.	FIG. ITEM	TTL REQ
2500169-624	SEE NA4-0-261PMD		
2500169-634	SEE NA4-0-332PMD		
2500169-635	SEE NA4-0-340PMD		
2500169-642	SEE NA4-0-402PMD		
2500169-643	SEE NA4-0-412PMD		
2500169-646	SEE NA4-0-442PMD		
2500169-650	SEE NA4-0-487PMD		
2500169-651	SEE NA4-0-499PMD		
2500180-1	SEE 10325DAP		
2500185	SEE 10462-1DAP		
2500185-1	SEE 10463-1DAP		
2500264-22	SEE RS1741		
2500264-24		14 21	2
2500311-14	SEE MMM14SGDS		
2500311-75	SEE MMM75SGDS		
2500320-14	SEE MMM14PGDSK		
2500320-26	SEE MMM26PGDSK		
2500320-75	SEE MMM75PGDSK		
2500322-1	SEE 2500P2A22-61		
2500323-1	SEE 2500S2A22		
2500327-3	SEE CFHC440-5		
2500394-12	SEE 9723SS0440-7		
2500394-8	SEE 9728SS0440-7		
2500397-1	SEE S203WHITE		
2500397-2	SEE S203BLACK		
2500415-32	SEE 43-03-2		
2500415-662	SEE 43-66-2		
2500426-2	SEE MU270		
2500482-1	SEE GE10-1		
2500652-31	SEE SP7-334-9-5		
2500652-33	SEE SP7-474-9-5		
2500745-1	SEE W101P6		
2500835-21		22 8	2
2500929-3	SEE MS21042L06		
2500929-5	SEE MS21042L3		
2500930-49	SEE RCR32G102JR		
2500930-57	SEE RCR32G222JR		
2500930-68	SEE RCR32G622JR		
2500930-81	SEE RCR32G223JR		
2500930-82	SEE RCR32G243JR		
2500930-96	SEE RCR32G913JR		
2500931-101	SEE RCR20G154JR		
2500931-25	SEE RCR20G101JR		
2500931-41	SEE RCR20G471JR		

PART NUMBER	AIRLINE PART NO.	FIG.	ITEM	TTL REQ
2500931-42	SEE RCR20G511JR			
2500931-44	SEE RCR20G621JR			
2500931-46	SEE RCR20G751JR			
2500931-68	SEE RCR20G622JR			
2500932-103	SEE RCR07G184JR			
2500932-105	SEE RCR07G224JR			
2500932-121	SEE RCR07G105JR			
2500932-18	SEE RCR07G510JR			
2500932-25	SEE RCR07G101JR			
2500932-27	SEE RCR07G121JR			
2500932-29	SEE RCR07G151JR			
2500932-33	SEE RCR07G221JR			
2500932-34	SEE RCR07G241JR			
2500932-37	SEE RCR07G331JR			
2500932-39	SEE RCR07G391JR			
2500932-44	SEE RCR07G621JR			
2500932-46	SEE RCR07G751JR			
2500932-47	SEE RCR07G821JR			
2500932-49	SEE RCR07G102JR			
2500932-51	SEE RCR07G122JR			
2500932-52	SEE RCR07G132JR			
2500932-53	SEE RCR07G152JR			
2500932-55	SEE RCR07G182JR			
2500932-56	SEE RCR07G202JR			
2500932-57	SEE RCR07G222JR			
2500932-65	SEE RCR07G472JR			
2500932-68	SEE RCR07G622JR			
2500932-73	SEE RCR07G103JR			
2500932-76	SEE RCR07G133JR			
2500932-80	SEE RCR07G203JR			
2500932-81	SEE RCR07G223JR			
2500932-85	SEE RCR07G333JR			
2500932-9	SEE RCR07G220JR			
2500970-1		9	6	1
2500970-95		9	4	1
2501212-32	SEE M39018-01-0731			
2501279-20		10	20	4
2501279-55		10	18	4
2501300-25	SEE RW81U1R00F			
2501300-28	SEE RW81U1R30F			
2501300-3	SEE RW81UR120F			
2501300-40	SEE RWRW81U4R30F			
2501300-56	SEE RW81U20R0F			
2501315-37	SEE SP7-105-1-5			

PART NUMBER	AIRLINE PART NO.	FIG. ITEM	TTL REQ
2501315-41	SEE SP7-205-1-5		
2501375-341		14 18 26 29 27 30	31
2501402-409	SEE SD20218		
2501470-21	SEE RLR20C68R0GR		
2501470-51	SEE RLR20C1201GR		
2501477-323	SEE SL20369		
2501502-141	SEE JAN2N4860		
2501502-160	SEE JAN2N4858		
2501502-601	SEE 2N4858		
2501629-13	SEE CK12BX101K		
2501629-17	SEE CK12BX221K		
2501629-25	SEE CK12BX102K		
2501629-29	SEE CK12BX222K		
2501629-31	SEE CK12BX332K		
2501629-37	SEE CK12BX103K		
2501629-41	SEE CK13BX103K		
2501629-53	SEE CK14BX223K		
2501629-61	SEE CK14BR104K		
2501629-65	SEE CK14BR224K		
2501629-69	SEE CK15BR154K		
2501629-74	SEE CK15BR474K		
2501629-76	SEE CK16BR474K		
2501675-445	SEE SN13717		
2503169-50	SEE 137D566X9075T2		
2503220-1	SEE M39003-01-2356		
2503221-17	SEE CL67BE150MPG		
2503221-18	SEE CL67BE330MPG		
2503221-23	SEE CL67BG100MPG		
2503221-24	SEE CL67BG220MPG		
2503221-32	SEE CL67BH151MPG		
2503221-33	SEE CL67BJ050MPG		
2503517-101	SEE JAN1N4148-1		
2503517-3		4 10	32
2503521-1	SEE 014-1001-000319		
2503521-8	SEE 014-1004-000319		
2503594-4	SEE NO4NYLFLWSHR		
2503632	SEE SE26XF01		
2503668-1	SEE NAS1745-2		
2503668-2	SEE NAS1745-3		
2503676-225	SEE 1N4467		
2503676-227	SEE 1N4469		
2503676-233	SEE 1N4475		

PART NUMBER	AIRLINE PART NO.	FIG. ITEM	TTL REQ
2503687-203	SEE E2641-2		
2503687-207	SEE E2645-2		
2503687-208	SEE E2646-2		
2503687-213	SEE E2651-2		
2503687-505	SEE JANTX1N750A		
2503692-5	SEE SR7P2		
2503771-116	SEE M7-298-116		
2503771-136	SEE M7-298-136		
2503771-48	SEE M7-298-48		
2503771-99	SEE M7-298-99		
2503799-202	SEE 1N823		
2503799-214	SEE 1N9418		
2503988-205		4 11	3
2504035-253	SEE 0Z740609G		
2504076-2	SEE 2N2102		
2504155-3	SEE 512		
2504155-7	SEE 516		
2504188-130	SEE MS24693C4		
2504188-274	SEE MS24693C48		
2504188-328	SEE MS246930-72		
2504188-355		11 31	2
2504188-358	SEE MS24693C272		
2504203-273		3 18	5
2504203-34		2 72	4
2504225-147	SEE TNS106X020KI		
2504225-95	SEE TNS105X075KI		
2504280-504	SEE JANTX2N3421		
2504345-212	SEE FHS632-12		
2504345-26	SEE FHS632-6		
2504345-58	SEE FHS032-8		
2504359-6	SEE NAS671C4		
2504364-18	SEE RL07S510G		
2504364-33	SEE RL07S221G		
2504364-42	SEE RL07S511G		
2504364-49	SEE RL07S102G		
2504364-56	SEE RL07S202G		
2504364-57	SEE RL07S222G		
2504364-73	SEE RL07S103G		
2504364-74	SEE RL07S113G		
2504364-80	SEE RL07S203G		
2504364-82	SEE RL07S243G		
2504364-97	SEE RL07S104G		
2504638-10	SEE NAS620C6		
2504638-13	SEE NAS620C10L		

PART NUMBER	AIRLINE PART NO.	FIG.	ITEM	TTL REQ
2504638-15	SEE NAS620C416L			
2504638-2	SEE NAS620C2			
2504638-5	SEE NAS620C4L			
2504638-6	SEE NAS620C4			
2504638-9	SEE NAS620C6L			
2504649-2	SEE 2N2907A			
2504651-10	SEE JAN2N718A			
2504651-20	SEE S18429			
2504709-46	SEE MS75089-20			
2504709-49	SEE MS75089-23			
2504814-5	SEE 1006-5			
2504909-201	SEE UZ6110			
2504931-8	SEE BSOS440-30			
2504990	SEE 5266C			
2554039-1		16	2C	1
2578829-13	SEE 2678-17063N140			
2579174-34	SEE 5-8-4-128			
2586239-209	SEE DZ40506J			
2586239-212	SEE DZ40506M			
2586239-216	SEE DZ40506R			
2678-17063N140		11	13	16
		12	33	
27502ADM		19	16	12
		25	26	
28S96		3	6	2
29-250		13	9D	1
300-1872		3	15	1
300-1873		3	12	8
300-1875		3	3	5
31161		7	22	2
		8	22	
314A102		25	29	1
314A222		4	37	4
31518		3	40M	3
316A103		23	29	2
316A222		4	38	3
316A332		25	32	1
316A472		23	28	1
316A682		25	33	1
324598		3	40N	14
324607		1	14	28
		7	16	
		8	16	
332773		11	39	AR

PART NUMBER	AIRLINE PART NO.	FIG. ITEM	TTL REQ
336253-46	SEE M24066-2-146		
337457-67	SEE RW67V560		
337708-20	SEE RW69VR62		
337708-61	SEE RW69V330		
337708-84	SEE RW69V301		
35-1B3-10-1		10 16	10
35-1B3-11-1		10 17	16
351-21-05-021		7 7	2
		8 7	
351-21-06-021		2 46	1
4001750-116	SEE M39014/05-2116		
4001750-23	SEE M39014-05-2043		
4002240-202	SEE 2N2222A		
4002246-101	SEE JAN2N2946A		
4002646-442		18 13	2
4002668-486		25 16	1
4002669-475		4 25	36
		6 14	
		17 19	
		18 9	
		19 15	
		22 33	
		24 31	
		25 24	
4003102-228		21 20	4
4003165-400	SEE SN23805J		
4003165-402	SEE SN23806J		
4003165-403	SEE SN23807J		
4003165-404	SEE SN23808J		
4003165-405	SEE SN24336J		
4003165-410	SEE SN23809J		
4003165-420	SEE SN23810J		
4003485-474		4 32	14
		17 14	
		19 10	
		25 22	
4003486-407		25 30	1
4003509-915		22 45	2
4003515-451		4 34	4
4003661-454	SEE SN87462J		
4004295-95		25 1C	1
4004551	SEE 000403-0100		
4004860-451	SEE SN89820J		
4005526-31	SEE 735-0009-000		

NUMERICAL INDEX

PART NUMBER	AIRLINE PART NO.	FIG.	ITEM	TTL REQ
4005526-32	SEE 735-0010-000			
4005545-450	SEE SN24244J			
4005805-137	SEE RWR84S2R61FR			
4005805-139	SEE RWR84S2R74FR			
4005882-3		9	2D	64
4005882-3	SEE 4005882-3			
4006195-421	SEE SN24772			
4006200-14	SEE M39014-01-1313			
4006200-17	SEE M39014-01-1317			
4006200-25	SEE M39014-02-1292			
4006200-29	SEE M39014-02-1298			
4006200-5	SEE M39014-01-1299			
4006200-53	SEE M39014-02-1302			
4006200-61	SEE M39014-02-1310			
4006200-73	SEE M39014-01-1553			
4006200-85	SEE M39014-02-1415			
4006205-17	SEE M39006-09-8260			
4006205-24	SEE M39006-09-8283			
4006559-34	SEE RCR05G241JS			
4006559-49	SEE RCR05G102JS			
4006559-50	SEE RCR05G112JS			
4006559-57	SEE RCR05G222JS			
4006559-60	SEE RCR05G302JS			
4006559-68	SEE RCR05G622JS			
4006559-73	SEE RCR05G103JS			
4006559-84	SEE RCR05G303JS			
4006785-30	SEE M39016-9-024L			
4006785-52	SEE M39016-9-052L			
4006809-21	SEE 2N3762			
4006809-55	SEE SS5709H			
4007039-17	SEE SS-010-17			
4007039-34	SEE SS-010-34			
4007152-402	SEE SN34251J			
4007955-3	SEE 510527-11			
4008219-20		14	26	1
4008387		18	3	8
		19	3	
		20	2	
		21	2	
		22	36	
		23	2	
		24	3	
4008784-61	SEE 4840			
4008784-66	SEE 4810			

NUMERICAL INDEX

PART NUMBER	AIRLINE PART NO.	FIG. ITEM	TTL REQ
4009281-311	SEE LM111H		
4009286-201	SEE 1N5550		
4009638-6		26 6 27 6	4
4010430-325	SEE SL20447		
4011305-400	SEE CL630F		
4011305-404	SEE CL631F		
4011305-410	SEE CL632F		
4011305-420	SEE CL634F		
4011573-404	SEE SN54H04J		
4011573-422	SEE SN54H22J		
4011575-427	SEE SN5427J		
4011701-455	SEE SN54155J		
4012411		15 18	1
4012597-21	SEE 2N6315		
4012597-22	SEE 2N6316		
4012658-483	SEE SN5483AJ00		
4012724	SEE HACP24X0-030		
4012731	SEE S402-61F		
4012731-2	SEE S602-61F		
4012993-242		26 25 27 26	2
4013151-901		2 76	1
4013151-902		2 77	1
4013152-1	SEE B405-170		
4013152-2	SEE B605-4		
4014146-1	SEE 300-1872		
4014146-2	SEE 300-1873		
4014146-3	SEE 300-1875		
4014147	SEE 513-0406-001		
4014147-1	SEE 513-0606-001		
4014147-2	SEE 513-1406-001		
4014150	SEE PFC2-832-72		
4014168-909		14 102 22 15 26 115 27 117	25
4014221	SEE 35-183-11-1		
4014221-20		10 19	16
4014221-50	SEE 35-183-10-1		
4014785-10	SEE 314A102		
4014785-13	SEE 314A222		
4014787-13	SEE 316A222		
4014787-14	SEE 316A332		
4014787-15	SEE 316A472		

NUMERICAL INDEX

PART NUMBER	AIRLINE PART NO.	FIG. ITEM	TTL REQ
4014787-18	SEE 316A682		
4014787-19	SEE 316A103		
4014946-6	SEE B5691-6		
4015724-1		2 38	2
4015724-100		2 39	2
		11 37	
4015749-313	SEE 4213SM		
4016987-438	SEE SD70578		
4017416-480		6 16	18
4017465-450	SEE SN48680J		
4017572-20	SEE 2N3439		
4017936-457		24 26	6
		25 27	
4017938-485		25 15	1
4018679-2	SEE 026-4005-000342		
4018847-1	SEE 030-2064-010		
4018848	SEE 204-0016-000		
4019564-8	SEE MS17172-8		
4021504-2	SEE 2N3739		
4021530-901		2 9	1
		17- 1	RF
4021531		17 2	1
4021532-901		2 10	1
		18- 1	RF
4021533		18 2	1
4021534-901		2 11	2
		19- 1	RF
4021535		19 2	2
4021562-462	SEE SN54H62J		
4021563-460	SEE 27502ADM		
4021678-5	SEE CTS206-005		
4021678-8	SEE CTS206-008		
4022010	SEE CS753		
4022135-901		5 2	2
		6- 1	RF
4022136		6 2	2
4022353-323	SEE LH0023CG		
4022508	SEE B5805		
4022510-753	SEE SP753		
4022512	SEE 1521M2B		
4022513-1	SEE B400-3TMTKN		
4022514-2	SEE B400-1-4KN		
4022515-2	SEE B600KN8-2		
4022517	SEE B4FT1-7		

PART NUMBER	AIRLINE PART NO.	FIG. ITEM	TTL REQ
4022521-54	SEE M55302-55A54M		
4022521-56	SEE M55302-55A56M		
4022521-70	SEE M55302-55A70M		
4022522-54		4 2	1
4022522-56		4 3	1
4022522-70		14 2	1
4022523	SEE P5001-8LM11-2		
4022524	SEE R00-01LP0		
4022526-3	SEE 8S766		
4022527-1	SEE SS400-61-4AN		
4022527-3	SEE SS600-61-6ANKN		
4022527-5	SEE SS600-61-4ANKN		
4022527-6	SEE SS402-61		
4022527-7	SEE SS602-61		
4022529-36	SEE M55302-61A36		
4022529-40	SEE M55302-61A40		
4022529-44	SEE M55302-61A44		
4022530-36	SEE M5302A36M		
4022530-40	SEE M55302-62A40M		
4022530-44	SEE M55302-62A44M		
4022531-1	SEE B400-2-2KN		
4022531-2	SEE B600-2-2KN		
4022531-3	SEE B400-2-4KM		
4022531-4	SEE B600-2-4KM		
4022593-150	SEE HU8470-1-500AL		
4022594-901		2 13	1
		22- 1	RF
4022595		22 2	1
4022628-432	SEE SN54132J00		
4022629	SEE 700685		
4022828		10 5	1
4022829		10 4	1
4022830		10 3	1
4022831		10 2	1
4022832		10 1A	1
4022894-200	SEE 2N6274		
4022949-902		2 1A	1
4022950		15 5	2
4023083-901		2 15	1
		24- 1	RF
4023084		24 2	1
4023089		2 40	1
4023091	SEE 970-3575-0		
4023093-403	SEE SN54H103J00		

PART NUMBER	AIRLINE PART NO.	FIG. ITEM	TTL REQ
4023094-493	SEE SN54293J00		
4023096-474	SEE SN54H74J		
4023097-423	SEE SN54123J00		
4023098-493	SEE SN54393J		
4023099-1		2 41	1
4023701-405	SEE SN54H05J		
4023702-427	SEE SN5427J		
4023751-497	SEE SN54197J		
4024019-404	SEE DM54L04J		
4024222-20	SEE MJ5416		
4024896	SEE 8S760		
4024935-902		5- 3	1
4024991-341		26 35	6
		27 35	
4025243-433	SEE SN5433J		
4025324-1		2 25	2
4025750-201	SEE T4115D		
4025887-203	SEE 1N5618		
4025998	SEE 65-175		
4026054-497	SEE SN74S197N		
4026194-901		3 29	1
		5- 1	RF
4026197-907		2 19	1
4026197-908		2 19A	1
4026197-909		2 20	1
4026197-910		2 20A	1
4026264		2 42	1
4026864-401	SEE SNJ54LS00J		
4026864-403	SEE SNJ54LS04J		
4026864-405	SEE SNJ54LS10J		
4026872-403	SEE SNJ54LS157J		
4026910-17	SEE CL67BE150MPG		
4026910-22	SEE CL67BE271MPG		
4026910-24	SEE CL67BG220MPG		
4026910-26	SEE CL67BG181MPG		
4026910-34	SEE CL67BJ100MPG		
4026910-50	SEE CL67BL560MPG		
4026910-54	SEE CL67BN220MPG		
4026911-2	SEE W650B1A106F		
4027467-901		1- 2A	2
		2 15F	RF
		25- 1D	
4027468		25 1E	1
4028423-1		2 43	3

PART NUMBER	AIRLINE PART NO.	FIG. ITEM	TTL REQ
4028423-2		2 44	3
4028446-901		1- 2	1
		2 15E	RF
		25- 1	RF
4029639-251 SEE UTG1533			
4030058-201		26 49	8
		27 49	
4030876-901		3 28	1
		4- 1	RF
4030877		4 1A	1
4030898-601 SEE M38510-303018CX			
4030898-602 SEE M38510-303028CX			
4030899-601 SEE M38510-300018CX			
4030899-603 SEE M38510-300038CX			
4030899-605 SEE M38510-300058CX			
4030899-607 SEE M38510-300078CX			
4030913-1 SEE H314			
4030913-3 SEE H654			
4030914 SEE H321-1			
4030915-1 SEE TVA1578			
4030927		11 3	1
		13- 1	RF
4030943 SEE 026982			
4031325-602 SEE M38510-305028CX			
4031662-602 SEE M38510-301028CX			
4031669		11 22	1
4031670		11 23	1
4031671		11 24	1
4031672		11 14	1
4031673		13 1A	1
4031699 SEE 28S96			
4032047		13- 9	1
4032194-901		3- 37	1
4032194-903		3- 38	1
4032227		16 1A	1
4032228		15 2	1
		16- 1	RF
4032234		16 2	1
4032235		2 28	2
4032324 SEE 51-320-025			
4032609-603 SEE M38510-307038EX			
4032615-601 SEE M38510-314018EX			
4032616-603 SEE M38510-309038EX			
4032646-471 SEE SM1136			

PART NUMBER	AIRLINE PART NO.	FIG. ITEM	TTL REQ
4032785-421	SEE SH76296		
4034452-1	SEE 100243-1		
4034452-2	SEE 100243-2		
4034708-14	SEE IM7114L2CJN		
4038288		25- 1A	1
4038433		25 1B	1
4038504		2 83	4
4038555-473	SEE SNJ54LS373J		
4038692-423	SEE SNJ54LS123J		
4040876-10	SEE M39016-13-082L		
4045271-255	SEE ER2055S		
4045320-473	SEE SNJ54LS273J		
4045321-444	SEE SNJ54LS244J		
4046859-201		7 1A	2
		8 1A	
4046859-201	SEE 4046859-201		
4046859-301		7 2	2
		8 2	
4046859-301	SEE 4046859-301		
4046859-801		7 3	4
		8 3	
4046859-801	SEE 4046859-801		
4046860-200	SEE 2N6298		
4046860-298	SEE 2N6300		
4046861	SEE DL1-156RW4		
4046862	SEE DL1-156P		
4046866-12	SEE 82ME		
4046867-24	SEE 57-20240-2		
4046868-12	SEE 81C1-8		
4046869-12		7 9	2
		8 9	
4046869-12	SEE 4046869-12		
4046871	SEE 241123-24VDC		
4047505-100		1 4	1
		2- 1	RF
4047505-200		1 3	1
4047505-211		1- 1	RF
4047505-212		1- 1	RF
4047505-213		1- 1	RF
4047505-214		1- 1	RF
4047505-221		1- 1	RF
4047505-222		1- 1	RF
4047505-223		1- 1	RF
4047505-224		1- 1	RF

NUMERICAL INDEX

PART NUMBER	AIRLINE PART NO.	FIG. ITEM	TTL REQ
4047505-400		1 3A	1
4047505-411		1- 1	RF
4047505-412		1- 1	RF
4047505-413		1- 1	RF
4047505-414		1- 1	RF
4047505-421		1- 1	RF
4047505-422		1- 1	RF
4047505-423		1- 1	RF
4047505-424		1- 1	RF
4047693-901		3- 1	RF
4047694		2 3	1
		2 4	1
4047695		15- 1	RF
		2 5	1
4047697		9- 1	RF
		2 7	1
4047698		7- 1	RF
		2 8	1
4047699-901		8- 1	RF
		2 14	1
4047700		23- 1	RF
4047701-901		23 1A	1
		11 4	1
4047702		14- 1	RF
4047705-901		14 1A	1
		2 16	1
4047706		26- 1	RF
4047707-901		26 1A	1
		2 17	1
4047708		27- 1	RF
4047711		27 1A	1
		9 1A	1
4047864		10- 1	RF
4047865		7 4	1
4047866		8 4	1
4047867		2 6	1
		7 5	2
4047868		8 5	
4047869		2 21	2
4047870		10 8	1
4047871		9 2	1
4047872		3 1A	1
4048047	SEE HDJA	15 1A	1

NUMERICAL INDEX

PART NUMBER	AIRLINE PART NO.	FIG. ITEM	TTL REQ
4048083		10 10	1
4048084		10 11	1
4048085		10 6	1
4048086		11 5	1
4048087-901		2 2	1
		11- 1	RF
4048088		11 1A	1
4048089		12- 1	RF
4048089-901		11 2	1
4048090		12 1A	1
4048091		10 9	1
4048092		10 7	1
4048093		2 18	2
4048094		2 73	1
4048985-901		3- 40	1
4048986-901		11- 6	1
4050400-101		21 30	1
4050400-102		21 31	1
4050400-103		21 32	1
4050400-104		21 33	1
4050400-105		21 34	1
4050400-106		21 35	1
4050400-107		21 36	1
4050400-108		21 37	1
4050400-109		21 38	1
4050400-110		21 39	1
4050400-111		21 40	1
4050400-112		21 41	1
4050400-113		21 42	1
4050400-114		21 43	1
4213SM		26 33	4
		27 33	
43-03-2		12 34	1
43-66-2		12 31	5
43D202G050KD1		12 7	2
4810		12 22	
4840		13 7	1
5-8-4-128		2 26	2
51-320-025		16 4	2
510527-11		9 2C	26
512		24 35	5
513-0406-001		3 2	8
513-0606-001		3 11	5
513-1406-001		3 14	1

NUMERICAL INDEX

PART NUMBER	AIRLINE PART NO.	FIG. ITEM	TTL REQ
516		14 105	78
		20 31	
		23 4	
		26 119	
		27 121	
5266C		2 45	1
57-20240-2		9 5	1
632367-10	SEE F02B250V11-2AS		
632367-11	SEE F02B250V2AS		
632367-12	SEE F02B125V3AS		
632523-23	SEE 31161		
632523-33	SEE 324598		
632523-34	SEE 324607		
632523-56	SEE 31518		
65-175		15 3	1
700685		22 34	1
724057-7	SEE TVA1318-5		
724057-8	SEE TVA1319-9		
724057-9	SEE 43D202G050KD1		
735-0009-000		9 2A	781
735-0010-000		9 2B	193
8S760		3 16	1
8S766		3 7	1
81C1-8		1 5	1
824636-2	SEE 1605-00		
872053-11	SEE 013-1002-000319		
890744-3	SEE G51HCBLACK		
970-3575-0		24 17	1
9723SS0440-7		11 16	4
9728SS0440-7		11 15	4

EQUIPMENT DESIGNATOR INDEX

EQUIPMENT DESIGNATOR	FIG.	ITEM	PART NUMBER
A1	2	9	4021530-901
A1C1 AND 3	17	5	CK14BR104K
A1C2 AND 4	17	6	CL67BE330MPG
A1C5 THRU7	17	5	CK14BR104K
A1P1	17	3	000403-0100
A1R1	17	7	NA4-301PMD
A1R2 THRU6	17	8	RL07S102G
A1R8THRU10	17	8	RL07S102G
A1U1 AND28	17	9	SN23806J
A1U12	17	15	SN23810J
A1U13AND15	17	12	SN23805J
A1U16AND19	17	11	SN23809J
A1U17AND18	17	12	SN23805J
A1U2 AND14	17	10	CL630F
A1U21AND23	17	11	SN23809J
A1U22AND29	17	16	SN24244J
A1U24AND26	17	11	SN23809J
A1U25AND38	17	12	SN23805J
A1U27AND33	17	14	4003485-474
A1U3 AND 6	17	11	SN23809J
A1U30	17	17	CL631F
A1U31AND35	17	16	SN24244J
A1U32	17	9	SN23806J
A1U34AND37	17	13	SN23808J
A1U36	17	16	SN24244J
A1U39	17	18	CL634F
A1U4 AND10	17	12	SN23805J
A1U40	17	12	SN23805J
A1U41	17	19	4002669-475
A1U5 AND 8	17	14	4003485-474
A1U7 AND20	17	13	SN23808J
A1U9 AND11	17	11	SN23809J
A1O	2	15E	4028446-901
A1O	2	15F	4027467-901
A1OC1 AND2	25	2	CK14BR104K
A1OC3	25	3	CK13BX103K
A1OC4	25	4	CK12BX101K
A1OC5THRU8	25	2	CK14BR104K
A1OC9	25	5	CL67BG100MPG
A1OP1	25	36	000403-0100
A1OQ1	25	6	2N2907A
A1OQ2 AND3	25	7	2N2222A
A1OR1THRU5	25	8	RCR07G102JR
A1OR11	25	8	RCR07G102JR
A1OR12	25	11	RCR07G222JR
A1OR13	25	12	RCR07G391JR
A1OR14	25	8	RCR07G102JR
A1OR15	25	12	RCR07G391JR
A1OR16	25	8	RCR07G102JR
A1OR6	25	9	RCR07G202JR
A1OR7 AND8	25	10	RCR07G472JR
A1OR9AND10	25	11	RCR07G222JR
A1OS1-S5	25	14	CTS206-005
A1OU1	25	15	4017938-485
A1OU10	25	21	SN23809J
A1OU11	25	22	4003485-474
A1OU13	25	21	SN23809J
A1OU14	25	20	SN23806J
A1OU15	25	23	SN24772
A1OU16	25	22	4003485-474
A1OU17	25	23	SN24772
A1OU18	25	17	SN23805J
A1OU19	25	21	SN23809J
A1OU2	25	16	4002668-486
A1OU20	25	24	4002669-475
A1OU21	25	20	SN23806J
A1OU22	25	17	SN23805J
A1OU24	25	24	4002669-475
A1OU25	25	24	4002669-475
A1OU26	25	25	SD20218
A1OU27	25	19	SN23808J
A1OU28	25	26	27502ADM
A1OU29	25	27	4017936-457
A1OU3AND12	25	17	SN23805J
A1OU30	25	29	314A102
A1OU31	25	27	4017936-457
A1OU32	25	26	27502ADM
A1OU33	25	26	27502ADM
A1OU34	25	30	4003486-407
A1OU35	25	20	SN23806J
A1OU37	25	26	27502ADM
A1OU38	25	19	SN23808J
A1OU39	25	19	SN23808J
A1OU4 AND8	25	18	SN5427J
A1OU40	25	19	SN23808J
A1OU41	25	19	SN23808J
A1OU42	25	17	SN23805J

EQUIPMENT DESIGNATOR INDEX

EQUIPMENT DESIGNATOR	FIG.	ITEM	PART NUMBER
A10U43	25	19	SN23808J
A10U44	25	31	SD70578
A10U45	25	32	316A332
A10U46	25	31	SD70578
A10U47	25	20	SN23806J
A10U48	25	18	SN5427J
A10U49	25	33	316A682
A10U5AND23	25	19	SN23808J
A10U50	25	22	4003485-474
A10U51	25	34	SN24336J
A10U52	25	21	SN23809J
A10U6 AND7	25	20	SN23806J
A10U9AND36	25	18	SN5427J
A12	2	16	4047705-901
A12CR1AND2	26	46	JAN1N4148-1
A12CR10	26	49	4030058-201
A12CR11	26	49	4030058-201
A12CR12	26	49	4030058-201
A12CR13	26	49	4030058-201
A12CR14	26	46	JAN1N4148-1
A12CR15	26	46	JAN1N4148-1
A12CR16	26	46	JAN1N4148-1
A12CR17	26	46	JAN1N4148-1
A12CR18	26	46	JAN1N4148-1
A12CR19	26	46	JAN1N4148-1
A12CR20	26	46	JAN1N4148-1
A12CR21	26	46	JAN1N4148-1
A12CR22	26	46	JAN1N4148-1
A12CR23	26	46	JAN1N4148-1
A12CR24	26	46	JAN1N4148-1
A12CR25	26	46	JAN1N4148-1
A12CR3AND4	26	46	JAN1N4148-1
A12CR5AND6	26	46	JAN1N4148-1
A12CR7AND8	26	46	JAN1N4148-1
A12CR9	26	46	JAN1N4148-1
A12C1 AND3	26	18	CK14BR104K
A12C11	26	18	CK14BR104K
A12C12	26	18	CK14BR104K
A12C13	26	18	CK14BR104K
A12C14	26	18	CK14BR104K
A12C15	26	18	CK14BR104K
A12C16	26	18	CK14BR104K
A12C17	26	18	CK14BR104K
A12C18	26	18	CK14BR104K
A12C19	26	18	CK14BR104K
A12C2AND21	26	24	M39014-01-1553
A12C20	26	17	CK13BX103K
A12C22	26	21	M7-298-116
A12C23	26	18	CK14BR104K
A12C24	26	18	CK14BR104K
A12C25	26	18	CK14BR104K
A12C26	26	18	CK14BR104K
A12C27	26	18	CK14BR104K
A12C28	26	18	CK14BR104K
A12C29	26	26	CL67BG220MPG
A12C30	26	26	CL67BG220MPG
A12C31	26	18	CK14BR104K
A12C32	26	18	CK14BR104K
A12C33	26	26	CL67BG220MPG
A12C34	26	26	CL67BG220MPG
A12C35	26	26	CL67BG220MPG
A12C36	26	26	CL67BG220MPG
A12C37	26	26	CL67BG220MPG
A12C38	26	24	M39014-01-1553
A12C39	26	24	M39014-01-1553
A12C4	26	10	SP7-334-9-5
A12C40	26	20	CK16BR474K
A12C41	26	11	SP7-474-9-5
A12C42	26	18	CK14BR104K
A12C43	26	25	4012993-242
A12C44	26	12	SP7-105-1-5
A12C45	26	13	SP7-205-1-5
A12C46	26	13	SP7-205-1-5
A12C47	26	19	M39014-02-1415
A12C48	26	19	M39014-02-1415
A12C49	26	18	CK14BR104K
A12C5	26	15	CK12BX102K
A12C50	26	22	TNS105X075KI
A12C51	26	23	TNS106X020KI
A12C52	26	28	W650B1A106F
A12C53	26	24	M39014-01-1553
A12C54	26	11	SP7-474-9-5
A12C55	26	4	CK15BR474K
A12C56	26	4	CK15BR474K
A12C57	26	11	SP7-474-9-5
A12C58	26	18	CK14BR104K
A12C59	26	18	CK14BR104K
A12C6	26	14	CK12BX221K

EQUIPMENT DESIGNATOR INDEX

EQUIPMENT DESIGNATOR	FIG.	ITEM	PART NUMBER
A12C60	26	11	SP7-474-9-5
A12C61	26	16	CK12BX332K
A12C62	26	27	CL67BG181MPG
A12C63	26	27	CL67BG181MPG
A12C64	26	24	M39014-01-1553
A12C65	26	24	M39014-01-1553
A12C66	26	18	CK14BR104K
A12C67	26	24	M39014-01-1553
A12C68	26	24	M39014-01-1553
A12C69	26	24	M39014-01-1553
A12C7 AND8	26	18	CK14BR104K
A12C70	26	18	CK14BR104K
A12C71	26	18	CK14BR104K
A12C72	26	18	CK14BR104K
A12C9AND10	26	18	CK14BR104K
A12K1 AND2	26	50	M39016-9-024L
A12K3	26	51	M39016-9-052L
A12K4	26	52	M39016-13-082L
A12P1	26	2	000403-0100
A12Q1 AND2	26	44	2N2222A
A12Q10	26	44	2N2222A
A12Q11	26	45	JAN2N2946A
A12Q12	26	40	JAN2N4860
A12Q13	26	43	JAN2N718A
A12Q14	26	45	JAN2N2946A
A12Q15	26	40	JAN2N4860
A12Q16	26	45	JAN2N2946A
A12Q17	26	40	JAN2N4860
A12Q18	26	40	JAN2N4860
A12Q3	26	41	JAN2N4858
A12Q4	26	39	MU270
A12Q5THRU7	26	42	2N2907A
A12Q8 AND9	26	40	JAN2N4860
A12R1AND49	26	115	4014168-909
A12R10	26	71	NA4-10000PMD
A12R100	26	77	NA4-5110PMD
A12R101	26	73	NA4-20000PMD
A12R102	26	71	NA4-10000PMD
A12R103	26	73	NA4-20000PMD
A12R104	26	60	NA4-1000PMD
A12R105	26	71	NA4-10000PMD
A12R106	26	71	NA4-10000PMD
A12R107	26	91	NA4-0-200PMD
A12R108	26	91	NA4-0-200PMD
A12R109	26	78	NA4-33200PMD
A12R11	26	71	NA4-10000PMD
A12R110	26	77	NA4-5110PMD
A12R111	26	77	NA4-5110PMD
A12R112	26	83	NA4-49900PMD
A12R113	26	83	NA4-49900PMD
A12R114	26	87	NA4-0-100PMD
A12R115	26	87	NA4-0-100PMD
A12R116	26	98	NA4-0-499PMD
A12R117	26	98	NA4-0-499PMD
A12R118	26	73	NA4-20000PMD
A12R119	26	102	RCR07G101JR
A12R12	26	81	NA4-40200PMD
A12R120	26	73	NA4-20000PMD
A12R121	26	73	NA4-20000PMD
A12R122	26	87	NA4-0-100PMD
A12R123	26	87	NA4-0-100PMD
A12R124	26	58	NA4-750PMD
A12R125	26	59	NA4-909PMD
A12R126	26	85	NA4-68100PMD
A12R127	26	98	NA4-0-499PMD
A12R128	26	57	NA4-549PMD
A12R129	26	67	NA4-4870PMD
A12R13	26	101	RCR07G510JR
A12R130	26	91	NA4-0-200PMD
A12R131	26	61	NA4-2000PMD
A12R132	26	80	NA4-38300PMD
A12R133	26	99	GE10-1
A12R134	26	115	4014168-909
A12R135	26	115	4014168-909
A12R136	26	99	GE10-1
A12R137	26	68	NA4-4990PMD
A12R138	26	86	NA4-95300PMD
A12R139	26	71	NA4-10000PMD
A12R14	26	101	RCR07G510JR
A12R140	26	68	NA4-4990PMD
A12R141	26	86	NA4-95300PMD
A12R142	26	71	NA4-10000PMD
A12R143	26	111	RW81U1R30F
A12R144	26	71	NA4-10000PMD
A12R145	26	110	RW81U1R00F
A12R146	26	112	RWRW81U4R30F
A12R147	26	112	RWRW81U4R30F
A12R148	26	63	NA4-2430PMD

EQUIPMENT DESIGNATOR INDEX

EQUIPMENT DESIGNATOR	FIG.	ITEM	PART NUMBER
A12R149	26	77	NA4-5110PMD
A12R15	26	101	RCR07G510JR
A12R150	26	77	NA4-5110PMD
A12R151	26	83	NA4-49900PMD
A12R152	26	83	NA4-49900PMD
A12R153	26	98	NA4-0-499PMD
A12R154	26	87	NA4-0-100PMD
A12R155	26	73	NA4-20000PMD
A12R156	26	87	NA4-0-100PMD
A12R157	26	98	NA4-0-499PMD
A12R158	26	73	NA4-20000PMD
A12R159	26	73	NA4-20000PMD
A12R16	26	101	RCR07G510JR
A12R160	26	73	NA4-20000PMD
A12R161	26	73	NA4-20000PMD
A12R162	26	71	NA4-10000PMD
A12R163	26	73	NA4-20000PMD
A12R164	26	115	4014168-909
A12R165	26	79	NA4-36500PMD
A12R166	26	115	4014168-909
A12R167	26	115	4014168-909
A12R168	26	98	NA4-0-499PMD
A12R169	26	87	NA4-0-100PMD
A12R17	26	101	RCR07G510JR
A12R170	26	87	NA4-0-100PMD
A12R171	26	55	NA4-200PMD
A12R172	26	86	NA4-95300PMD
A12R173	26	56	NA4-255PMD
A12R174	26	67	NA4-4870PMD
A12R175	26	55	NA4-200PMD
A12R176	26	54	NA4-100PMD
A12R177	26	82	NA4-47500PMD
A12R178	26	66	NA4-4530PMD
A12R179	26	62	NA4-2210PMD
A12R18	26	101	RCR07G510JR
A12R180	26	73	NA4-20000PMD
A12R181	26	71	NA4-10000PMD
A12R182	26	73	NA4-20000PMD
A12R183	26	71	NA4-10000PMD
A12R19	26	101	RCR07G510JR
A12R2	26	61	NA4-2000PMD
A12R20	26	101	RCR07G510JR
A12R21	26	101	RCR07G510JR
A12R22	26	101	RCR07G510JR
A12R23	26	101	RCR07G510JR
A12R25	26	71	NA4-10000PMD
A12R26	26	73	NA4-20000PMD
A12R27	26	73	NA4-20000PMD
A12R28	26	72	NA4-15000PMD
A12R29	26	69	NA4-0-150PMD
A12R3AND24	26	73	NA4-20000PMD
A12R30	26	75	NA4-24300PMD
A12R31	26	84	NA4-66500PMD
A12R32	26	83	NA4-49900PMD
A12R33	26	88	NA4-0-121PMD
A12R34	26	71	NA4-10000PMD
A12R35	26	65	NA4-3920PMD
A12R36	26	71	NA4-10000PMD
A12R38	26	73	NA4-20000PMD
A12R39	26	81	NA4-40200PMD
A12R4AND52	26	68	NA4-4990PMD
A12R40	26	73	NA4-20000PMD
A12R41	26	101	RCR07G510JR
A12R42	26	101	RCR07G510JR
A12R43	26	101	RCR07G510JR
A12R44	26	101	RCR07G510JR
A12R45	26	101	RCR07G510JR
A12R46	26	101	RCR07G510JR
A12R47	26	101	RCR07G510JR
A12R48	26	73	NA4-20000PMD
A12R5 AND8	26	104	RCR07G122JR
A12R50	26	74	NA4-23200PMD
A12R51	26	73	NA4-20000PMD
A12R53	26	94	NA4-0-402PMD
A12R54	26	89	NA4-0-130PMD
A12R55	26	95	NA4-0-412PMD
A12R56	26	97	NA4-0-487PMD
A12R57	26	92	NA4-0-221PMD
A12R58	26	87	NA4-0-100PMD
A12R59	26	96	NA4-0-442PMD
A12R6	26	105	RCR07G152JR
A12R60	26	93	NA4-0-261PMD
A12R61	26	98	NA4-0-499PMD
A12R62	26	98	NA4-0-499PMD
A12R63	26	100	RCR07G220JR
A12R64	26	107	RCR07G622JR
A12R65	26	106	RCR07G472JR
A12R66	26	107	RCR07G622JR

EQUIPMENT DESIGNATOR INDEX

EQUIPMENT DESIGNATOR	FIG.	ITEM	PART NUMBER
A12R67	26	106	RCR07G472JR
A12R68	26	116	NA4-0-332PMD
A12R69	26	78	NA4-33200PMD
A12R7	26	108	RCR07G103JR
A12R70	26	71	NA4-10000PMD
A12R71	26	113	RW81U20R0F
A12R72	26	113	RW81U20R0F
A12R73	26	111	RW81U1R30F
A12R74	26	110	RW81U1R00F
A12R75	26	64	NA4-3090PMD
A12R76	26	114	RLR20C1201GR
A12R77	26	73	NA4-20000PMD
A12R78	26	76	NA4-25500PMD
A12R79	26	90	NA4-0-165PMD
A12R80	26	115	4014168-909
A12R81	26	115	4014168-909
A12R82	26	70	NA4-9090PMD
A12R83	26	71	NA4-10000PMD
A12R84	26	115	4014168-909
A12R85	26	115	4014168-909
A12R86	26	87	NA4-0-100PMD
A12R87	26	87	NA4-0-100PMD
A12R88	26	69	NA4-5620PMD
A12R89	26	69	NA4-5620PMD
A12R9AND37	26	103	RCR07G102JR
A12R90	26	87	NA4-0-100PMD
A12R91	26	87	NA4-0-100PMD
A12R92	26	83	NA4-49900PMD
A12R93	26	83	NA4-49900PMD
A12R94	26	83	NA4-49900PMD
A12R95	26	83	NA4-49900PMD
A12R96	26	77	NA4-5110PMD
A12R97	26	77	NA4-5110PMD
A12R98	26	83	NA4-49900PMD
A12R99	26	102	RCR07G101JR
A12TP1AND2	26	5	026-4005-000342
A12TP10	26	5	026-4005-000342
A12TP3AND4	26	5	026-4005-000342
A12TP5AND6	26	5	026-4005-000342
A12TP7AND8	26	5	026-4005-000342
A12TP9	26	5	026-4005-000342
A12U1 AND2	26	29	2501375-341
A12U11	26	29	2501375-341
A12U12	26	29	2501375-341
A12U14	26	29	2501375-341
A12U16	26	29	2501375-341
A12U17	26	31	SL20447
A12U18	26	29	2501375-341
A12U20	26	29	2501375-341
A12U21	26	36	SN5433J
A12U22	26	35	4024991-341
A12U23	26	34	LH0023CG
A12U24	26	30	LM111H
A12U25	26	34	LH0023CG
A12U26	26	29	2501375-341
A12U27	26	30	LM111H
A12U28	26	37	SH76296
A12U29	26	34	LH0023CG
A12U3AND19	26	35	4024991-341
A12U4THRU6	26	29	2501375-341
A12U7AND13	26	33	4213SM
A12U8AND15	26	34	LH0023CG
A12U9AND10	26	29	2501375-341
A12VR1	26	47	E2645-2
A12VR2	26	48	1N823
A13	2	17	4047707-901
A13CR1AND2	27	46	JAN1N4148-1
A13CR10	27	49	4030058-201
A13CR11	27	49	4030058-201
A13CR12	27	49	4030058-201
A13CR13	27	49	4030058-201
A13CR14	27	46	JAN1N4148-1
A13CR15	27	46	JAN1N4148-1
A13CR16	27	46	JAN1N4148-1
A13CR17	27	46	JAN1N4148-1
A13CR18	27	46	JAN1N4148-1
A13CR19	27	46	JAN1N4148-1
A13CR20	27	46	JAN1N4148-1
A13CR21	27	46	JAN1N4148-1
A13CR22	27	46	JAN1N4148-1
A13CR23	27	46	JAN1N4148-1
A13CR24	27	46	JAN1N4148-1
A13CR25	27	46	JAN1N4148-1
A13CR3AND4	27	46	JAN1N4148-1
A13CR5AND6	27	46	JAN1N4148-1
A13CR7AND8	27	46	JAN1N4148-1
A13CR9	27	46	JAN1N4148-1
A13C1 AND7	27	19	CK14BR104K

EQUIPMENT DESIGNATOR INDEX

EQUIPMENT DESIGNATOR	FIG.	ITEM	PART NUMBER
A13C10	27	19	CK14BR104K
A13C11	27	19	CK14BR104K
A13C12	27	19	CK14BR104K
A13C13	27	19	CK14BR104K
A13C14	27	19	CK14BR104K
A13C15	27	19	CK14BR104K
A13C16	27	19	CK14BR104K
A13C17	27	19	CK14BR104K
A13C18	27	19	CK14BR104K
A13C19	27	19	CK14BR104K
A13C2AND21	27	25	M39014-01-1553
A13C20	27	17	CK13BX103K
A13C22	27	22	M7-298-116
A13C23	27	19	CK14BR104K
A13C24	27	19	CK14BR104K
A13C25	27	19	CK14BR104K
A13C26	27	19	CK14BR104K
A13C27	27	19	CK14BR104K
A13C28	27	19	CK14BR104K
A13C29	27	27	CL67BG220MPG
A13C3	27	18	CK14BX223K
A13C30	27	27	CL67BG220MPG
A13C31	27	19	CK14BR104K
A13C32	27	19	CK14BR104K
A13C33	27	27	CL67BG220MPG
A13C34	27	27	CL67BG220MPG
A13C35	27	27	CL67BG220MPG
A13C36	27	27	CL67BG220MPG
A13C37	27	27	CL67BG220MPG
A13C38	27	25	M39014-01-1553
A13C39	27	25	M39014-01-1553
A13C4	27	10	SP7-334-9-5
A13C40	27	21	CK16BR474K
A13C41	27	11	SP7-474-9-5
A13C42	27	19	CK14BR104K
A13C43	27	26	4012993-242
A13C44	27	12	SP7-105-1-5
A13C45	27	13	SP7-205-1-5
A13C46	27	13	SP7-205-1-5
A13C47	27	20	M39014-02-1415
A13C48	27	20	M39014-02-1415
A13C49	27	19	CK14BR104K
A13C5	27	15	CK12BX102K
A13C50	27	23	TNS105X075KI
A13C51	27	24	TNS1D6X020KI
A13C52	27	29	W650B1A106F
A13C53	27	25	M39014-01-1553
A13C54	27	11	SP7-474-9-5
A13C55	27	4	CK15BR474K
A13C56	27	4	CK15BR474K
A13C57	27	11	SP7-474-9-5
A13C58	27	19	CK14BR104K
A13C59	27	19	CK14BR104K
A13C6	27	14	CK12BX221K
A13C60	27	11	SP7-474-9-5
A13C61	27	16	CK12BX332K
A13C62	27	28	CL67BG101MPG
A13C63	27	28	CL67BG181MPG
A13C64	27	25	M39014-01-1553
A13C65	27	25	M39014-01-1553
A13C66	27	19	CK14BR104K
A13C67	27	25	M39014-01-1553
A13C68	27	25	M39014-01-1553
A13C69	27	25	M39014-01-1553
A13C70	27	19	CK14BR104K
A13C71	27	19	CK14BR104K
A13C72	27	19	CK14BR104K
A13C8 AND9	27	19	CK14BR104K
A13K1 AND2	27	50	M39016-9-024L
A13K3	27	51	M39016-9-054L
A13K4	27	52	M39016-13-082L
A13P1	27	2	000403-0100
A13Q1 AND2	27	44	2N2222A
A13Q10	27	44	2N2222A
A13Q11	27	45	JAN2N2946A
A13Q12	27	40	JAN2N4860
A13Q13	27	43	JAN2N718A
A13Q14	27	45	JAN2N2946A
A13Q15	27	40	JAN2N4860
A13Q16	27	45	JAN2N2946A
A13Q17	27	40	JAN2N4860
A13Q18	27	40	JAN2N4860
A13Q3	27	41	JAN2N4858
A13Q4	27	39	MU270
A13Q5THRU7	27	42	2N2907A
A13Q8 AND9	27	40	JAN2N4860
A13R1AND49	27	117	4014168-909
A13R10	27	72	NA4-10000PMD

EQUIPMENT DESIGNATOR INDEX

EQUIPMENT DESIGNATOR	FIG.	ITEM	PART NUMBER
A13R100	27	111	NA4-5110PMD
A13R101	27	75	NA4-20000PMD
A13R102	27	72	NA4-10000PMD
A13R103	27	75	NA4-20000PMD
A13R104	27	61	NA4-1000PMD
A13R105	27	72	NA4-10000PMD
A13R106	27	72	NA4-10000PMD
A13R107	27	93	NA4-0-200PMD
A13R108	27	93	NA4-0-200PMD
A13R109	27	82	NA4-33200PMD
A13R11	27	72	NA4-10000PMD
A13R110	27	111	NA4-5110PMD
A13R111	27	111	NA4-5110PMD
A13R112	27	86	NA4-49900PMD
A13R113	27	86	NA4-49900PMD
A13R114	27	89	NA4-0-100PMD
A13R115	27	89	NA4-0-100PMD
A13R116	27	100	NA4-0-499PMD
A13R117	27	100	NA4-0-499PMD
A13R118	27	75	NA4-20000PMD
A13R119	27	104	RCR07G101JR
A13R12	27	84	NA4-40200PMD
A13R120	27	75	NA4-20000PMD
A13R121	27	75	NA4-20000PMD
A13R122	27	89	NA4-0-100PMD
A13R123	27	89	NA4-0-100PMD
A13R124	27	58	NA4-750PMD
A13R125	27	60	NA4-909PMD
A13R126	27	87	NA4-68100PMD
A13R127	27	100	NA4-0-499PMD
A13R128	27	57	NA4-549PMD
A13R129	27	69	NA4-4870PMD
A13R13	27	103	RCR07G510JR
A13R130	27	93	NA4-0-200PMD
A13R131	27	62	NA4-2000PMD
A13R132	27	79	NA4-26100PMD
A13R133	27	101	GE10-1
A13R134	27	117	4014168-909
A13R135	27	117	4014168-909
A13R136	27	101	GE10-1
A13R137	27	70	NA4-4990PMD
A13R138	27	88	NA4-95300PMD
A13R139	27	72	NA4-10000PMD
A13R14	27	103	RCR07G510JR
A13R140	27	70	NA4-4990PMD
A13R141	27	88	NA4-95300PMD
A13R142	27	72	NA4-10000PMD
A13R143	27	113	RW81U1R30F
A13R144	27	72	NA4-10000PMD
A13R145	27	112	RW81U1R00F
A13R146	27	114	RWRW81U4R30F
A13R147	27	114	RWRW81U4R30F
A13R148	27	64	NA4-2430PMD
A13R149	27	111	NA4-5110PMD
A13R15	27	103	RCR07G510JR
A13R150	27	111	NA4-5110PMD
A13R151	27	86	NA4-49900PMD
A13R152	27	86	NA4-49900PMD
A13R153	27	100	NA4-0-499PMD
A13R154	27	89	NA4-0-100PMD
A13R155	27	75	NA4-20000PMD
A13R156	27	89	NA4-0-100PMD
A13R157	27	100	NA4-0-499PMD
A13R158	27	75	NA4-20000PMD
A13R159	27	75	NA4-20000PMD
A13R16	27	103	RCR07G510JR
A13R160	27	75	NA4-20000PMD
A13R161	27	75	NA4-20000PMD
A13R162	27	72	NA4-10000PMD
A13R163	27	75	NA4-20000PMD
A13R164	27	117	4014168-909
A13R165	27	83	NA4-36500PMD
A13R166	27	117	4014168-909
A13R167	27	117	4014168-909
A13R168	27	100	NA4-0-499PMD
A13R169	27	89	NA4-0-100PMD
A13R17	27	103	RCR07G510JR
A13R170	27	89	NA4-0-100PMD
A13R171	27	56	NA4-243PMD
A13R172	27	85	NA4-48700PMD
A13R173	27	59	NA4-866PMD
A13R174	27	74	NA4-11000PMD
A13R175	27	55	NA4-200PMD
A13R176	27	54	NA4-150PMD
A13R177	27	81	NA4-30100PMD
A13R178	27	65	NA4-2670PMD
A13R179	27	63	NA4-2210PMD
A13R18	27	103	RCR07G510JR

EQUIPMENT DESIGNATOR INDEX

EQUIPMENT DESIGNATOR	FIG.	ITEM	PART NUMBER
A13R180	27	75	NA4-20000PMD
A13R181	27	72	NA4-10000PMD
A13R182	27	75	NA4-20000PMD
A13R183	27	72	NA4-10000PMD
A13R19	27	103	RCR07G510JR
A13R2	27	62	NA4-2000PMD
A13R20	27	103	RCR07G510JR
A13R21	27	103	RCR07G510JR
A13R22	27	103	RCR07G510JR
A13R23	27	103	RCR07G510JR
A13R25	27	72	NA4-10000PMD
A13R26	27	75	NA4-20000PMD
A13R27	27	77	NA4-23700PMD
A13R28	27	73	NA4-10500PMD
A13R29	27	91	NA4-0-147PMD
A13R3AND24	27	75	NA4-20000PMD
A13R30	27	80	NA4-27400PMD
A13R31	27	89	NA4-0-100PMD
A13R32	27	86	NA4-49900PMD
A13R33	27	90	NA4-0-121PMD
A13R34	27	72	NA4-10000PMD
A13R35	27	68	NA4-3920PMD
A13R36	27	72	NA4-10000PMD
A13R38	27	75	NA4-20000PMD
A13R39	27	84	NA4-40200PMD
A13R4AND52	27	70	NA4-4990PMD
A13R40	27	75	NA4-20000PMD
A13R41	27	103	RCR07G510JR
A13R42	27	103	RCR07G510JR
A13R43	27	103	RCR07G510JR
A13R44	27	103	RCR07G510JR
A13R45	27	103	RCR07G510JR
A13R46	27	103	RCR07G510JR
A13R47	27	103	RCR07G510JR
A13R48	27	75	NA4-20000PMD
A13R5 AND8	27	106	RCR07G122JR
A13R50	27	76	NA4-23200PMD
A13R51	27	75	NA4-20000PMD
A13R53	27	96	NA4-0-340PMD
A13R54	27	122	NA4-0-150PMD
A13R55	27	97	NA4-0-412PMD
A13R56	27	99	NA4-0-487PMD
A13R57	27	94	NA4-0-221PMD
A13R58	27	89	NA4-0-100PMD
A13R59	27	98	NA4-0-442PMD
A13R6	27	107	RCR07G152JR
A13R60	27	95	NA4-0-261PMD
A13R61	27	100	NA4-0-499PMD
A13R62	27	100	NA4-0-499PMD
A13R63	27	102	RCR07G220JR
A13R64	27	109	RCR07G622JR
A13R65	27	108	RCR07G472JR
A13R66	27	109	RCR07G622JR
A13R67	27	108	RCR07G472JR
A13R68	27	116	NA4-0-332PMD
A13R69	27	82	NA4-33200PMD
A13R7	27	110	RCR07G103JR
A13R70	27	72	NA4-10000PMD
A13R71	27	115	RWR1W2ROF
A13R72	27	115	RWR1W2ROF
A13R73	27	113	RW01W1R3OF
A13R74	27	112	RW01W1R00F
A13R75	27	67	NA4-3090PMD
A13R76	27	116	RLR20C1201GR
A13R77	27	75	NA4-20000PMD
A13R78	27	78	NA4-25500PMD
A13R79	27	92	NA4-0-165PMD
A13R80	27	117	4014168-909
A13R81	27	117	4014168-909
A13R82	27	71	NA4-9090PMD
A13R83	27	72	NA4-10000PMD
A13R84	27	117	4014168-909
A13R85	27	117	4014168-909
A13R86	27	86	NA4-49900PMD
A13R87	27	86	NA4-49900PMD
A13R88	27	66	NA4-2800PMD
A13R89	27	66	NA4-2800PMD
A13R9AND37	27	105	RCR07G102JR
A13R90	27	86	NA4-49900PMD
A13R91	27	86	NA4-49900PMD
A13R92	27	86	NA4-49900PMD
A13R93	27	86	NA4-49900PMD
A13R94	27	86	NA4-49900PMD
A13R95	27	86	NA4-49900PMD
A13R96	27	111	NA4-5110PMD
A13R97	27	111	NA4-5110PMD
A13R98	27	86	NA4-49900PMD
A13R99	27	104	RCR07G101JR

EQUIPMENT DESIGNATOR INDEX

EQUIPMENT DESIGNATOR	FIG.	ITEM	PART NUMBER
A13TP1	27	5	026-4005-000342
A13TP10	27	5	026-4005-000342
A13TP2	27	5	026-4005-000342
A13TP3	27	5	026-4005-000342
A13TP4	27	5	026-4005-000342
A13TP5	27	5	026-4005-000342
A13TP6	27	5	026-4005-000342
A13TP7	27	5	026-4005-000342
A13TP8	27	5	026-4005-000342
A13TP9	27	5	026-4005-000342
A13U1 AND2	27	30	2501375-341
A13U10	27	30	2501375-341
A13U11	27	30	2501375-341
A13U12	27	30	2501375-341
A13U14	27	30	2501375-341
A13U16	27	30	2501375-341
A13U17	27	32	SL20447
A13U18	27	30	2501375-341
A13U20	27	30	2501375-341
A13U21	27	36	SN5433J
A13U22	27	35	4024991-341
A13U23	27	34	LH0023CG
A13U24	27	31	LM111H
A13U25	27	34	LH0023CG
A13U26	27	30	2501375-341
A13U27	27	31	LM111H
A13U28	27	37	SH76296
A13U29	27	34	LH0023CG
A13U3AND19	27	35	4024991-341
A13U4 AND5	27	30	2501375-341
A13U6 AND9	27	30	2501375-341
A13U7AND13	27	33	4213SM
A13U8AND15	27	34	LH0023CG
A13VR1	27	47	E2645-2
A13VR2	27	48	1N823
A14	3	28	4030876-901
A14CR1AND2	4	11	2503988-205
A14CR10	4	10	2503517-3
A14CR11	4	10	2503517-3
A14CR12	4	10	2503517-3
A14CR13	4	10	2503517-3
A14CR14	4	10	2503517-3
A14CR15	4	10	2503517-3
A14CR16	4	10	2503517-3
A14CR17	4	10	2503517-3
A14CR18	4	10	2503517-3
A14CR19	4	10	2503517-3
A14CR20	4	10	2503517-3
A14CR21	4	10	2503517-3
A14CR22	4	10	2503517-3
A14CR23	4	10	2503517-3
A14CR24	4	10	2503517-3
A14CR25	4	10	2503517-3
A14CR26	4	10	2503517-3
A14CR27	4	10	2503517-3
A14CR28	4	10	2503517-3
A14CR29	4	10	2503517-3
A14CR3	4	11	2503988-205
A14CR30	4	10	2503517-3
A14CR31	4	10	2503517-3
A14CR32	4	10	2503517-3
A14CR33	4	10	2503517-3
A14CR34	4	10	2503517-3
A14CR35	4	10	2503517-3
A14CR4THRU	4	10	2503517-3
A14CR9	4	10	2503517-3
A14C1THRU8	4	8	CK14BR104K
A14C15	4	9	CL67BE150MPG
A14C16THRU	4	8	CK14BR104K
A14C21	4	8	CK14BR104K
A14J1	4	5	M55302-61A40
A14J2	4	4	M55302-61A36
A14J3	4	6	M55302-61A44
A14J4	4	3	4022522-56
A14J5	4	2	4022522-54
A14Q1THRU3	4	12	2N2907A
A14Q10THRU	4	13	S18429
A14Q24	4	13	S18429
A14Q4THRU9	4	13	S18429
A14R1	4	19	RCR07G221JR
A14R10	4	21	RCR07G621JR
A14R100	4	23	RCR07G222JR
A14R101	4	23	RCR07G222JR
A14R102	4	23	RCR07G222JR
A14R11THRU	4	21	RCR07G621JR
A14R14	4	21	RCR07G621JR
A14R15THRU	4	20	RCR07G391JR
A14R19	4	20	RCR07G391JR

EQUIPMENT DESIGNATOR INDEX

EQUIPMENT DESIGNATOR	FIG.	ITEM	PART NUMBER
A14R2THRU5	4	18	RCR07G151JR
A14R20THRU	4	20	RCR07G391JR
A14R25	4	20	RCR07G391JR
A14R27THRU	4	21	RCR07G621JR
A14R32	4	21	RCR07G621JR
A14R33THRU	4	22	RCR07G102JR
A14R36	4	22	RCR07G102JR
A14R51THRU	4	23	RCR07G222JR
A14R54	4	23	RCR07G222JR
A14R55THRU	4	21	RCR07G621JR
A14R59	4	21	RCR07G621JR
A14R6THRU8	4	23	RCR07G222JR
A14R60THRU	4	20	RCR07G391JR
A14R64	4	20	RCR07G391JR
A14R65	4	21	RCR07G621JR
A14R66	4	20	RCR07G391JR
A14R67	4	23	RCR07G222JR
A14R68	4	23	RCR07G222JR
A14R69	4	20	RCR07G391JR
A14R70	4	21	RCR07G621JR
A14R71	4	22	RCR07G102JR
A14R72THRU	4	23	RCR07G222JR
A14R75	4	23	RCR07G222JR
A14R76THRU	4	20	RCR07G391JR
A14R80	4	20	RCR07G391JR
A14R81THRU	4	21	RCR07G621JR
A14R85	4	21	RCR07G621JR
A14R86THRU	4	23	RCR07G222JR
A14R89	4	23	RCR07G222JR
A14R9AND26	4	22	RCR07G102JR
A14R90THRU	4	23	RCR07G222JR
A14R93	4	23	RCR07G222JR
A14R94	4	20	RCR07G391JR
A14R95	4	23	RCR07G222JR
A14R96	4	23	RCR07G222JR
A14R97	4	21	RCR07G621JR
A14R98	4	23	RCR07G222JR
A14R99	4	23	RCR07G222JR
A14U1 AND3	4	34	4003515-451
A14U10	4	34	4003515-451
A14U12	4	34	4003515-451
A14U13	4	24	SD20218
A14U14	4	36	SN54155J
A14U15	4	36	SN54155J
A14U16	4	26	SN23805J
A14U18	4	37	314A222
A14U19	4	37	314A222
A14U2AND11	4	38	316A222
A14U20	4	30	SN24336J
A14U21	4	26	SN23805J
A14U22	4	28	SN23807J
A14U23	4	26	SN23805J
A14U24	4	31	SN23809J
A14U25	4	26	SN23805J
A14U26	4	30	SN24336J
A14U27	4	27	SN23806J
A14U28	4	27	SN23806J
A14U29	4	26	SN23805J
A14U30	4	26	SN23805J
A14U31	4	39	SN48680J
A14U32	4	39	SN48680J
A14U33	4	30	SN24336J
A14U34	4	26	SN23805J
A14U35	4	26	SN23805J
A14U36	4	31	SN23809J
A14U37	4	26	SN23805J
A14U38	4	29	SN23808J
A14U39	4	26	SN23805J
A14U4	4	33	SN89820J
A14U40	4	26	SN23805J
A14U41	4	27	SN23806J
A14U42	4	38	316A222
A14U43	4	26	SN23805J
A14U44	4	26	SN23805J
A14U45	4	40	SN5427J
A14U46	4	40	SN5427J
A14U47	4	31	SN23809J
A14U48	4	31	SN23809J
A14U49	4	40	SN5427J
A14U5 AND6	4	30	SN24336J
A14U50	4	26	SN23805J
A14U51	4	26	SN23805J
A14U52	4	27	SN23806J
A14U54	4	31	SN23809J
A14U55	4	29	SN23808J
A14U56	4	31	SN23809J
A14U57	4	29	SN23808J
A14U58	4	40	SN5427J

EQUIPMENT DESIGNATOR INDEX

EQUIPMENT DESIGNATOR	FIG.	ITEM	PART NUMBER
A14U59	4	26	SN23805J
A14U60	4	27	SN23806J
A14U61	4	26	SN23805J
A14U63	4	26	SN23805J
A14U64	4	26	SN23805J
A14U65THRU	4	32	4003485-474
A14U67	4	32	4003485-474
A14U68	4	26	SN23805J
A14U69	4	29	SN23808J
A14U7AND17	4	37	314A222
A14U70	4	26	SN23805J
A14U72	4	40	SN5427J
A14U73	4	31	SN23809J
A14U74	4	26	SN23805J
A14U75	4	27	SN23806J
A14U76	4	27	SN23806J
A14U77THRU	4	29	SN23808J
A14U79	4	29	SN23808J
A14U8 AND9	4	39	SN48680J
A14U81	4	25	4002669-475
A14U82	4	29	SN23808J
A14U83	4	25	4002669-475
A14U84	4	26	SN23805J
A14U85	4	26	SN23805J
A15 AND 16	5	2	4022135-901
A15C1THRU3	6	4	CK14BR104K
A15C4	6	3	M7-298-48
A15R1THRU5	6	5	RL07S222G
A15R10THRU	6	5	RL07S222G
A15R12	6	5	RL07S222G
A15R14	6	22	RL07S113G
A15R16	6	22	RL07S113G
A15R17	6	22	RL07S113G
A15R18	6	5	RL07S222G
A15R19	6	22	RL07S113G
A15R20	6	22	RL07S113G
A15R21	6	5	RL07S222G
A15R22	6	5	RL07S222G
A15R23	6	10	RCR07G102JR
A15R24	6	5	RL07S222G
A15R25	6	22	RL07S113G
A15R26	6	5	RL07S222G
A15R27	6	22	RL07S113G
A15R28	6	22	RL07S113G
A15R29	6	21	RL07S243G
A15R30	6	5	RL07S222G
A15R31	6	22	RL07S113G
A15R32	6	21	RL07S243G
A15R33	6	22	RL07S113G
A15R34	6	22	RL07S113G
A15R6AND13	6	10	RCR07G102JR
A15R7 AND9	6	22	RL07S113G
A15R8AND15	6	5	RL07S222G
A15U1AND21	6	12	SN23805J
A15U10	6	16	4017416-480
A15U12	6	16	4017416-480
A15U13	6	14	4002669-475
A15U14	6	16	4017416-480
A15U15	6	16	4017416-480
A15U16	6	14	4002669-475
A15U17	6	17	SN24336J
A15U18	6	16	4017416-480
A15U19	6	15	SN54H22J
A15U2	6	13	SN23810J
A15U20	6	16	4017416-480
A15U22	6	18	SN23806J
A15U23	6	18	SN23806J
A15U24	6	19	SN23808J
A15U25	6	16	4017416-480
A15U26	6	14	4002669-475
A15U27	6	19	SN23808J
A15U3 AND6	6	14	4002669-475
A15U4 AND5	6	15	SN54H22J
A15U7AND11	6	14	4002669-475
A15U8 AND9	6	16	4017416-480
A15XDS1	6	11	CS753
A15XDS2	6	11	CS753
A16C1THRU3	6	4	CK14BR104K
A16C4	6	3	M7-298-48
A16R1THRU5	6	5	RL07S222G
A16R10THRU	6	5	RL07S222G
A16R12	6	5	RL07S222G
A16R14	6	22	RL07S113G
A16R16	6	22	RL07S113G
A16R17	6	22	RL07S113G
A16R18	6	5	RL07S222G
A16R19	6	22	RL07S113G
A16R20	6	22	RL07S113G

EQUIPMENT DESIGNATOR INDEX

EQUIPMENT DESIGNATOR	FIG.	ITEM	PART NUMBER
A16R21	6	5	RL07S222G
A16R22	6	5	RL07S222G
A16R23	6	10	RCR07G102JR
A16R24	6	5	RL07S222G
A16R25	6	22	RL07S113G
A16R26	6	5	RL07S222G
A16R27	6	22	RL07S113G
A16R28	6	22	RL07S113G
A16R29	6	21	RL07S243G
A16R30	6	5	RL07S222G
A16R31	6	22	RL07S113G
A16R32	6	21	RL07S243G
A16R33	6	22	RL07S113G
A16R34	6	22	RL07S113G
A16R6AND13	6	10	RCR07G102JR
A16R7 AND9	6	22	RL07S113G
A16R8AND15	6	5	RL07S222G
A16U1AND21	6	12	SN23805J
A16U10	6	16	4017416-480
A16U12	6	16	4017416-480
A16U13	6	14	4002669-475
A16U14	6	16	4017416-480
A16U15	6	16	4017416-480
A16U16	6	14	4002669-475
A16U17	6	17	SN24336J
A16U18	6	16	4017416-480
A16U19	6	15	SN54H22J
A16U2	6	13	SN23810J
A16U20	6	16	4017416-480
A16U22	6	18	SN23806J
A16U23	6	18	SN23806J
A16U24	6	19	SN23808J
A16U25	6	16	4017416-480
A16U26	6	14	4002669-475
A16U27	6	19	SN23808J
A16U3 AND6	6	14	4002669-475
A16U4 AND5	6	15	SN54H22J
A16U7AND11	6	14	4002669-475
A16U8 AND9	6	16	4017416-480
A16XDS1	6	11	CS753
A16XDS2	6	11	CS753
A17	2	2	4048087-901
A17A1	11	4	4047701-901
A17A1CR1	14	29	JAN1N4148-1
A17A1CR10	14	30	1N5618
A17A1CR11	14	31	1N5550
A17A1CR12	14	29	JAN1N4148-1
A17A1CR13	14	31	1N5550
A17A1CR14	14	30	1N5618
A17A1CR15	14	30	1N5618
A17A1CR16	14	30	1N5618
A17A1CR17	14	30	1N5618
A17A1CR18	14	29	JAN1N4148-1
A17A1CR19	14	31	1N5550
A17A1CR2	14	31	1N5550
A17A1CR20	14	29	JAN1N4148-1
A17A1CR21	14	29	JAN1N4148-1
A17A1CR22	14	31	1N5550
A17A1CR23	14	29	JAN1N4148-1
A17A1CR24	14	29	JAN1N4148-1
A17A1CR25	14	29	JAN1N4148-1
A17A1CR26	14	31	1N5550
A17A1CR27	14	31	1N5550
A17A1CR28	14	31	1N5550
A17A1CR29	14	31	1N5550
A17A1CR3	14	29	JAN1N4148-1
A17A1CR30	14	31	1N5550
A17A1CR4	14	31	1N5550
A17A1CR5	14	29	JAN1N4148-1
A17A1CR6	14	29	JAN1N4148-1
A17A1CR7	14	29	JAN1N4148-1
A17A1CR8	14	29	JAN1N4148-1
A17A1CR9	14	30	1N5618
A17A1C1	14	11	M39014-01-1317
A17A1C10	14	9	M39003-01-2356
A17A1C11	14	10	M39014-01-1313
A17A1C12	14	9	M39003-01-2356
A17A1C13	14	9	M39003-01-2356
A17A1C14	14	10	M39014-01-1313
A17A1C15	14	10	M39014-01-1313
A17A1C16	14	10	M39014-01-1313
A17A1C17	14	16	CL67BG220MPG
A17A1C18	14	17	CL67BJ100MPG
A17A1C19	14	10	M39014-01-1313
A17A1C2	14	15	M39014-02-1310
A17A1C20	14	16	CL67BG220MPG
A17A1C21	14	14	M39014-02-1302
A17A1C22	14	15	M39014-02-1310

EQUIPMENT DESIGNATOR INDEX

EQUIPMENT DESIGNATOR	FIG.	ITEM	PART NUMBER
A17A1C23	14	15	M39014-02-1310
A17A1C24	14	15	M39014-02-1310
A17A1C25	14	13	M39014-02-1298
A17A1C27	14	17	CL67BJ100MPG
A17A1C28	14	11	M39014-01-1317
A17A1C3	14	15	M39014-02-1310
A17A1C4	14	10	M39014-01-1313
A17A1C5	14	8	137D566X9075T2
A17A1C6	14	15	M39014-02-1310
A17A1C7	14	15	M39014-02-1310
A17A1C8	14	12	M39014-02-1292
A17A1C9	14	9	M39003-01-2356
A17A1P1	14	2	4022522-70
A17A1Q1	14	23	2N2907A
A17A1Q10	14	23	2N2907A
A17A1Q11	14	22	JANTX2N3421
A17A1Q12	14	23	2N2907A
A17A1Q13	14	24	JAN2N718A
A17A1Q14	14	24	JAN2N718A
A17A1Q15	14	23	2N2907A
A17A1Q16	14	23	2N2907A
A17A1Q17	14	27	2N3439
A17A1Q18	14	23	2N2907A
A17A1Q19	14	22	JANTX2N3421
A17A1Q2	14	22	JANTX2N3421
A17A1Q20	14	28	MJ5416
A17A1Q21	14	20	2N2102
A17A1Q22	14	24	JAN2N718A
A17A1Q23	14	23	2N2907A
A17A1Q24	14	22	JANTX2N3421
A17A1Q25	14	27	2N3439
A17A1Q26	14	24	JAN2N718A
A17A1Q27	14	23	2N2907A
A17A1Q28	14	23	2N2907A
A17A1Q29	14	23	2N2907A
A17A1Q3	14	23	2N2907A
A17A1Q30	14	23	2N2907A
A17A1Q31	14	22	JANTX2N3421
A17A1Q32	14	24	JAN2N718A
A17A1Q33	14	25	SS5709H
A17A1Q34	14	27	2N3439
A17A1Q35	14	26	4008219-20
A17A1Q36	14	21	2500264-24
A17A1Q37	14	21	2500264-24
A17A1Q38	14	23	2N2907A
A17A1Q4	14	22	JANTX2N3421
A17A1Q5	14	27	2N3439
A17A1Q6	14	24	JAN2N718A
A17A1Q7	14	24	JAN2N718A
A17A1Q8	14	23	2N2907A
A17A1Q9	14	22	JANTX2N3421
A17A1R1	14	87	RCR07G182JR
A17A1R10	14	87	RCR07G182JR
A17A1R100	14	57	NA4-6650PMD
A17A1R101	14	65	NA4-20000PMD
A17A1R102	14	61	NA4-20000PMD
A17A1R103	14	62	NA4-11300PMD
A17A1R104	14	65	NA4-20000PMD
A17A1R105	14	65	NA4-20000PMD
A17A1R106	14	48	NA4-1300PMD
A17A1R107	14	81	RCR07G121JR
A17A1R108	14	87	RCR07G182JR
A17A1R109	14	73	RCR32G622JR
A17A1R11	14	96	RLR20C68R0GR
A17A1R110	14	77	RCR20G621JR
A17A1R111	14	61	NA4-10000PMD
A17A1R112	14	61	NA4-10000PMD
A17A1R113	14	97	RL07S510G
A17A1R114	14	98	RL07S221G
A17A1R115	14	80	RCR07G101JR
A17A1R116	14	100	SS-010-17
A17A1R117	14	76	RCR20G511JR
A17A1R118	14	47	NA4-1000PMD
A17A1R119	14	47	NA4-1000PMD
A17A1R12	14	87	RCR07G182JR
A17A1R120	14	89	RCR07G103JR
A17A1R121	14	101	SS-010-34
A17A1R123	14	58	NA4-7150PMD
A17A1R124	14	47	NA4-1000PMD
A17A1R125	14	53	NA4-2430PMD
A17A1R126	14	85	RCR07G102JR
A17A1R127	14	51	NA4-2000PMD
A17A1R128	14	85	RCR07G102JR
A17A1R129	14	85	RCR07G102JR
A17A1R13	14	81	RCR07G121JR
A17A1R130	14	95	RCR07G105JR
A17A1R131	14	47	NA4-1000PMD
A17A1R132	14	85	RCR07G102JR

EQUIPMENT DESIGNATOR INDEX

EQUIPMENT DESIGNATOR	FIG.	ITEM	PART NUMBER
A17A1R14	14	48	NA4-1300PMD
A17A1R15	14	96	RLR20C68R0GR
A17A1R16	14	78	RCR20G154JR
A17A1R18	14	66	NA4-21000PMD
A17A1R19	14	70	NA4-0-174PMD
A17A1R2	14	102	4014168-909
A17A1R20	14	55	NA4-3010PMD
A17A1R21	14	56	NA4-3570PMD
A17A1R22	14	74	RCR32G223JR
A17A1R23	14	74	RCR32G223JR
A17A1R24	14	93	RCR07G184JR
A17A1R25	14	52	NA4-2260PMD
A17A1R26	14	42	NA4-20PMD
A17A1R27	14	43	NA4-20-50PMD
A17A1R28	14	68	NA4-0-100PMD
A17A1R29	14	48	NA4-1300PMD
A17A1R3	14	55	NA4-3010PMD
A17A1R30	14	87	RCR07G182JR
A17A1R31	14	90	RCR07G133JR
A17A1R32	14	42	NA4-20PMD
A17A1R33	14	55	NA4-3010PMD
A17A1R34	14	64	NA4-17400PMD
A17A1R35	14	55	NA4-3010PMD
A17A1R36	14	54	NA4-2610PMD
A17A1R38	14	44	NA4-100PMD
A17A1R39	14	45	NA4-499PMD
A17A1R4	14	85	RCR07G102JR
A17A1R40	14	47	NA4-1000PMD
A17A1R41	14	50	NA4-1820PMD
A17A1R42	14	48	NA4-1300PMD
A17A1R43	14	81	RCR07G121JR
A17A1R44	14	50	NA4-1820PMD
A17A1R45	14	96	RLR20C68R0GR
A17A1R46	14	48	NA4-1300PMD
A17A1R47	14	81	RCR07G121JR
A17A1R48	14	87	RCR07G182JR
A17A1R49	14	96	RLR20C68R0GR
A17A1R5	14	84	RCR07G751JR
A17A1R50	14	46	NA4-750PMD
A17A1R51	14	49	NA4-1500PMD
A17A1R52	14	71	RCR32G102JR
A17A1R53	14	72	RCR32G222JR
A17A1R54	14	96	RLR20C68R0GR
A17A1R55	14	87	RCR07G182JR
A17A1R56	14	81	RCR07G121JR
A17A1R58	14	85	RCR07G102JR
A17A1R59	14	61	NA4-10000PMD
A17A1R6	14	75	RCR32G243JR
A17A1R60	14	69	NA4-0-150PMD
A17A1R61	14	91	RCR07G223JR
A17A1R62	14	92	RCR07G333JR
A17A1R63	14	99	RW69VR62
A17A1R64	14	50	NA4-1820PMD
A17A1R65	14	48	NA4-1300PMD
A17A1R66	14	85	RCR07G102JR
A17A1R67	14	87	RCR07G182JR
A17A1R68	14	63	NA4-11800PMD
A17A1R69	14	94	RCR07G224JR
A17A1R7	14	75	RCR32G243JR
A17A1R70	14	98	RL07S221G
A17A1R71	14	85	RCR07G102JR
A17A1R72	14	65	NA4-20000PMD
A17A1R73	14	51	NA4-2000PMD
A17A1R74	14	61	NA4-10000PMD
A17A1R75	14	65	NA4-20000PMD
A17A1R76	14	82	RCR07G241JR
A17A1R77	14	48	NA4-1300PMD
A17A1R78	14	81	RCR07G121JR
A17A1R79	14	50	NA4-1820PMD
A17A1R8	14	87	RCR07G182JR
A17A1R80	14	96	RLR20C68R0GR
A17A1R81	14	96	RLR20C68R0GR
A17A1R82	14	88	RCR07G202JR
A17A1R83	14	88	RCR07G202JR
A17A1R84	14	82	RCR07G241JR
A17A1R85	14	86	RCR07G132JR
A17A1R86	14	85	RCR07G102JR
A17A1R87	14	79	RCR07G510JR
A17A1R88	14	50	NA4-1820PMD
A17A1R89	14	83	RCR07G331JR
A17A1R9	14	81	RCR07G121JR
A17A1R90	14	79	RCR07G510JR
A17A1R91	14	67	NA4-30100PMD
A17A1R92	14	86	RCR07G132JR
A17A1R93	14	102	4014168-909
A17A1R94	14	60	NA4-9090PMD
A17A1R95	14	85	RCR07G102JR
A17A1R96	14	59	NA4-7870PMD

EQUIPMENT DESIGNATOR INDEX

EQUIPMENT DESIGNATOR	FIG.	ITEM	PART NUMBER
A17A1R97	14	87	RCR07G182JR
A17A1R98	14	85	RCR07G102JR
A17A1R99	14	85	RCR07G102JR
A17A1TP1	14	3	026-4005-000342
A17A1TP10	14	3	026-4005-000342
A17A1TP2	14	3	026-4005-000342
A17A1TP3	14	3	026-4005-000342
A17A1TP4	14	3	026-4005-000342
A17A1TP5	14	3	026-4005-000342
A17A1TP6	14	3	026-4005-000342
A17A1TP7	14	3	026-4005-000342
A17A1TP8	14	3	026-4005-000342
A17A1TP9	14	3	026-4005-000342
A17A1U1	14	18	2501375-341
A17A1U2	14	18	2501375-341
A17A1U3	14	19	SL20369
A17A1U4	14	19	SL20369
A17A1U5	14	18	2501375-341
A17A1U6	14	19	SL20369
A17A1U7	14	19	SL20369
A17A1U8	14	19	SL20369
A17A1VR1	14	32	1N4467
A17A1VR10	14	36	E2651-2
A17A1VR11	14	41	DZ40506R
A17A1VR2	14	38	DZ740609G
A17A1VR3	14	35	E2646-2
A17A1VR4	14	33	1N4469
A17A1VR5	14	34	1N4475
A17A1VR6	14	37	1N941B
A17A1VR7	14	40	DZ40506M
A17A1VR8	14	39	DZ40506J
A17A1VR9	14	36	E2651-2
A17A2	11	2	4048089-901
A17A2CR1	12	9	1N5550
A17A2CR10	12	21	JAN1N4148-1
A17A2CR2	12	9	1N5550
A17A2CR3	12	10	UTG1533
A17A2CR4	12	11	1N5618
A17A2CR5	12	11	1N5618
A17A2CR6	12	9	1N5550
A17A2CR7	12	9	1N5550
A17A2CR8	12	9	1N5550
A17A2CR9	12	9	1N5550
A17A2C1	12	2	TVA1319-9
A17A2C2	12	3	CL67BN220MPG
A17A2C3	12	4	CK15BR154K
A17A2C4	12	5	CL67BE271MPG
A17A2C5	12	6	TVA1578
A17A2C6	12	7	43D202G050KD1
A17A2C7	12	7	43D202G050KD1
A17A2E1THRU	12	8	MS17172-8
A17A2E6	12	8	MS17172-8
A17A2L1	12	12	H321-1
A17A2L2	12	22	MS75089-20
A17A2Q1	12	13	2N6274
A17A2Q2	12	14	2N3739
A17A2Q3	12	40	2N6298
A17A2Q4	12	16	2N6300
A17A2Q5	12	15	2N6315
A17A2Q6	12	35	2N6316
A17A2R1	12	18	RW81UR120F
A17A2R2	12	19	RCR20G471JR
A17A2R3	12	38	RCR32G913JR
A17A2R4	12	39	RCR20G751JR
A17A2R5	12	36	RWR84S2R61FR
A17A2R6	12	37	RWR84S2R74FR
A17A2VR1	12	17	UZ6110
A17A3	11	3	4030927
A17A3C1	13	3	M7-298-99
A17A3C2	13	4	CK12BX102K
A17A3E1	13	9C	MS35431-3
A17A3J1	13	9A	MMM14SGDS
A17A3Q1	13	2	T4115D
A17A3R1	13	5	RCR20G101JR
A17A3R2	13	6	RCR07G102JR
A17C1 AND2	11	10	CL67BL560MPG
A17C8	11	21	TVA1318-5
A17E1	11	6D	SE26XF01
A17J2	11	6A	MMM75SGDS
A17P1	11	6C	M55302-55A70M
A17R1 AND2	11	9	RW69V330
A17R3 AND4	11	41	RW67V560
A17R5 AND6	11	40	RW69V301
A17T1	11	7	H314
A17T2	11	8	H654
A17WT1AND2	11	6D	SE26XF01
A18	2	19	4026197-907
A18	2	19A	4026197-909

EQUIPMENT DESIGNATOR INDEX

EQUIPMENT DESIGNATOR	FIG.	ITEM	PART NUMBER
A19	2	20	4026197-908
A19	2	20A	4026197-910
A2	2	10	4021532-901
A2C1 AND 3	18	5	CK14BR104K
A2C2 AND 4	18	6	CL67BE330MPG
A2P1	18	3	4008387
A2R1	18	18	NA4-294PMD
A2U1	18	7	CL631F
A2U10AND18	18	9	4002669-475
A2U11AND17	18	13	4002646-442
A2U12AND13	18	11	SN24244J
A2U14AND20	18	11	SN24244J
A2U15AND32	18	14	SN23808J
A2U16	18	8	CL630F
A2U19	18	9	4002669-475
A2U2 AND 5	18	8	CL630F
A2U21AND23	18	15	SN23805J
A2U22AND24	18	16	SN23806J
A2U25AND35	18	15	SN23805J
A2U27AND37	18	11	SN24244J
A2U28AND31	18	16	SN23806J
A2U29AND30	18	12	SN23809J
A2U3 AND 8	18	9	4002669-475
A2U33AND36	18	16	SN23806J
A2U38	18	15	SN23805J
A2U39	18	11	SN24244J
A2U4 AND34	18	10	CL634F
A2U40	18	14	SN23808J
A2U41	18	16	SN23806J
A2U6 AND 7	18	11	SN24244J
A2U9 AND26	18	12	SN23809J
A3 AND 4	2	11	4021534-901
A3C1 AND 3	19	5	CK14BR104K
A3C2 AND 4	19	6	CL67BE330MPG
A3P1	19	3	4008387
A3R1 THRU4	19	7	RCR07G821JR
A3R13AND14	19	7	RCR07G821JR
A3R15AND17	19	7	RCR07G821JR
A3R16	19	8	RL07S102G
A3R18 THRU	19	8	RL07S102G
A3R25	19	8	RL07S102G
A3R26	19	9	NA4-287PMD
A3R5THRU12	19	8	RL07S102G
A3U12AND38	19	14	SN23809J
A3U13AND16	19	13	SN24244J
A3U14AND15	19	12	SN54H62J
A3U17AND31	19	15	4002669-475
A3U18AND23	19	11	SN23806J
A3U19AND22	19	13	SN24244J
A3U2 AND 3	19	10	4003485-474
A3U20AND21	19	12	SN54H62J
A3U24AND29	19	16	27502ADM
A3U25AND28	19	13	SN24244J
A3U26AND27	19	12	SN54H62J
A3U30AND35	19	17	SN5483AJ00
A3U32AND37	19	18	CL631F
A3U33	19	19	SN23808J
A3U34	19	15	4002669-475
A3U36AND41	19	16	27502ADM
A3U39	19	14	SN23809J
A3U40	19	18	CL631F
A3U7 AND10	19	13	SN24244J
A3U8 AND 9	19	12	SN54H62J
A4C1 AND 3	19	5	CK14BR104K
A4C2 AND 4	19	6	CL67BE330MPG
A4P1	19	3	4008387
A4R1 THRU4	19	7	RCR07G821JR
A4R13AND14	19	7	RCR07G821JR
A4R15AND17	19	7	RCR07G821JR
A4R16	19	8	RL07S102G
A4R18 THRU	19	8	RL07S102G
A4R25	19	8	RL07S102G
A4R26	19	9	NA4-287PMD
A4R5THRU12	19	8	RL07S102G
A4U12AND38	19	14	SN23809J
A4U13AND16	19	13	SN24244J
A4U14AND15	19	12	SN54H62J
A4U17AND31	19	15	4002669-475
A4U18AND23	19	11	SN23806J
A4U19AND22	19	13	SN24244J
A4U2 AND 3	19	10	4003485-474
A4U20AND21	19	12	SN54H62J
A4U24AND29	19	16	27502ADM
A4U25AND28	19	13	SN24244J
A4U26AND27	19	12	SN54H62J
A4U30AND35	19	17	SN5483AJ00
A4U32AND37	19	18	CL631F
A4U33	19	19	SN23808J

EQUIPMENT DESIGNATOR INDEX

EQUIPMENT DESIGNATOR	FIG.	ITEM	PART NUMBER
A4U34	19	15	4002669-475
A4U36AND41	19	16	27502ADM
A4U39	19	14	SN23809J
A4U40	19	18	CL631F
A4U7 AND10	19	13	SN24244J
A4U8 AND 9	19	12	SN54H62J
A5	2	84	1900312-901
A5C1	20	30	SP7-474-9-5
A5C11	20	29	M39014/05-2116
A5C12	20	28	M39014-05-2043
A5C13AND14	20	27	M39014-01-1553
A5C15AND16	20	27	M39014-01-1553
A5C17AND18	20	27	M39014-01-1553
A5C19AND20	20	25	M39006-09-8283
A5C2THRU 4	20	27	M39014-01-1553
A5C21	20	26	M39006-09-8260
A5C5 AND 6	20	29	M39014/05-2116
A5C7AND 10	20	28	M39014-05-2043
A5C8 AND 9	20	27	M39014-01-1553
A5P1	20	2	4008387
A5R1 AND 7	20	20	RCR05G103JS
A5R10AND12	20	20	RCR05G103JS
A5R11	20	21	RCR07G102JR
A5R13AND14	20	19	RCR07G510JR
A5R2	20	22	NA4-100PMD
A5R3 AND 5	20	23	NA4-18200PMD
A5R4 AND 6	20	24	NA4-13000PMD
A5R8	20	23	NA4-18200PMD
A5R9	20	24	NA4-13000PMD
A5TP1	20	4	026-4005-000342
A5U1	20	18	LH0023CG
A5U10AND15	20	8	SNJ54LS244J
A5U11AND13	20	5	SNJ54LS00J
A5U14	20	12	SNJ54LS273J
A5U16	20	17	SNJ54LS123J
A5U17	20	10	M38510-30007BCX
A5U18AND28	20	8	SNJ54LS244J
A5U19	20	11	M38510-30703BEX
A5U2	20	16	SN24336J
A5U20	20	6	SNJ54LS04J
A5U21	20	15	M38510-30301BCX
A5U22	20	14	SNJ54LS157J
A5U23	20	7	SN13717
A5U24AND25	20	13	IM7114L2CJN
A5U26AND27	20	13	IM7114L2CJN
A5U29AND30	20	8	SNJ54LS244J
A5U3 AND 6	20	9	SNJ54LS10J
A5U31	20	8	SNJ54LS244J
A5U4 AND 7	20	5	SNJ54LS00J
A5U5 AND 9	20	5	SNJ54LS00J
A5U8 AND12	20	17	SNJ54LS123J
A6	2	12	1900308-901
A6CR1	21	15	JAN1N4148-1
A6C1 THRU6	21	13	M39014-01-1553
A6C7	21	14	CL67BE150MPG
A6P1	21	2	4008387
A6Q1 THRU9	21	16	2N3762
A6Q10	21	17	S18429
A6R1 AND 3	21	6	RCR07G151JR
A6R12AND14	21	6	RCR07G151JR
A6R13AND15	21	7	RCR05G241JS
A6R16AND18	21	6	RCR07G151JR
A6R17	21	7	RCR05G241JS
A6R19AND28	21	7	RCR05G241JS
A6R2 AND 4	21	7	RCR05G241JS
A6R20AND24	21	8	RCR07G102JR
A6R21AND22	21	9	RCR05G103JS
A6R23	21	12	RCR07G122JR
A6R25AND26	21	8	RCR07G102JR
A6R27	21	6	RCR07G151JR
A6R29AND30	21	9	RCR05G103JS
A6R31	21	10	RCR05G622JS
A6R32	21	11	RCR05G302JS
A6R5 THRU7	21	9	RCR05G103JS
A6R8 AND10	21	6	RCR07G151JR
A6R9 AND11	21	7	RCR05G241JS
A6S1 THRU4	21	18	CTS206-008
A6U11	21	26	M38510-30302BCX
A6U12AND21	21	27	SNJ54LS244J
A6U13	21	32	4050400-103
A6U14	21	33	4050400-104
A6U15AND17	21	24	SNJ54LS10J
A6U16AND18	21	23	M38510-30007BCX
A6U19	21	34	4050400-105
A6U20	21	35	4050400-106
A6U22	21	36	4050400-107
A6U23	21	37	4050400-108
A6U24AND26	21	19	SN13717

EQUIPMENT DESIGNATOR INDEX

EQUIPMENT DESIGNATOR	FIG.	ITEM	PART NUMBER
A6U25AND39	21	22	SNJ54LS04J
A6U27	21	21	M38510-30502BCX
A6U28	21	38	4050400-109
A6U29	21	39	4050400-110
A6U3 AND 6	21	19	SN13717
A6U30AND32	21	19	SN13717
A6U31	21	29	M38510-303018CX
A6U33	21	28	SD70578
A6U34	21	40	4050400-111
A6U35	21	41	4050400-112
A6U36	21	25	SNJ54LS00J
A6U37	21	42	4050400-113
A6U38	21	43	4050400-114
A6U40	21	22	SNJ54LS04J
A6U7 AND10	21	25	SNJ54LS00J
A6U8	21	30	4050400-101
A6U9	21	31	4050400-102
A6XU1	21	20	4003102-228
A6XU2	21	20	4003102-228
A6XU4	21	20	4003102-228
A6XU5	21	20	4003102-228
A7	2	13	4022594-901
A7CR1THRU3	22	6	JAN1N4148-1
A7C1 AND 3	22	3	CL67BG220MPG
A7C15	22	11	CL67BJ050MPG
A7C16	22	39	CK12BX102K
A7C17	22	5	CL67BH151MPG
A7C2 AND18	22	4	CK148R104K
A7C4 AND 5	22	4	CK148R104K
A7C6	22	3	CL67BG220MPG
A7C7THRU14	22	4	CK148R104K
A7L1 AND 2	22	44	MS75089-23
A7P1	22	36	4008387
A7Q1	22	7	S18429
A7Q2 AND 4	22	8	2500835-21
A7Q3 AND 6	22	9	2N2907A
A7Q5	22	10	2N4858
A7Q7 AND 8	22	43	RS1741
A7R1	22	12	RCR20G622JR
A7R10	22	17	RL07S202G
A7R12	22	19	RL07S104G
A7R13 THRU	22	20	RL07S103G
A7R17	22	20	RL07S103G
A7R18	22	13	RCR07G102JR
A7R2 AND 3	22	13	RCR07G102JR
A7R20AND22	22	46	NA4-20000PMO
A7R21AND23	22	45	4003509-915
A7R4	22	16	RL07S511G
A7R5 AND 6	22	13	RCR07G102JR
A7R7	22	41	RL07S203G
A7R8 AND11	22	15	4014168-909
A7R9 AND19	22	14	RCR07G203JR
A7U1 AND 3	22	23	SN23805J
A7U10AND28	22	25	SN54H05J
A7U11AND27	22	23	SN23805J
A7U12AND21	22	26	SD20218
A7U13	22	27	SN54132J00
A7U14AND17	22	42	SN54H04J
A7U15AND16	22	28	SN23808J
A7U18	22	29	SN5433J
A7U19	22	30	DM54L04J
A7U2 AND 4	22	24	SN23809J
A7U20	22	31	SN24772
A7U22AND23	22	32	SN74162J
A7U24 THRU	22	28	SN23808J
A7U26	22	28	SN23808J
A7U29AND30	22	42	SN54H04J
A7U31AND33	22	33	4002669-475
A7U32	22	34	700685
A7U34	22	33	4002669-475
A7U35 THRU	22	28	SN23808J
A7U39	22	28	SN23808J
A7U5	22	38	SN23807J
A7U6 THRU8	22	23	SN23805J
A7U9	22	24	SN23809J
A7VR1	22	21	E2641-2
A7VR2	22	22	E2651-2
A8	2	14	4047699-901
A8CR1 AND2	23	42	1N5618
A8CR10	23	40	JAN1N4148-1
A8CR11	23	40	JAN1N4148-1
A8CR12	23	40	JAN1N4148-1
A8CR13	23	40	JAN1N4148-1
A8CR14	23	40	JAN1N4148-1
A8CR15	23	40	JAN1N4148-1
A8CR16	23	40	JAN1N4148-1
A8CR17	23	40	JAN1N4148-1
A8CR18	23	40	JAN1N4148-1

EQUIPMENT DESIGNATOR INDEX

EQUIPMENT DESIGNATOR	FIG.	ITEM	PART NUMBER
A8CR3THRU9	23	40	JAN1N4148-1
A8C1 AND 6	23	8	M39014-01-1553
A8C10AND11	23	8	M39014-01-1553
A8C12AND13	23	8	M39014-01-1553
A8C14AND15	23	8	M39014-01-1553
A8C16AND17	23	8	M39014-01-1553
A8C18AND19	23	8	M39014-01-1553
A8C2	23	44	M39014-01-1299
A8C20AND27	23	6	M39018-01-0731
A8C21AND22	23	8	M39014-01-1553
A8C23AND24	23	8	M39014-01-1553
A8C25AND26	23	8	M39014-01-1553
A8C28AND29	23	8	M39014-01-1553
A8C3 AND 4	23	9	M39014-02-1310
A8C5 AND 7	23	7	M7-298-136
A8C8 AND 9	23	8	M39014-01-1553
A8L1 AND 2	23	10	MS75089-23
A8P1	23	2	4008387
A8Q1 AND 2	23	43	S18429
A8R1	23	35	RCR05G102JS
A8R11	23	31	NA4-60400PMD
A8R12AND17	23	38	RCR05G103JS
A8R13AND14	23	36	RCR05G112JS
A8R15AND16	23	37	RCR05G222JS
A8R18AND27	23	38	RCR05G103JS
A8R19AND20	23	39	RCR05G303JS
A8R2 THRU6	23	38	RCR05G103JS
A8R21AND22	23	39	RCR05G303JS
A8R23AND24	23	34	RCR05G241JS
A8R25AND26	23	34	RCR05G241JS
A8R28AND29	23	38	RCR05G103JS
A8R30	23	33	RCR07G472JR
A8R31AND32	23	38	RCR05G103JS
A8R33	23	38	RCR05G103JS
A8R7AND10	23	30	NA4-5110PMD
A8R8 AND 9	23	32	NA4-0-200PMD
A8U1 AND 6	23	21	M38510-31401BEX
A8U10AND20	23	16	M38510-30003BCX
A8U12	23	14	M38510-30302BCX
A8U16AND17	23	17	M38510-30005BCX
A8U18	23	11	SN24336J
A8U19	23	17	M38510-30005BCX
A8U2 AND 4	23	15	M38510-30001BCX
A8U21AND22	23	15	M38510-30001BCX
A8U23AND31	23	15	M38510-30001BCX
A8U24AND26	23	18	M38510-30007BCX
A8U25AND28	23	13	M38510-30301BCX
A8U27	23	12	SN34251J
A8U29AND32	23	16	M38510-30003BCX
A8U3 AND11	23	20	M38510-30102BCX
A8U30	23	18	M38510-30007BCX
A8U33AND43	23	22	M38510-30903BEX
A8U34	23	19	M38510-30502BCX
A8U35	23	13	M38510-30301BCX
A8U36AND40	23	26	SNJ54LS273J
A8U37	23	28	316A472
A8U38AND39	23	23	IM7114L2CJN
A8U41AND42	23	23	IM7114L2CJN
A8U44AND45	23	26	SNJ54LS273J
A8U46AND47	23	27	SNJ54LS244J
A8U48AND53	23	16	M38510-30003BCX
A8U49AND50	23	22	M38510-30903BEX
A8U5 AND14	23	17	M38510-30005BCX
A8U51AND52	23	27	SNJ54LS244J
A8U54AND55	23	27	SNJ54LS244J
A8U56AND57	23	15	M38510-30001BCX
A8U58AND59	23	25	ER2055S
A8U60AND61	23	29	316A103
A8U62AND63	23	27	SNJ54LS244J
A8U64AND65	23	24	SNJ54LS373J
A8U7 AND15	23	15	M38510-30001BCX
A8U8	23	21	M38510-31401BEX
A8U9 AND13	23	13	M38510-30301BCX
A8VR1	23	41	JANTX1N750A
A9	2	15	4023083-901
A9C1 AND 4	24	5	CK12BX101K
A9C13AND14	24	9	CK12BX103K
A9C15AND16	24	10	CL67BG220MPG
A9C2	24	6	CK12BX222K
A9C3	24	7	CK14BR224K
A9C5THRU12	24	8	CK14BR104K
A9P1	24	3	4008387
A9R1	24	11	RCR07G102JR
A9R2	24	38	NA4-7150PMD
A9R3 AND 4	24	12	NA4-20000PMD
A9R5	24	13	NA4-4990PMD
A9R6THRU13	24	11	RCR07G102JR
A9U1 AND24	24	15	SN54393J

EQUIPMENT DESIGNATOR INDEX

EQUIPMENT DESIGNATOR	FIG.	ITEM	PART NUMBER
A9U11	24	21	SN54H103J00
A9U13	24	29	CL630F
A9U14	24	23	SN54293J00
A9U15AND51	24	22	SN23805J
A9U16	24	24	SN54132J00
A9U17AND18	24	25	SN23806J
A9U19AND30	24	26	4017936-457
A9U2 AND10	24	37	SN74S197N
A9U20 THRU	24	23	SN54293J00
A9U23	24	23	SN54293J00
A9U25AND26	24	25	SN23806J
A9U28AND39	24	27	SN24336J
A9U29	24	28	SN23810J
A9U3	24	17	970-3575-0
A9U31AND32	24	26	4017936-457
A9U33	24	15	SN54393J
A9U34	24	30	SN5427J
A9U35AND42	24	25	SN23806J
A9U36AND45	24	31	4002669-475
A9U37	24	19	SN23808J
A9U38	24	32	SN54H05J
A9U4 AND 5	24	16	SN54197J
A9U40	24	27	SN24336J
A9U41AND50	24	33	SN54123J00
A9U43AND44	24	25	SN23806J
A9U46 THRU	24	19	SN23808J
A9U49	24	19	SN23808J
A9U6	24	18	CL632F
A9U7 AND12	24	34	CL631F
A9U8	24	20	SN54H74J
A9U9 AND27	24	19	SN23808J
B1	15	4	026982
E1 THRU 4	9	9	MS35431-3
E5	16	2C	2554039-1
E6	2	79	MS35431-5
FL1 AND 2	16	4	51-320-025
F1	2	36	F02B250V11-2AS
F1	2	37	F02B125V3AS
F1	3	40A	F02B250V2AS
F2	3	40A	F02B250V2AS
J1	9	3	DL1-156RW4
J2	9	4	2500970-95
J3	9	5	57-20240-2
J4	9	6	2500970-1
L1	8	6	100243-2
L2	7	6	100243-1
P1	3	37A	M55302-62A40M
P1	25	1B	4038433
P2	25	1C	4004295-95
P2	5	3A	M5302A36M
P3	3	38A	M55302-62A44M
P4 AND 5	3	40E	MMM26PC05E
S1 AND 2	8	3	4046859-801
S1 THRU 4	3	2	513-0406-001
S11	3	7	8S766
S12 THRU14	3	2	513-0406-001
S16	3	14	513-1406-001
S17	3	2	513-0406-001
S18 THRU20	3	11	513-0806-001
S3 AND 4	7	3	4046859-801
S5	3	5	W101P6
S5	8	2	4046859-301
S6	7	2	4046859-301
S6 AND 7	3	11	513-0606-001
S7	8	1A	4046859-201
S8	7	1A	4046859-201
S8 AND 10	3	6	28S96
S9	1	6	241123-24VDC
S9	3	16	8S760
TB1	8	8	0370-16
TB2	8	7	351-21-05-021
TB3	7	8	0370-16
TB4	7	7	351-21-05-021
TB5	2	46	351-21-06-021
U1 AND 2	2-	27	SM1136
U4 AND 5	2-	27	SM1136
XF1	16	3	FHN20G

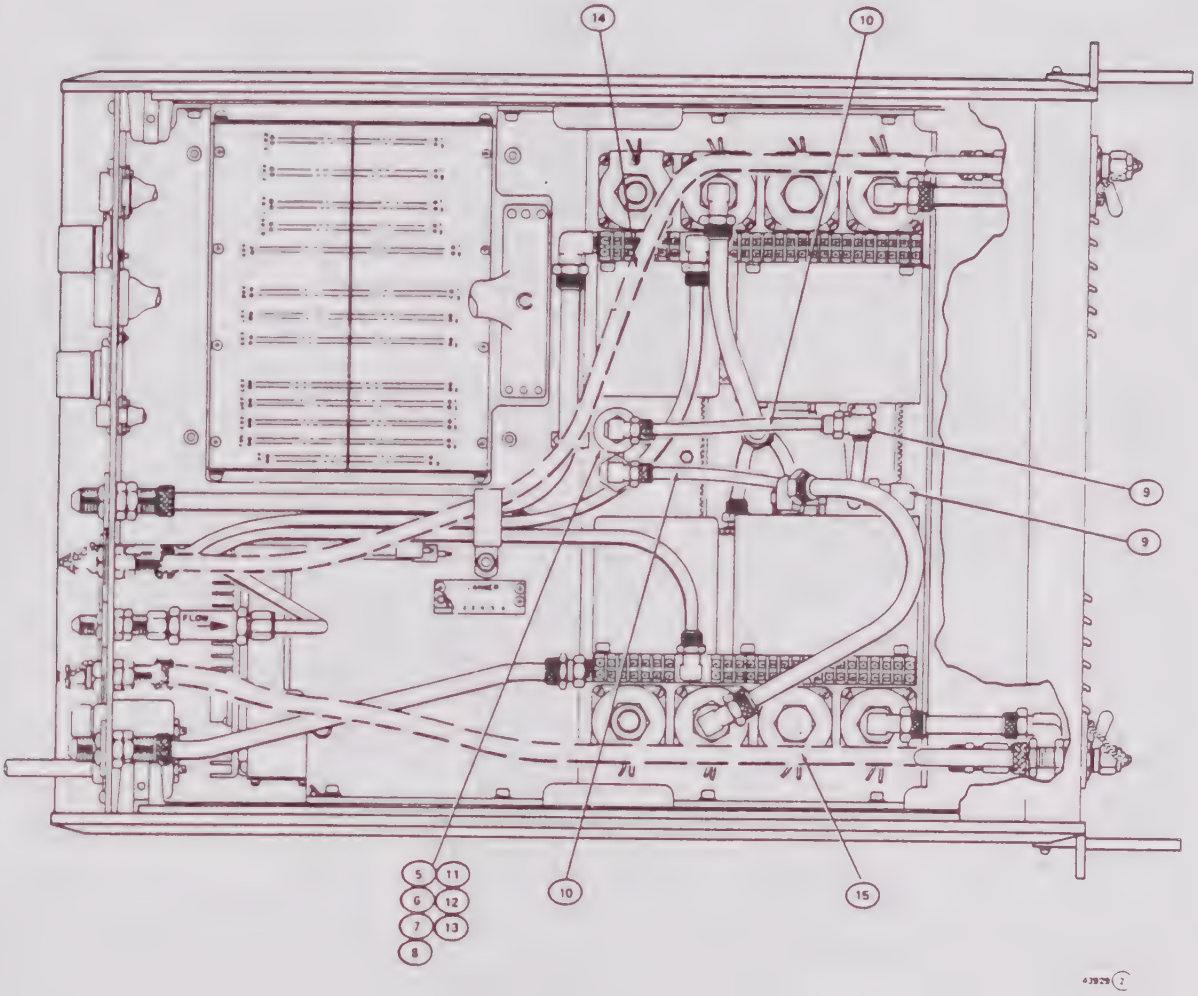

Air Data Tester Assembly
Figure 5-1 (Sheet 1 of 2)

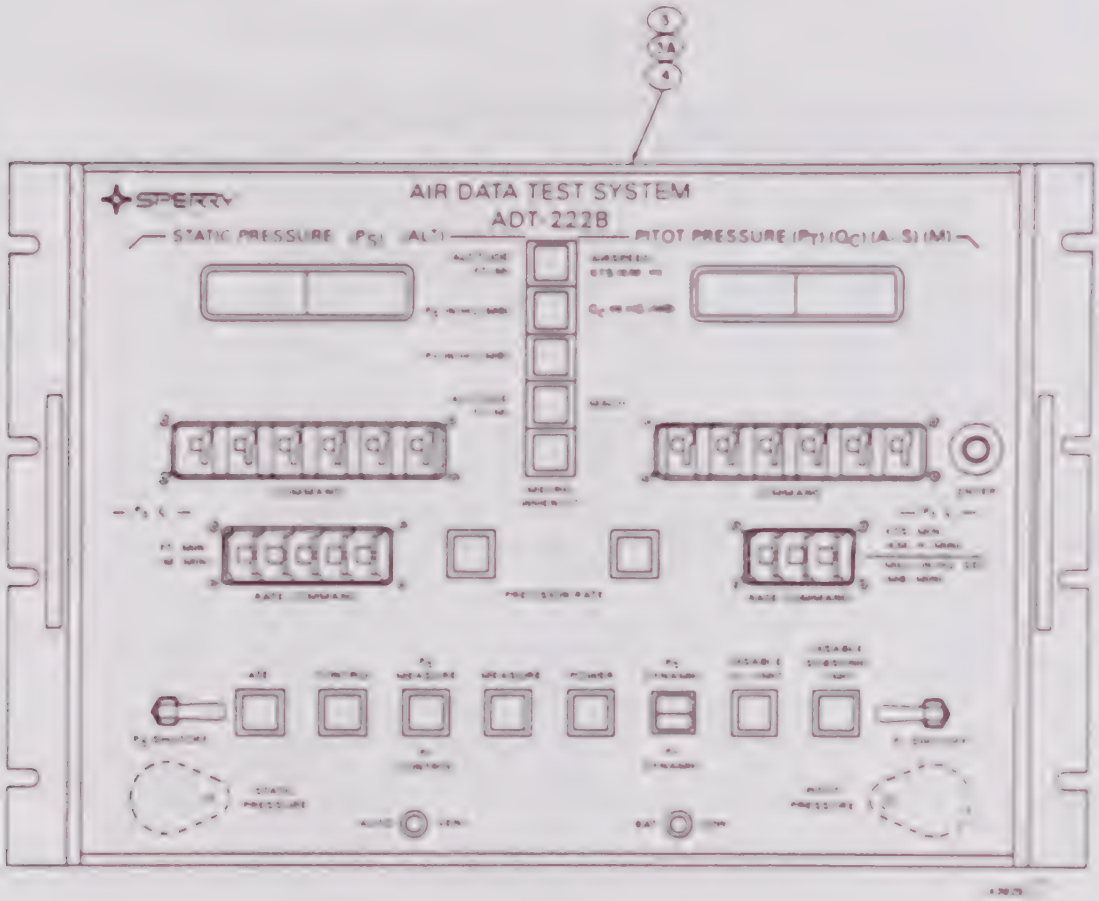

Air Data Tester Assembly
Figure 5-1 (Sheet 2)

FIG. ITEM	PART NUMBER	1234567 NOMENCLATURE	EFF CODE	UNITS PER ASSY

USABLE ON CODES

CODE	PART NUMBER	CODE	PART NUMBER
A	4047505-211	B	4047505-212
C	4047505-213	D	4047505-214
E	4047505-221	F	4047505-222
G	4047505-223	H	4047505-224
I	4047505-411	J	4047505-412
K	4047505-413	L	4047505-414
M	4047505-421	N	4047505-422
O	4047505-423	P	4047505-424

1-	1	4047505-211	TESTER ASSEMBLY,AIR DATA (CALIBRATED FOR DRY AIR)	A	RF
-	1	4047505-212	TESTER ASSEMBLY,AIR DATA (CALIBRATED FOR DRY AIR)	B	RF
-	1	4047505-213	TESTER ASSEMBLY,AIR DATA (CALIBRATED FOR DRY NITROGEN)	C	RF
-	1	4047505-214	TESTER ASSEMBLY,AIR DATA (CALIBRATED FOR DRY NITROGEN)	D	RF
-	1	4047505-221	TESTER ASSEMBLY,AIR DATA (CALIBRATED FOR DRY AIR)	E	RF
-	1	4047505-222	TESTER ASSEMBLY,AIR DATA (CALIBRATED FOR DRY AIR)	F	RF
-	1	4047505-223	TESTER ASSEMBLY,AIR DATA (CALIBRATED FOR DRY NITROGEN)	G	RF
-	1	4047505-224	TESTER ASSEMBLY,AIR DATA (CALIBRATED FOR DRY NITROGEN)	H	RF
-	1	4047505-411	TESTER ASSEMBLY,AIR DATA (CALIBRATED FOR DRY AIR)	I	RF
-	1	4047505-412	TESTER ASSEMBLY,AIR DATA (CALIBRATED FOR DRY AIR)	J	RF
-	1	4047505-413	TESTER ASSEMBLY,AIR DATA (CALIBRATED FOR DRY NITROGEN)	K	RF
-	1	4047505-414	TESTER ASSEMBLY,AIR DATA (CALIBRATED FOR DRY NITROGEN)	L	RF
-	1	4047505-421	TESTER ASSEMBLY,AIR DATA (CALIBRATED FOR DRY AIR)	M	RF
-	1	4047505-422	TESTER ASSEMBLY,AIR DATA (CALIBRATED FOR DRY AIR)	N	RF
-	1	4047505-423	TESTER ASSEMBLY,AIR DATA (CALIBRATED FOR DRY NITROGEN)	O	RF
-	1	4047505-424	TESTER ASSEMBLY,AIR DATA (CALIBRATED FOR DRY NITROGEN)	P	RF

- ITEM NOT ILLUSTRATED

	FIG. ITEM	PART NUMBER	NOMENCLATURE 1234567	EFF CODE	UNITS PER ASSY
1-	2	4028446-901	.INTERFACE OPTION,ASCII (SEE FIG 2 ITEM 15E FOR LOCATION)	I-M	1
-	2A	4027467-901	.CIRCUIT CARD ASSEMBLY- ECA ASCII INTERFACE (SEE FIG.2 ITEM 15F FOR LOCATION)	E-H N,O	1
	3	4047505-200	.TESTER ASSEMBLY,AIR DATA	A-H	1
	3A	4047505-400	.TESTER ASSEMBLY,AIR DATA	I-P	1
	4	4047505-100	..TESTER ASSEMBLY,AIR DATA (SEE FIG.2 FOR DETAILS)		1
	5	81C1-8	..VALVE (V30327) (SPN 4046868-12)		1
	6	241123-24VDC	..VALVE (V28262) (SPN 4046871)		1
	7	B2ME	..FITTING,MALE ELBOW (V11649) (SPN 4046866-12)		1
	8	B400-2-2KN	..ELBOW (V02570) (SPN 4022531-1)		2
R	9	B400-2-4KN	..ELBOW,PIPE TO TUBE (V02570) (SPN 4022531-3)		2
	10	B405-170	..INSERT (V02570) (SPN 4013152-1)		4
	11	MS51957-44	..SCREW PNH CRES 8-32X7-16 (SPN 0919-44)		2
	12	MS35338-137	..WASHER,LOCK CRES 0.164 ID (SPN 0164-8)		2
	13	MS15795-807	..WASHER,FLAT CRES 0.188 ID (SPN 0770-8)		2
	14	324607	..TERMINAL,LUG (V00779) (SPN 632523-34)		2
R	15	B605-4	..INSERT (V02570) (SPN 4013152-2)		4

- ITEM NOT ILLUSTRATED

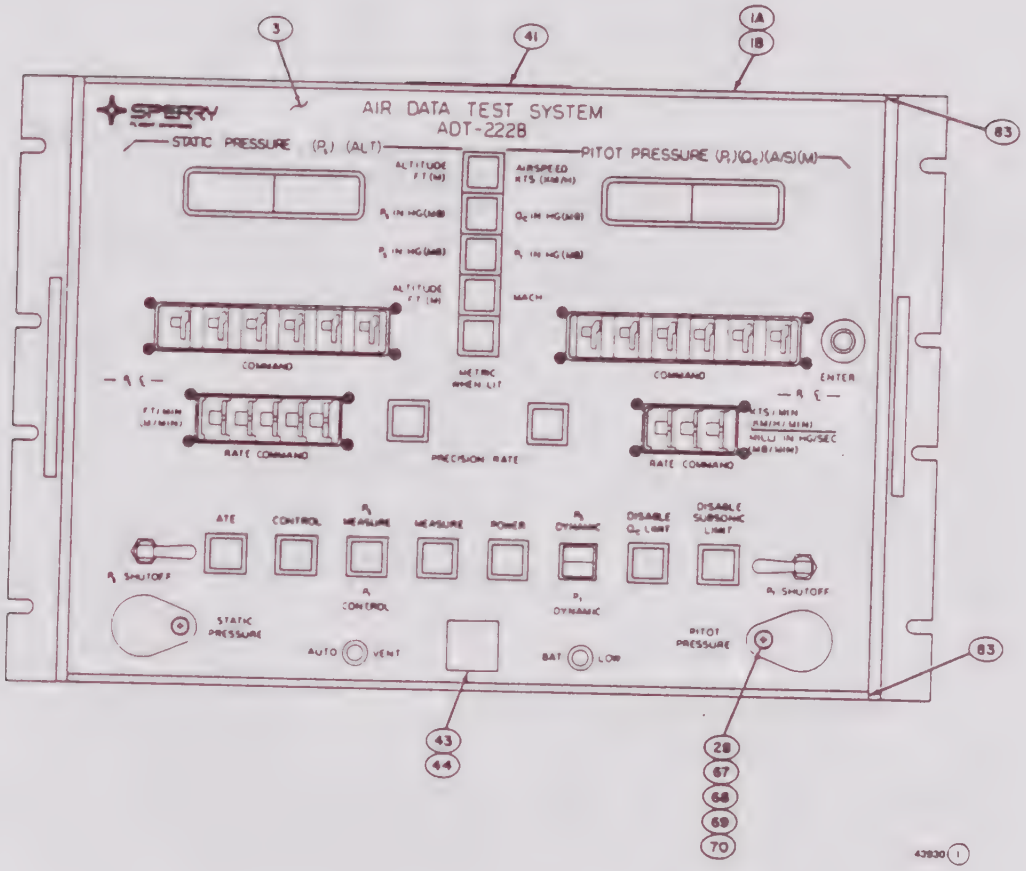

Air Data Tester Assembly
Figure 5-2 (Sheet 1 of 4)

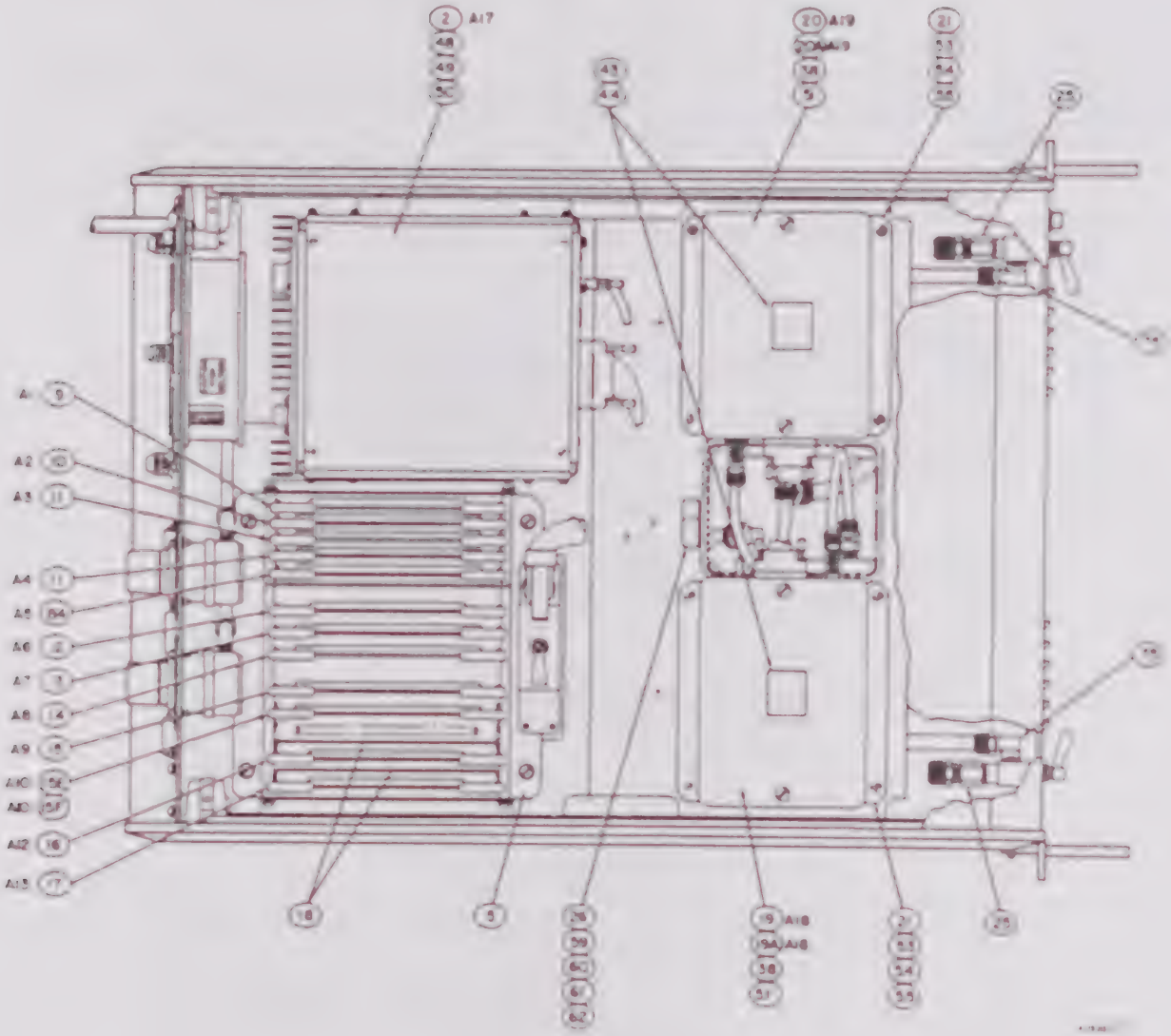

Air Data Tester Assembly
Figure 5-2 (Sheet 2)

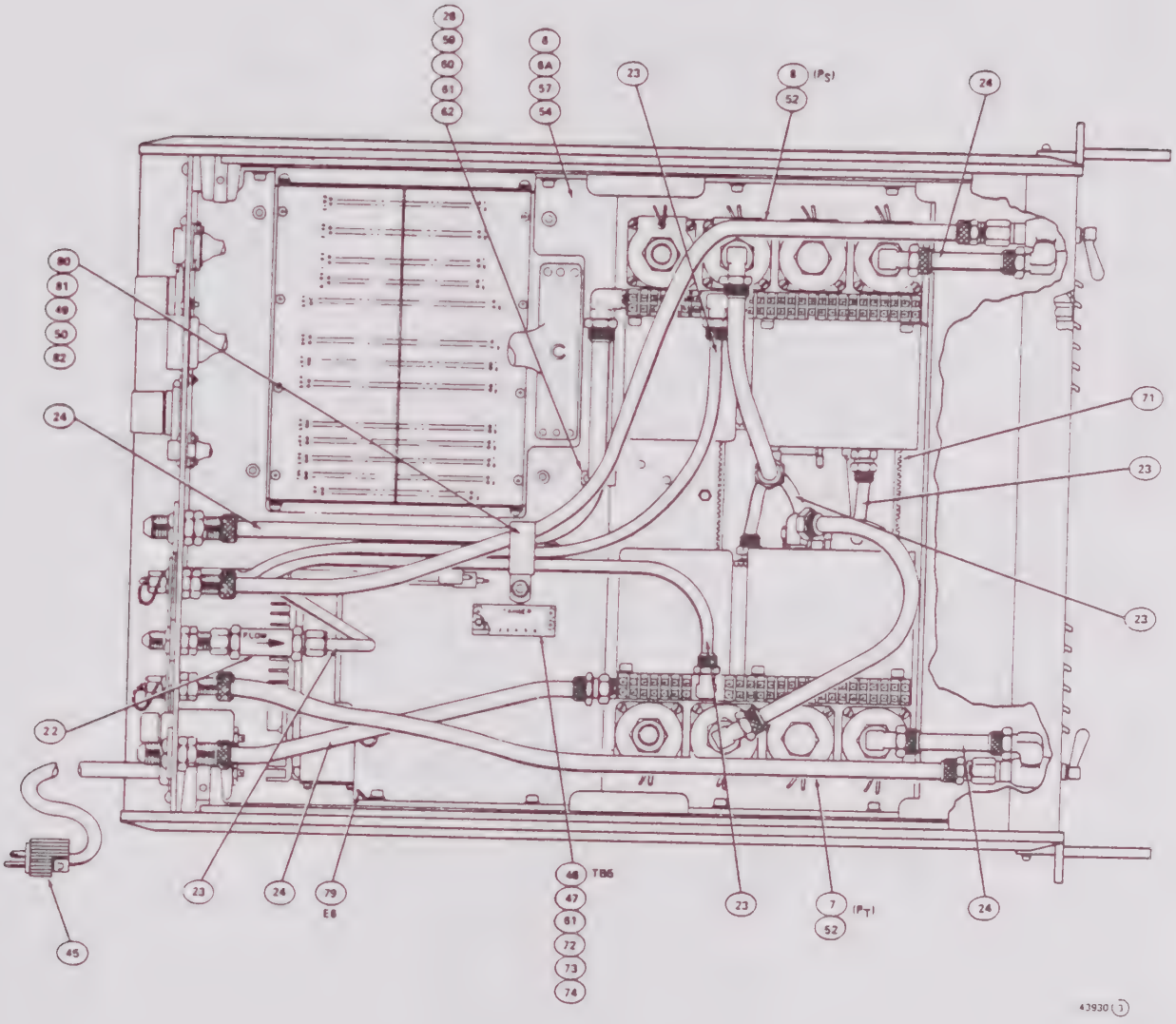

Air Data Tester Assembly
Figure 5-2 (Sheet 3)

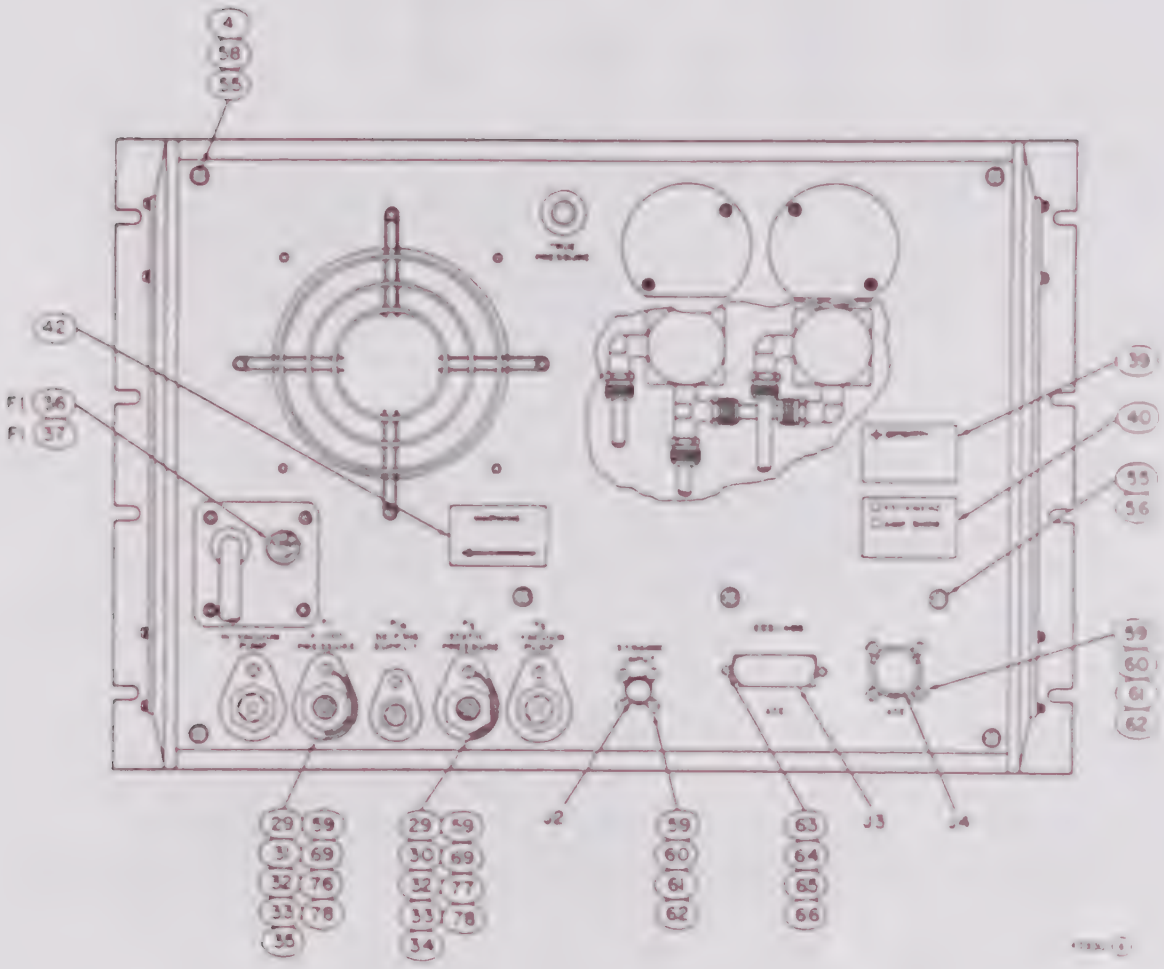

Air Data Tester Assembly
Figure 5-2 (Sheet 4)

FIG. ITEM	PART NUMBER	1234567 NOMENCLATURE	EFF CODE	UNITS PER ASSY
2- 1	4047505-100	TESTER ASSEMBLY,AIR DATA (SEE FIG.1 ITEM 4 FOR NHA)		RF
1A	4022949-902	.ENCLOSURE		1
1B	S832-3C	..NUT,PLAIN,CLINCH STL 8-32 (V46384) (SPN 0405-12)		15
2	4048087-901	.POWER SUPPLY (SEE FIG.11 FOR DETAILS)		1
3	4047693-901	.PANEL ASSEMBLY,FRONT (SEE FIG.3 FOR DETAILS)		1
4	4047694	.PANEL,TEST,REAR (SEE FIG.15 FOR DETAILS)		1
5	4047695	.RACK (SEE FIG.9 FOR DETAILS)		1
6	4047866	.CHASSIS,ELECTRICAL EQUIPMENT SHELF		1
6A	S832-3C	..NUT,PLAIN,CLINCH STL 8-32 (V46384) (SPN 0405-12)		15
7	4047697	.MANIFOLD ASSEMBLY (SEE FIG.7 FOR DETAILS)		1
8	4047698	.MANIFOLD ASSEMBLY (SEE FIG.8 FOR DETAILS)		1
9	4021530-901	.CIRCUIT CARD ASSEMBLY-TIMING CONTROL (SEE FIG.17 FOR DETAILS)		1
10	4021532-901	.CIRCUIT CARD ASSEMBLY-PROGRAM CONTROL (SEE FIG.18 FOR DETAILS)		1
11	4021534-901	.CIRCUIT CARD ASSEMBLY-ARITHMETIC A OR B (SEE FIG.19 FOR DETAILS)		2
12	1900308-901	.CCA-PROGRAM AND SENSOR MEMORY BOARD (SEE FIG.21 FOR DETAILS) (DESIGN CRITICAL ITEM.INCLUDES ITEMS WHICH ARE PART OF 4026197-903 AND 4026197-904)		1
13	4022594-901	.CIRCUIT CARD ASSEMBLY-CONT,D/A AND CTL ADRS (SEE FIG.22 FOR DETAILS)		1
14	4047699-901	.CIRCUIT CARD ASSEMBLY-SCRATCH PAD/CAL MEMORY (SEE FIG.23 FOR DETAILS)		1

- ITEM NOT ILLUSTRATED

FIG. ITEM	PART NUMBER	NOMENCLATURE 1234567	EFF CODE	UNITS PER ASSY
2 15	4023083-901	.CIRCUIT CARD ASSEMBLY- CLOCK/FREQ TO COUNT (SEE FIG.24 FOR DETAILS)		1
15E	4028446-901	INTERFACE OPTION,ASCII (SEE FIG.1 ITEM 2 FOR REQT) (OPTIONAL PART)		RF
15F	4027467-901	CIRCUIT CARD ASSEMBLY- ECA ASCII INTERFACE (SEE FIG.1 ITEM 2A FOR REQT) (SEE FIG.25 FOR DETAILS)		RF
16	4047705-901	.CIRCUIT CARD ASSEMBLY- PT INNER LOOP BOARD (SEE FIG.26 FOR DETAILS)		1
17	4047707-901	.CIRCUIT CARD ASSEMBLY- PS INNER LOOP BOARD (SEE FIG.27 FOR DETAILS)		1
18	4048093	.SHIELD-RFI		2
19	4026197-907	.SENSOR ASSEMBLY- CALIBRATED (DESIGN CRITICAL ITEM.INCLUDES PROMS THAT MUST BE INSTALLED ON MEMORY NO.2 CARD PART NO 1900308-901) (CALIBRATED FOR DRY AIR)		1
19A	4026197-909	.SENSOR ASSEMBLY- CALIBRATED (DESIGN CRITICAL ITEM.INCLUDES PROMS THAT MUST BE INSTALLED ON MEMORY NO.2 CARD PART NO 1900308-901) (CALIBRATED FOR DRY NITROGEN)		1
20	4026197-908	.SENSOR ASSEMBLY- CALIBRATED (DESIGN CRITICAL ITEM.INCLUDES PROMS THAT MUST BE INSTALLED ON MEMORY NO.2 CARD PART NO 1900308-901) (CALIBRATED FOR DRY AIR)		1
20A	4026197-910	.SENSOR ASSEMBLY- CALIBRATED (DESIGN CRITICAL ITEM.INCLUDES PROMS THAT MUST BE INSTALLED ON MEMORY NO.2 CARD PART NO 1900308-901) (CALIBRATED FOR DRY NITROGEN)		1

FIG. ITEM	PART NUMBER	NOMENCLATURE 1234567	EFF CODE	UNITS PER ASSY
2 21	4047868	.PLATE		2
22	B4FT1-7	.FILTER-AIR (V18034) (SPN 4022517) (PRODUCTION CRITICAL)		1
23	B405-170	.INSERT (V02570) (SPN 4013152-1)		10
24	B605-4	.INSERT (V02570) (SPN 4013152-2)		12
25	4025324-1	.CONNECTOR,FEMALE (SEL FR PN B600-7-2KN MADE BY V02570)		2
26	5-8-4-128	.CLAMP,LOOP (V95987) (SPN 2579174-34)		2
- 27	SM1136	.MICROCIRCUIT,DIGITAL (V50364) (SPN 4032646-471) (SEE ILLSTN FIG.21 FOR LCTN)		4
28	4032235	.PLATE,COVER		2
29	S602-61F	.RETAINER,BULKHEAD (V02570) (SPN 4012731-2)		2
30	SS600-61-6ANKN	.UNION,TUBE (V02570) (SPN 4022527-3)		1
31	SS600-61-4ANKN	.UNION,TUBE (V02570) (SPN 4022527-5)		1
32	MS51957-31	.SCREW PNH CRES 6-32X5-8 (SPN 0919-31)		2
33	MS21042L06	.NUT SLFLKG HEX STL 6-32 (SPN 2500929-3)		2
34	SS602-61	.NUT HEX SST 9-16 20 (V02570) (SPN 4022527-7)		1
35	SS402-61	.NUT HEX SST 7-16 20 (V02570) (SPN 4022527-6)		1
36	F02B250V11-2AS	.FUSE,CARTRIDGE (SPN 632367-10) (DESIGN CRITICAL) (FOR USE WITH 230V PWRSPLY ONLY)		1
37	F02B125V3AS	.FUSE,CARTRIDGE (SPN 632367-12) (DESIGN CRITICAL) (FOR USE WITH 115V PWRSPLY ONLY)		1

- ITEM NOT ILLUSTRATED

FIG. ITEM	PART NUMBER	NOMENCLATURE 1234567	EFF CODE	UNITS PER ASSY
2 38	4015724-1	.PLATE,IDENTIFICATION		2
39	4015724-100	.PLATE,IDENTIFICATION		1
40	4023089	.PLATE,INSTRUCTION		1
41	4023099-1	.PLATE,INSTRUCTION CAUTION		1
42	4026264	.PLATE,INSTRUCTION		1
43	4028423-1	.PLATE,INSTRUCTION		3
44	4028423-2	.PLATE,INSTRUCTION N2		3
45	5266C	.CONNECTOR (V71183) (SPN 2504990)		1
46	351-21-06-021	.TERMINAL BOARD (V71785) (SPN 0370-6)		1
47	MS24693C4	.SCREW FLH CRES 4-40X3-8 (SPN 2504188-130)		4
48	MS51958-63	.SCREW PNH CRES 10-32X1-2 (SPN 0919-63)		4
49	MS35338-138	.WASHER,LOCK CRES 0.190 ID (SPN 0164-9)		5
50	MS15795-808	.WASHER,FLAT CRES 0.219 ID (SPN 0770-9)		5
51	MS24693C48	.SCREW,MACHINE FLH CRES 8-32X3-8 (SPN 2504188-274)		6
52	MS24693C272	.SCREW,MACHINE FLH CRES 10-32X1-2 (SPN 2504188-358)		10
53	MS51957-44	.SCREW PNH CRES 8-32X7-16 (SPN 0919-44)		8
54	MS35338-137	.WASHER,LOCK CRES 0.164 ID (SPN 0164-8)		16
55	MS15795-807	.WASHER,FLAT CRES 0.188 ID (SPN 0770-8)		15
56	MS51957-45	.SCREW PNH CRES 8-32X1-2 (SPN 0919-45)		3

FIG. ITEM	PART NUMBER	NOMENCLATURE 1234567	EFF CODE	UNITS PER ASSY
2 57	MS16995-25	.SCREW,CAP SOCKET HEAD CAP SCH CRES 8-32X3-8 (SPN 0819-25)		8
58	MS51957-126	.SCREW,MACHINE PNH CRES 8-32X9-16 (SPN 0919-126)		4
59	MS51957-16	.SCREW PNH CRES 4-40X7-16 (SPN 0919-16)		10
60	MS35338-135	.WASHER,LOCK CRES 0.112 ID (SPN 0164-5)		10
61	MS15795-803	.WASHER,FLAT CRES 0.125 ID (SPN 0770-5)		14
62	MS35649-244	.NUT HEX CRES 4-40 (SPN 0424-8)		10
63	MS51957-7	.SCREW PNH CRES 2-56X1-2 (SPN 0919-7)		2
64	MS35338-134	.WASHER,LOCK CRES 0.086 ID (SPN 0164-3)		2
65	MS15795-802	.WASHER,FLAT CRES 0.094 ID (SPN 0770-3)		2
66	MS35649-224	.NUT HEX CRES 2-56 (SPN 0424-4)		2
67	MS51957-123	.SCREW PNH CRES 6-32X9-16 (SPN 0919-123)		2
68	MS35338-136	.WASHER,LOCK CRES 0.138 ID (SPN 0164-7)		2
69	MS15795-805	.WASHER,FLAT CRES 0.156 ID (SPN 0770-7)		6
70	MS35649-264	.NUT HEX CRES 6-32 (SPN 0424-12)		2
71	G51HCBLACK	.CHANNEL (V03296) (SPN 890744-3)		2

FIG. ITEM	PART NUMBER	NOMENCLATURE 1234567	EFF CODE	UNITS PER ASSY
2 72	2504203-34	.POST		4
73	4048094	.COVER, TERMINAL BOARD		1
74	MS51957-12	.SCREW PNH CRES 4-40X3-16 (SPN 0919-12)		4
75	B600-8-2KN	.ELBOW (V02570) (SPN 4022515-2)		2
76	4013151-901	.CAP MODIFICATION		1
77	4013151-902	.CAP MODIFICATION		1
78	0542-3	.CHAIN		2
79	MS35431-5	.TERMINAL (SPN 092-5) (PRODUCTION CRITICAL)		1
80	MS21919DG16	.CLAMP (SPN 0310-18)		1
81	MS246930-72	.SCREW,MACHINE FLH CRES 10-24-X1-2 (SPN 2504188-328)		1
82	MS35649-204	.NUT,PLAIN HEX CRES 10-24 (SPN 0424-16)		1
83	4038504	.SHIM		4
84	1900312-901	.CIRCUIT CARD ASSEMBLY- CONTROL AND SCRATCHPAD (SEE FIG.20 FOR DETAILS)		1

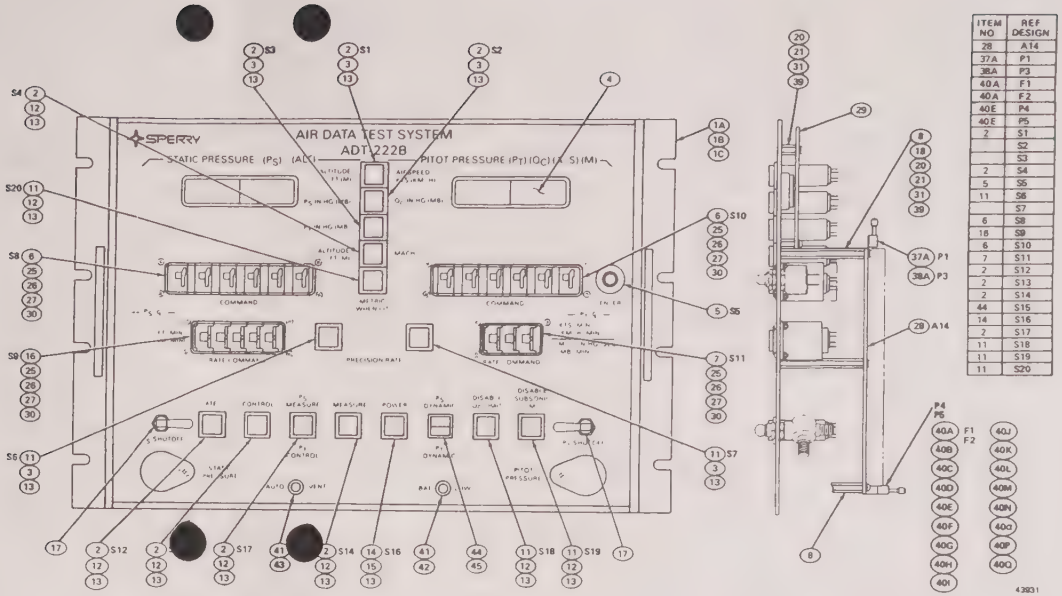

ITEM NO	REF DESIGN
28	A14
37A	P1
38A	P3
40A	F1
40A	F2
40E	P4
40E	P5
2	S1
	S2
	S3
2	S4
5	S5
11	S6
	S7
6	S8
16	S9
6	S10
7	S11
2	S12
2	S13
2	S14
44	S15
14	S16
2	S17
11	S18
11	S19
11	S20

Front Panel Assembly
Figure 5-3

FIG. ITEM	PART NUMBER	NOMENCLATURE 1234567	EFF CODE	UNITS PER ASSY
3- 1	4047693-901	.PANEL ASSEMBLY,FRONT (SEE FIG.2 ITEM 3 FOR NHA)		RF
1A	4047871	.PANEL-FRONT		1
1B	CFHC440-5	..STUD,SELF-LOCKING (V46384) (SPN 2500327-3)		5
1C	CS0S440-6	..POST (V46384) (SPN 2500077-4)		8
2	513-0406-001	.SWITCH,PUSH BUTTON (V72619) (SPN 4014147)		8
3	300-1875	.LENS (V72619) (SPN 4014146-3)		5
4	HACP24X0-030	.FILTER (V47904) (SPN 4012724)		2
5	W101P6	.SWITCH,PUSH (V81640) (SPN 2500745-1)		1
6	28S96	.SWITCH,LEVER (V07126) (SPN 4031699)		2
7	8S766	.SWITCH,ROTARY (V07126) (SPN 4022526-3)		1
8	MS35431-3	.TERMINAL (SPN 092-3)		2
11	513-0606-001	.SWITCH,PUSH BUTTON (V72619) (SPN 4014147-1)		5
12	300-1873	.LENS (V72619) (SPN 4014146-2)		8
13	MS25237-387	.LAMP (SPN 0635-12)		14
14	513-1406-001	.SWITCH,PUSH BUTTON (V72619) (SPN 4014147-2)		1
15	300-1872	.LENS (V72619) (SPN 4014146-1)		1
16	8S760	.SWITCH,ROTARY (V07126) (SPN 4024896)		1
17	1521M2B	.VALVE (V28968) (SPN 4022512)		2
18	2504203-273	.POST		5
20	MS35338-135	.WASHER,LOCK CRES 0.112 ID (SPN 0164-5)		13
21	MS51957-14	.SCREW PNH CRES 4-40X5-16 (SPN 0919-14)		13

- ITEM NOT ILLUSTRATED

FIG. ITEM	PART NUMBER	NOMENCLATURE 1234567	EFF CODE	UNITS PER ASSY
3 25	MS35338-134	.WASHER,LOCK CRES 0.086 ID (SPN 0164-3)		16
26	MS35649-224	.NUT HEX CRES 2-56 (SPN 0424-4)		16
27	MS51957-5	.SCREW PNH CRES 2-56X3-8 (SPN 0919-5)		16
28	4030876-901	.ELECTRONIC COMPONENTS ASSEMBLY-FR PNL MUX (SEE FIG.4 FOR DETAILS)		1
29	4026194-901	.DISPLAY ASSEMBLY (SEE FIG.5 FOR DETAILS)		1
30	MS15795-802	.WASHER,FLAT CRES 0.094 ID (SPN 0770-3)		16
31	NAS620C4L	.WASHER,FLAT CRES 0.115 ID (SPN 2504638-5)		13
- 37	4032194-901	.LEAD ASSEMBLY		1
37A	M55302-62A40M	..CONNECTOR (SPN 4022530-40)		1
- 38	4032194-903	.LEAD ASSEMBLY		1
38A	M55302-62A44M	..CONNECTOR (SPN 4022530-44)		1
39	NO4NYLFLWSHR	.WASHER,FLAT NYL 0.125 ID (V70601) (SPN 2503594-4)		13
- 40	4048985-901	.WIRING HARNESS		1
40A	F028250V2AS	..FUSE (SPN 632367-11)		2
40B	DL1-156P	..CONNECTOR (V71468) (SPN 4046862)		1
40C	DL1-156RW4	..CONNECTOR (V71468) (SPN 4046861)		1
40D	204-0016-000	..LEVER (V71468) (SPN 4018848)		1
40E	MMM26PGDSK	..CONNECTOR (V95238) (SPN 2500320-26)		2
40F	MMM14PGDSK	..CONNECTOR (V95238) (SPN 2500320-14)		1
40G	MMM75PGDSK	..CONNECTOR (V95238) (SPN 2500320-75)		1

- ITEM NOT ILLUSTRATED

FIG. ITEM	PART NUMBER	1234567 NOMENCLATURE	EFF CODE	UNITS PER ASSY
3 40H	M55302-55A54M	..CONNECTOR (SPN 4022521-54)		1
40I	2500P2A22-61	..CONTACT (V95238) (SPN 2500322-1)		156
40J	030-2064-010	..CONTACT (V71468) (SPN 4018847-1)		156
40K	NAS1745-3	..SPLICE (SPN 2503668-2)		2
40L	NAS1745-2	..SPLICE (SPN 2503668-1)		12
40M	31518	..TERMINAL (V00779) (SPN 632523-56)		3
40N	324598	..TERMINAL (V00779) (SPN 632523-33)		14
40O	2500S2A22	..CONTACT (V95238) (SPN 2500323-1)		11
40P	M55302-55A56M	..CONNECTOR (SPN 4022521-56)		1
40Q	HDJA	..FUSE HOLDER (V71400) (SPN 4048047)		2

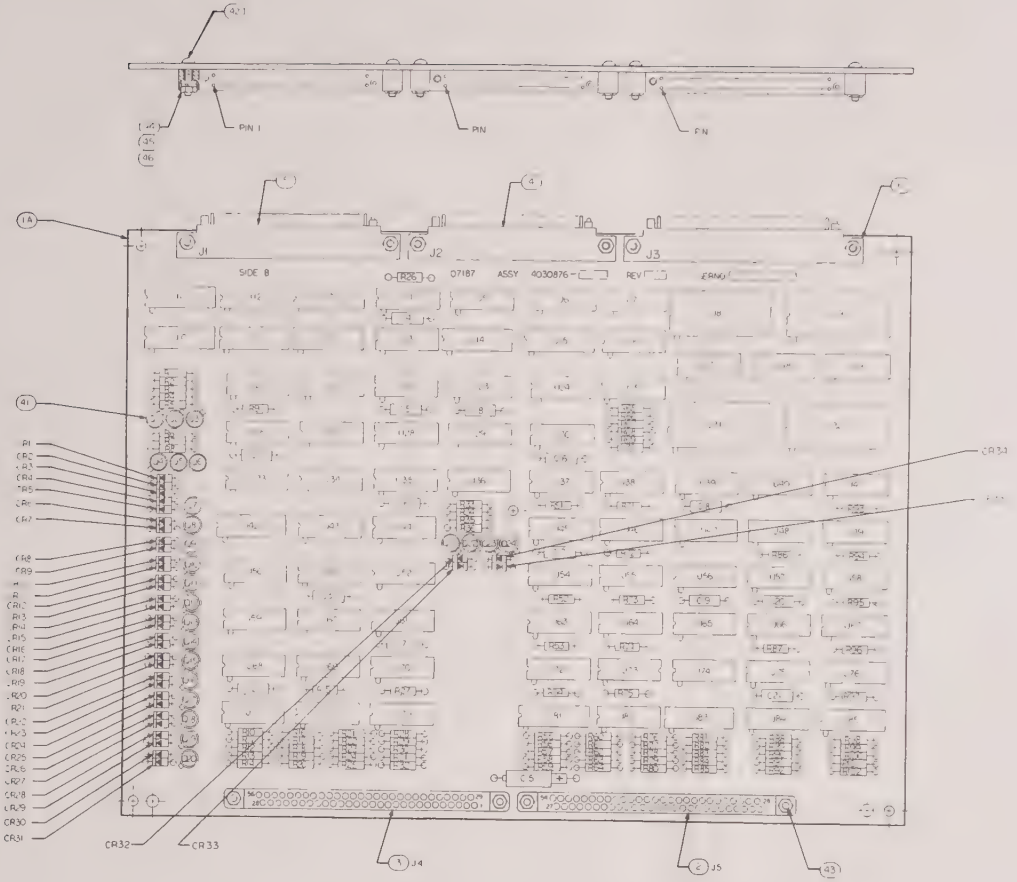

ITEM NO	REF DES
34	U1
38	U2
34	U3
33	U4
30	U5
30	U6
37	U7
39	U8
39	U9
34	U10
38	U11
34	U12
24	U13
36	U14
36	U15
26	U16
37	U17
37	U18
37	U19
30	U20
26	U21
28	U22
26	U23
31	U24
26	U25
30	U26
27	U27
27	U28
26	U29
26	U30
39	U31
39	U32
30	U33
26	U34
26	U35
31	U36
26	U37
29	U38
26	U39
26	U40
27	U41
39	U42
26	U43
26	U44
40	U45
40	U46
31	U47
31	U48
40	U49
26	U50
26	U51
27	U52
31	U54
29	U55
31	U56
29	U57
40	U58
26	U59
27	U60
26	U61
26	U63
26	U64
32	U65
32	U66
32	U67
26	U68
29	U69
26	U70
40	U72
31	U73
26	U74
27	U75
27	U76
29	U77
29	U78
29	U79
26	U81
29	U82

ITEM NO	REF DES
25	U83
26	U84
26	U85
19	R1
18	R2
18	R3
18	R4
18	R5
23	R6
23	R7
23	R8
22	R9
21	R10
21	R11
21	R12
21	R13
21	R14
20	R15
20	R16
20	R17
20	R18
20	R19
20	R20
20	R21
20	R22
20	R23
20	R24
20	R25
22	R26
23	R27
21	R28
21	R29
21	R30
21	R31
21	R32
22	R33
22	R34
22	R35
22	R36
23	R51
23	R52
23	R53
23	R54
21	R55
21	R56
21	R57
21	R58
21	R59
20	R60
20	R61
20	R62
20	R63
20	R64
21	R65
20	R66
23	R67
23	R68
20	R69
21	R70
22	R71
23	R72
23	R73
23	R74
23	R75
20	R76
20	R77
20	R78

ITEM NO	REF DES
20	R79
20	R80
21	R81
21	R82
21	R83
21	R84
21	R85
23	R86
23	R87
23	R88
23	R89
23	R90
23	R91
23	R92
23	R93
20	R94
23	R95
23	R96
21	R97
23	R98
23	R99
23	R100
22	R101
23	R102
8	C1
8	C2
8	C3
8	C4
8	C5
8	C6
8	C7
8	C8
8	C15
8	C16
8	C17
8	C18
8	C19
8	C20
8	C21
11	CR1
11	CR2
11	CR3
10	CR4
10	CR5
10	CR6
10	CR7
10	CR8
10	CR9
10	CR10
10	CR11
10	CR12
10	CR13
10	CR14
10	CR15
10	CR16
10	CR17
10	CR18
10	CR19
10	CR20
10	CR21
10	CR22
10	CR23
10	CR24
10	CR25
10	CR26
10	CR27
10	CR28
10	CR29
10	CR30
10	CR31
10	CR32
10	CR33
10	CR34
10	CR35

ITEM NO	REF DES
5	J1
4	J2
6	J3
3	J4
2	J5
12	Q1
12	Q2
12	Q3
13	Q4
13	Q5
13	Q6
13	Q7
13	Q8
13	Q9
13	Q10
13	Q11
13	Q12
13	Q13
13	Q14
13	Q15
13	Q16
13	Q17
13	Q18
13	Q19
13	Q20
13	Q21
13	Q22
13	Q23
13	Q24

43932

Front Panel Multiplex
Electronic Components Assembly
Figure 5-4

FIG. ITEM	PART NUMBER	NOMENCLATURE 1234567	EFF CODE	UNITS PER ASSY
4- 1	4030876-901	ELECTRONIC COMPONENTS ASSEMBLY-FR PNL MUX (SEE FIG.3 ITEM 28 FOR NHA)		RF
1A	4030877	.PRINTED WIRING BOARD-FRONT PANEL MULTIPLEX		1
2	4022522-54	.CONNECTOR (SEL FR PN WTB54P09J MADE BY V10400)		1
3	4022522-56	.CONNECTOR (SEL FR PN WTB56PD9J MADE BY V10400)		1
4	M55302-61A36	.CONNECTOR (SPN 4022529-36)		1
5	M55302-61A40	.CONNECTOR (SPN 4022529-40)		1
6	M55302-61A44	.CONNECTOR (SPN 4022529-44)		1
8	CK14BR104K	.CAPACITOR,CERAMIC 100,000 UUF ±10% 100 VDCW (SPN 2501629-61)		14
9	CL67BE150MPG	.CAPACITOR,ELECTROLYTIC 15 UF ±20% 15 VDCW (SPN 2503221-17)		1
10	2503517-3	.DIODE (JAN1N4148-1 SPN 2503517-101 MAY BE SUBST)		32
11	2503988-205	.DIODE (1N5618 (V14099) SPN 4025887-203 MAY BE SUBST)		3
12	2N2907A	.TRANSISTOR (V49956) (SPN 2504649-2)		3
13	S18429	.TRANSISTOR (V07263) (SPN 2504651-20)		21
18	RCR07G151JR	.RESISTOR,COMPOSITION 150 OHMS ±5% 1/4 W (SPN 2500932-29)		4
19	RCR07G221JR	.RESISTOR,COMPOSITION 220 OHMS ±5% 1/4 W (SPN 2500932-33)		1
20	RCR07G391JR	.RESISTOR,COMPOSITION 390 OHMS ±5% 1/4 W (SPN 2500932-39)		24

- ITEM NOT ILLUSTRATED

FIG. ITEM	PART NUMBER	NOMENCLATURE 1234567	EFF CODE	UNITS PER ASSY
4 21	RCR07G621JR	.RESISTOR,COMPOSITION 620 OHMS ±5% 1/4 W (SPN 2500932-44)		24
22	RCR07G102JR	.RESISTOR,COMPOSITION 1000 OHMS ±5% 1/4 W (SPN 2500932-49)		1
23	RCR07G222JR	.RESISTOR,COMPOSITION 2200 OHMS ±5% 1/4 W (SPN 2500932-57)		24
24	SD20218	.ELECTRONIC SWITCH (V27014) (SPN 2501402-409)		1
25	4002669-475	.INTEGRATED CIRCUIT (SEL FR PN SN23799J MADE BY V01295)		2
26	SN23805J	.INTEGRATED CIRCUIT (V01295) (SPN 4003165-400)		24
27	SN23806J	.INTEGRATED CIRCUIT (V01295) (SPN 4003165-402)		1
28	SN23807J	.INTEGRATED CIRCUIT (V01295) (SPN 4003165-403)		1
29	SN23808J	.INTEGRATED CIRCUIT (V01295) (SPN 4003165-404)		8
30	SN24336J	.INTEGRATED CIRCUIT (V01295) (SPN 4003165-405)		5
31	SN23809J	.INTEGRATED CIRCUIT (V01295) (SPN 4003165-410)		7
32	4003485-474	.MICROCIRCUIT (SEL FR PN SN33250 MADE BY V01295)		3
33	SN89820J	.MICROCIRCUIT (V01295) (SPN 4004860-451)		1
34	4003515-451	.INTEGRATED CIRCUIT (SEL FR PN SN23803 MADE BY V01295)		4
36	SN54155J	.MICROCIRCUIT (V01295) (SPN 4011701-455)		2
37	314A222	.RESISTOR,NETWORK 2200 OHMS ±2% .1 W (V01121) (SPN 4014785-13)		4
38	316A222	.RESISTOR,NETWORK (V01121) (SPN 4014787-13)		3
39	SN48680J	.MICROCIRCUIT (V01295) (SPN 4017465-450)		4

FIG. ITEM	PART NUMBER	1234567 NOMENCLATURE	EFF CODE	UNITS PER ASSY
4 40	SN5427J	.MICROCIRCUIT (V01295) (SPN 4023702-427)		5
41	10325DAP	.PAD (V07047) (SPN 2500180-1)		24
42	MS51957-15	.SCREW PNH CRES 4-40X3-8 (SPN 0919-15)		6
43	MS51957-17	.SCREW PNH CRES 4-40X1-2 (SPN 0919-17)		4
44	MS35338-135	.WASHER,LOCK CRES 0.112 ID (SPN 0164-5)		4
45	MS15795-803	.WASHER,FLAT CRES 0.125 ID (SPN 0770-5)		4
46	NAS671C4	.NUT HEX CRES 4-40 (SPN 2504359-6)		10

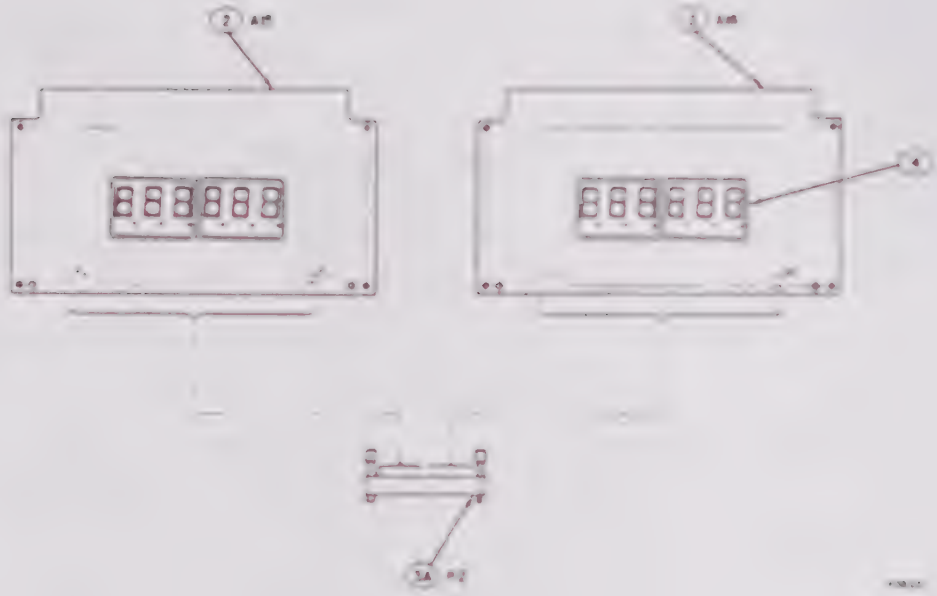

Display Assembly
Figure 5-5

FIG. ITEM	PART NUMBER	NOMENCLATURE 1234567	EFF CODE	UNITS PER ASSY
5- 1	4026194-901	DISPLAY ASSEMBLY (SEE FIG.3 ITEM 29 FOR NHA)		RF
2	4022135-901	.CIRCUIT CARD ASSEMBLY- DISPLAY (SEE FIG.6 FOR DETAILS)		2
- 3	4024935-902	.LEAD ASSEMBLY		1
3A	M5302A36M	..CONNECTOR (V10400) (SPN 4022530-36)		1
R 4	SP353	.DISPLAY PANEL (V73138) (SPN 4022510-353)		4

- ITEM NOT ILLUSTRATED

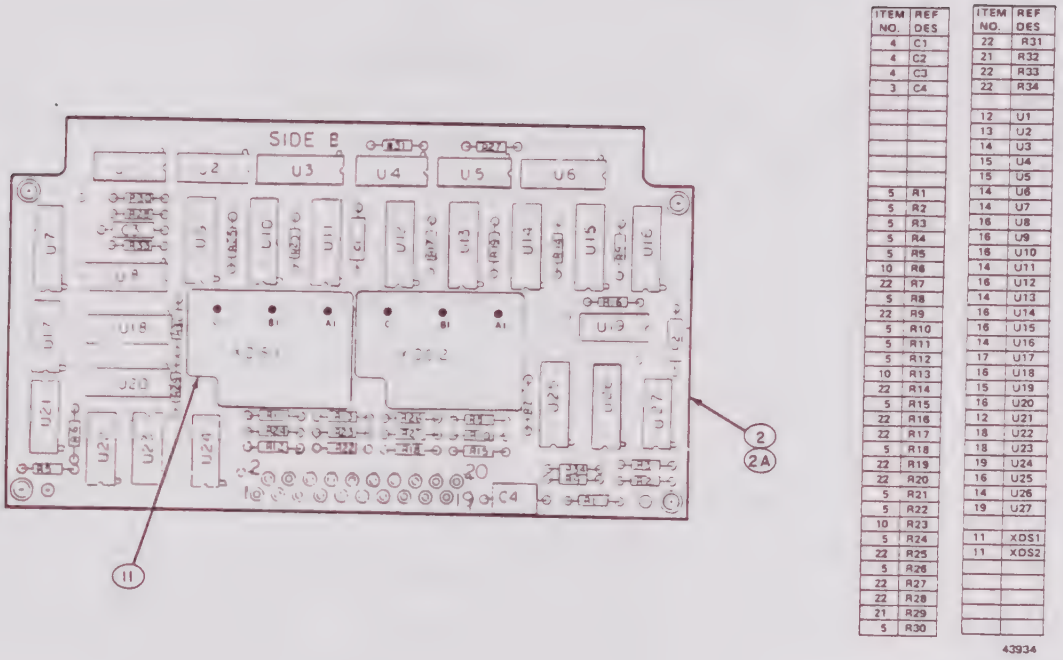

ITEM NO.	REF DES
4	C1
4	C2
4	C3
3	C4
5	R1
5	R2
5	R3
5	R4
5	R5
10	R6
22	R7
5	R8
22	R9
5	R10
5	R11
5	R12
10	R13
22	R14
5	R15
22	R16
22	R17
5	R18
22	R19
22	R20
5	R21
5	R22
10	R23
5	R24
22	R25
5	R26
22	R27
22	R28
21	R29
5	R30

ITEM NO.	REF DES
22	R31
21	R32
22	R33
22	R34
12	U1
13	U2
14	U3
15	U4
15	U5
14	U6
14	U7
16	U8
16	U9
18	U10
14	U11
16	U12
14	U13
16	U14
16	U15
14	U16
17	U17
16	U18
15	U19
16	U20
12	U21
18	U22
18	U23
19	U24
16	U25
14	U26
19	U27
11	XDS1
11	XDS2

Display Circuit Card Assembly
Figure 5-6

FIG. ITEM	PART NUMBER	1234567 NOMENCLATURE	EFF CODE	UNITS PER ASSY
6- 1	4022135-901	CIRCUIT CARD ASSEMBLY- DISPLAY (SEE FIG.5 ITEM 2 FOR NHA)		RF
2	4022136	.PRINTED WIRING BOARD- DISPLAY		1
2A	1006-5	..TERMINAL (V21355) (SPN 2504814-5)		20
3	M7-298-48	.CAPACITOR 0.01 UF ±10% 400 VDCW (V54904) (SPN 2503771-48)		1
4	CK14BR104K	.CAPACITOR,CERAMIC 100,000 UUF ±10% 100 VDCW (SPN 2501629-61)		3
5	RL07S222G	.RESISTOR,FILM 2200 OHMS ±2% 1/4 W (SPN 2504364-57)		16

- ITEM NOT ILLUSTRATED

FIG. ITEM	PART NUMBER	NOMENCLATURE 1234567	EFF CODE	UNITS PER ASSY
6 10	RCR07G102JR	.RESISTOR,COMPOSITION 1000 OHMS ±5% 1/4 W (SPN 2500932-49)		3
11	CS753	.CONNECTOR (V73138) (SPN 4022010)		2
12	SN23805J	.INTEGRATED CIRCUIT (V01295) (SPN 4003165-400)		2
13	SN23810J	.INTEGRATED CIRCUIT (V01295) (SPN 4003165-420)		1
14	4002669-475	.INTEGRATED CIRCUIT (SEL FR PN SN23799J MADE BY V01295)		7
15	SN54H22J	.MICROCIRCUIT (V01295) (SPN 4011573-422)		3
16	4017416-480	.MICROCIRCUIT (SEL FR PN DS8880N MADE BY V27014)		9
17	SN24336J	.INTEGRATED CIRCUIT (V01295) (SPN 4003165-405)		1
18	SN23806J	.INTEGRATED CIRCUIT (V01295) (SPN 4003165-402)		2
19	SN23808J	.INTEGRATED CIRCUIT (V01295) (SPN 4003165-404)		2
21	RL07S243G	.RESISTOR,FILM 24,000 OHMS ±2% 1/4 W (SPN 2504364-82)		2
22	RL07S113G	.RESISTOR,FILM 11,000 OHMS ±2% 1/4 W (SPN 2504364-74)		13

This page was intentionally left blank.

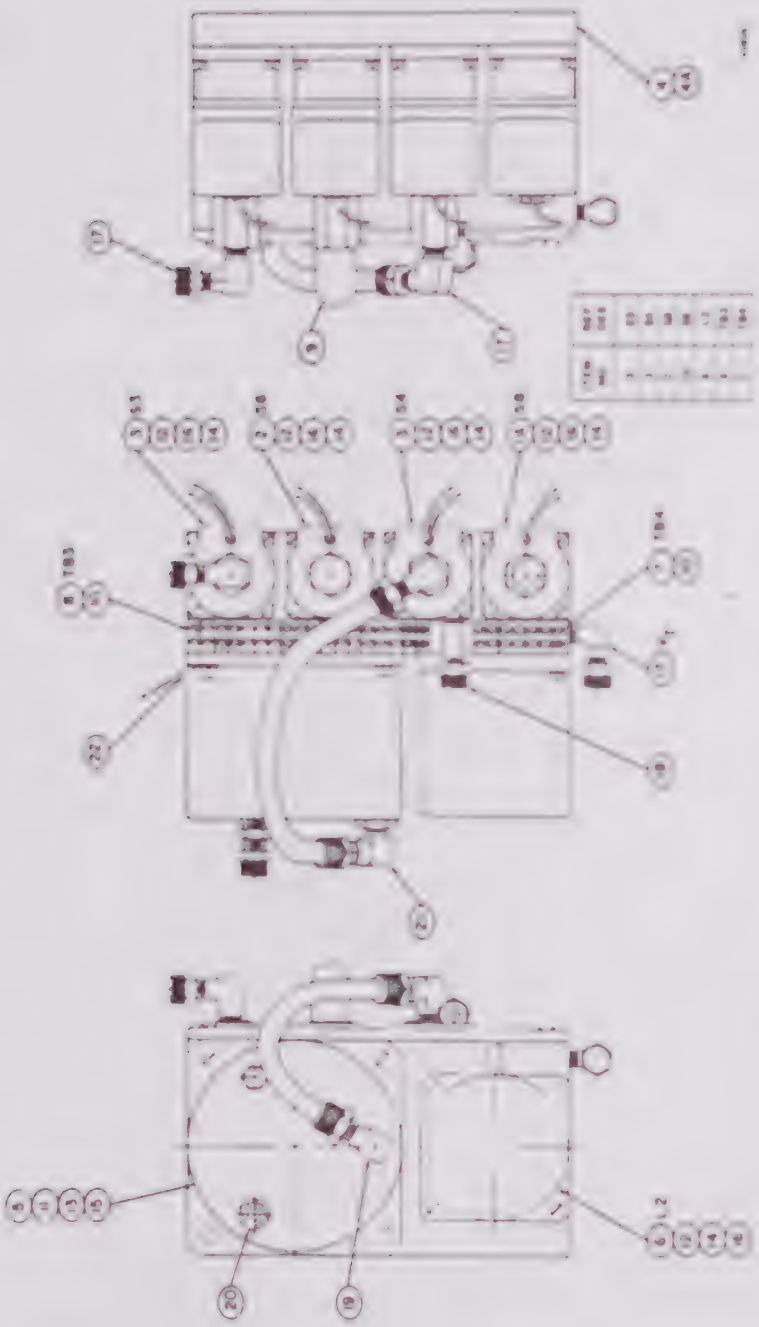

Manifold Assembly
Figure 5-7

FIG. ITEM	PART NUMBER	NOMENCLATURE 1234567	EFF CODE	UNITS PER ASSY
7- 1	4047697	MANIFOLD ASSEMBLY (SEE FIG.2 ITEM 7 FOR NHA)		RF
1A	4046859-201	.VALVE (V97902 PN ESM2011-100-3005A24VDC)		1
2	4046859-301	.VALVE (V97902 PN ESM3011-66-3005-24VDC)		1
3	4046859-801	.VALVE (V97902 PN ESM8012-66-3005-24VDC)		2
4	4047864	.MANIFOLD-PT		1
4A	MS9461-07	..BEARING (SPN 0743-5)		12
5	4047867	.TANK,VOLUME		1
6	100243-1	.VALVE (V53541) (SPN 4034452-1)		1
7	351-21-05-021	.TERMINAL BOARD (V71785) (SPN 0370-5)		1
8	0370-16	.BLOCK		1
9	4046869-12	.SILENCER (V29948 PN 1-8NPTPNUEMATICSILENCER)		1
10	MS51957-16	.SCREW PNH CRES 4-40X7-16 (SPN 0919-16)		8
11	0407-360	.SCREW,FLH SST 10-32X5-8		4
12	0407-278	.SCREW,FLH SST 8-32X5-8		20
13	MS35338-138	.WASHER,LOCK CRES 0.190 ID (SPN 0164-9)		4
14	MS35338-137	.WASHER,LOCK CRES 0.164 ID (SPN 0164-8)		20
15	MS28775-113	.PACKING (SPN 1779231-113)		1
16	324607	.TERMINAL,LUG (V00779) (SPN 632523-34)		13
17	B600-2-2KN	.ELBOW (V02570) (SPN 4022531-2)		3
18	B400-2-2KN	.ELBOW (V02570) (SPN 4022531-1)		1
R 19	B600-2-4KN	.ELBOW,PIPE TO TUBE (V02570) (SPN 4022531-4)		1
20	B400-1-4KN	.UNION,PIPE TO TUBE (V02570) (SPN 4022514-2)		1
21	B605-4	.INSERT (V02570) (SPN 4013152-2)		2
22	31161	.TERMINAL (V00779) (SPN 632523-23)		1

- ITEM NOT ILLUSTRATED

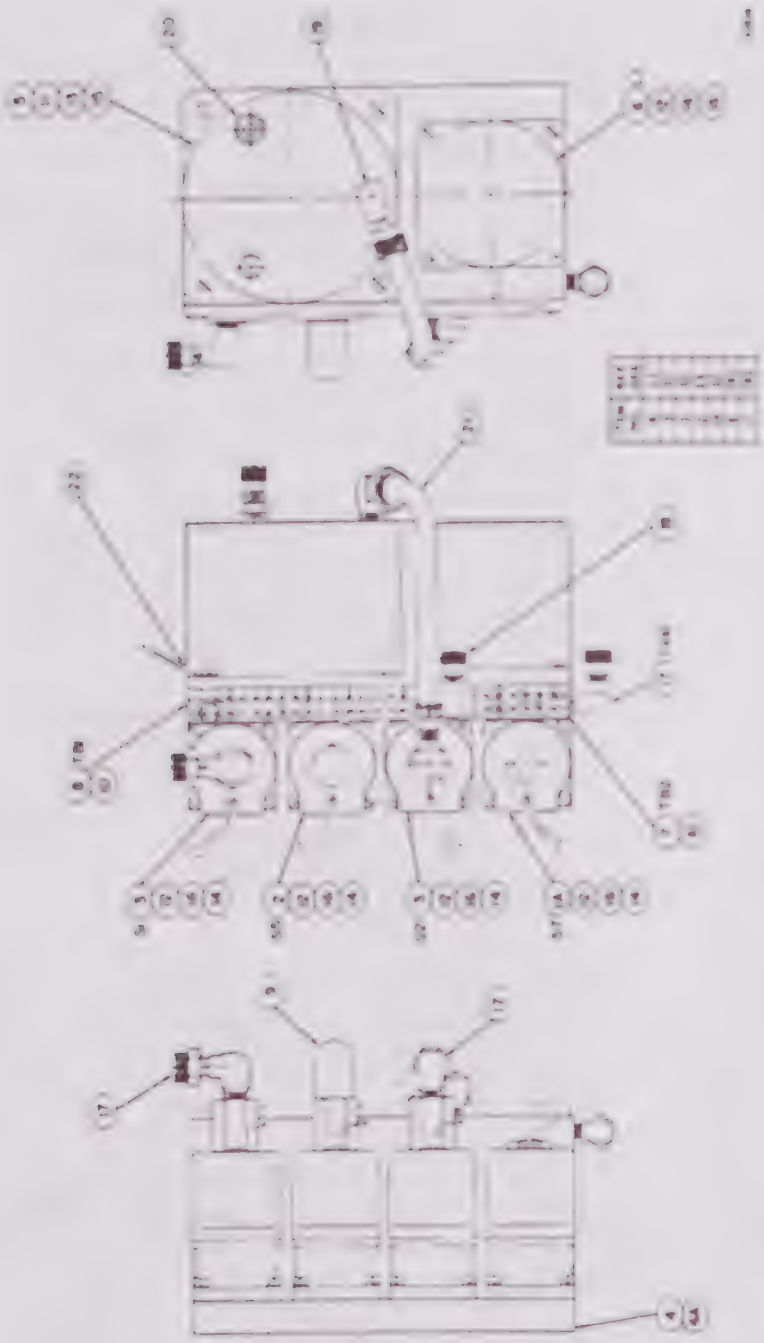

Manifold Assembly
Figure 5-8

FIG. ITEM	PART NUMBER	NOMENCLATURE 1234567	EFF CODE	UNITS PER ASSY
8- 1	4047698	MANIFOLD ASSEMBLY (SEE FIG.2 ITEM 8 FOR NHA)		RF
1A	4046859-201	.VALVE (V97902 PN ESM2011-100-3005A24VDC)		1
2	4046859-301	.VALVE (V97902 PN ESM3011-66-3005-24VDC)		1
3	4046859-801	.VALVE (V97902 PN ESM8012-66-3005-24VDC)		2
4	4047865	.MANIFOLD-PS		1
4A	MS9461-07	..BEARING (SPN 0743-5)		12
5	4047867	.TANK,VOLUME		1
6	100243-2	.VALVE (V53541) (SPN 4034452-2)		1
7	351-21-05-021	.TERMINAL BOARD (V71785) (SPN 0370-5)		1
8	0370-16	.BLOCK		1
9	4046869-12	.SILENCER (V29948 PN 1-8NPTPNUEMATICSILENCER)		1
10	MS51957-16	.SCREW PNH CRES 4-40X7-16 (SPN 0919-16)		8
11	0407-360	.SCREW,FLH SST 10-32X5-8		4
12	0407-278	.SCREW,FLH SST 8-32X5-8		20
13	MS35338-138	.WASHER,LOCK CRES 0.190 ID (SPN 0164-9)		4
14	MS35338-137	.WASHER,LOCK CRES 0.164 ID (SPN 0164-8)		20
15	MS28775-113	.PACKING (SPN 1779231-113)		1
16	324607	.TERMINAL,LUG (V00779) (SPN 632523-34)		13
17	B600-2-2KN	.ELBOW (V02570) (SPN 4022531-2)		3
18	B400-2-2KN	.ELBOW (V02570) (SPN 4022531-1)		1
19	B600-2-4KM	.ELBOW,PIPE TO TUBE (V02570) (SPN 4022531-4)		1
20	B600-2-2KN	.ELBOW (V02570) (SPN 4022531-2)		1
21	B605-4	.INSERT (V02570) (SPN 4013152-2)		2
22	31161	.TERMINAL (V00779) (SPN 632523-23)		1

- ITEM NOT ILLUSTRATED

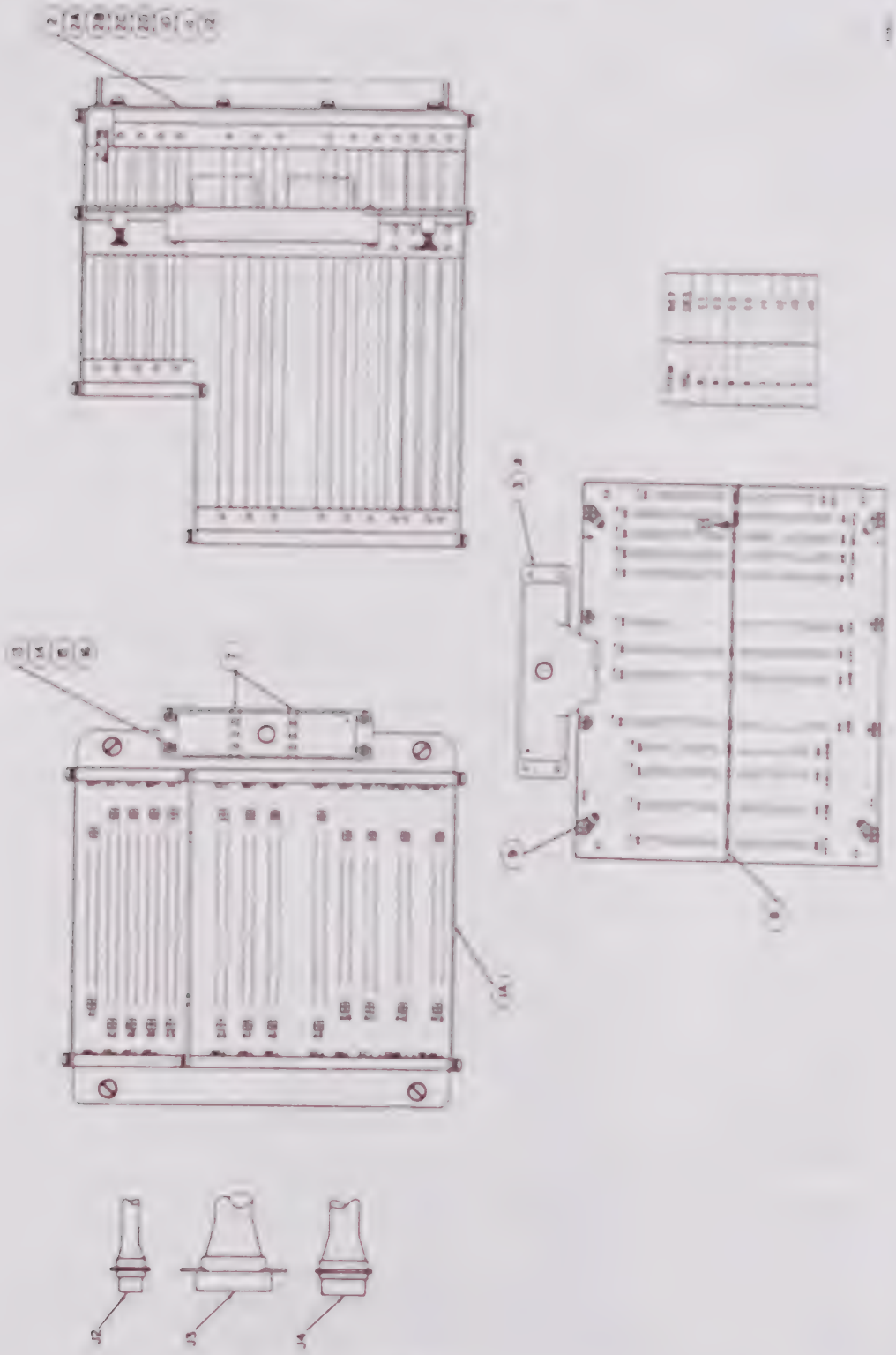

Rack
Figure 5-9

FIG. ITEM	PART NUMBER	1234567 NOMENCLATURE	EFF CODE	UNITS PER ASSY
9- 1	4047695	RACK (SEE FIG.2 ITEM 5 FOR NHA)		RF
1A	4047711	.HOLDER-CARD RACK (SEE FIG.10 FOR DETAILS)		1
2	4047870	.CONTACT ASSEMBLY, ELECTRICAL WIRE WRAP		1
2A	735-0009-000	..CONTACT (V03877) (SPN 4005526-31)		781
2B	735-0010-000	..CONTACT (V03877) (SPN 4005526-32)		193
2C	510527-11	..CONTACT (V16512) (SPN 4007955-3)		26
2D	4005882-3	..CONTACT (V16512 PN 540455-11-591653-01)		64
3	DL1-156RW4	.CONNECTOR,RECEPTACLE, ELECTRICAL (V71468) (SPN 4046861)		1
4	2500970-95	.CONNECTOR,RECEPTACLE, ELECTRICAL (SEL FR PN JTP02RE14-35S MADE BY V77820)		1
5	57-20240-2	.CONNECTOR (V02660) (SPN 4046867-24)		1
6	2500970-1	.CONNECTOR (SEL FR PN JTP02RE8-98S MADE BY V77820)		1
7	B5691-6	.BUS BAR (V29593) (SPN 4014946-6)		2
8	B5805	.BUS BAR (V29593) (SPN 4022508)		1
9	MS35431-3	.TERMINAL (SPN 092-3)		4
10	MS51957-30	.SCREW PNH CRES 6-32X1-2 (SPN 0919-30)		8
11	NAS620C6	.WASHER,FLAT CRES 0.143 ID (SPN 2504638-10)		8
12	MS35338-136	.WASHER,LOCK CRES 0.138 ID (SPN 0164-7)		8
13	MS51957-19	.SCREW PNH CRES 4-40X3-4 (SPN 0919-19)		4

- ITEM NOT ILLUSTRATED

FIG. ITEM	PART NUMBER	1234567 NOMENCLATURE	EFF CODE	UNITS PER ASSY
9 14	MS35338-135	.WASHER,LOCK CRES 0.112 ID (SPN 0164-5)		4
15	MS15795-803	.WASHER,FLAT CRES 0.125 ID (SPN 0770-5)		4
16	MS35649-244	.NUT HEX CRES 4-40 (SPN 0424-8)		4

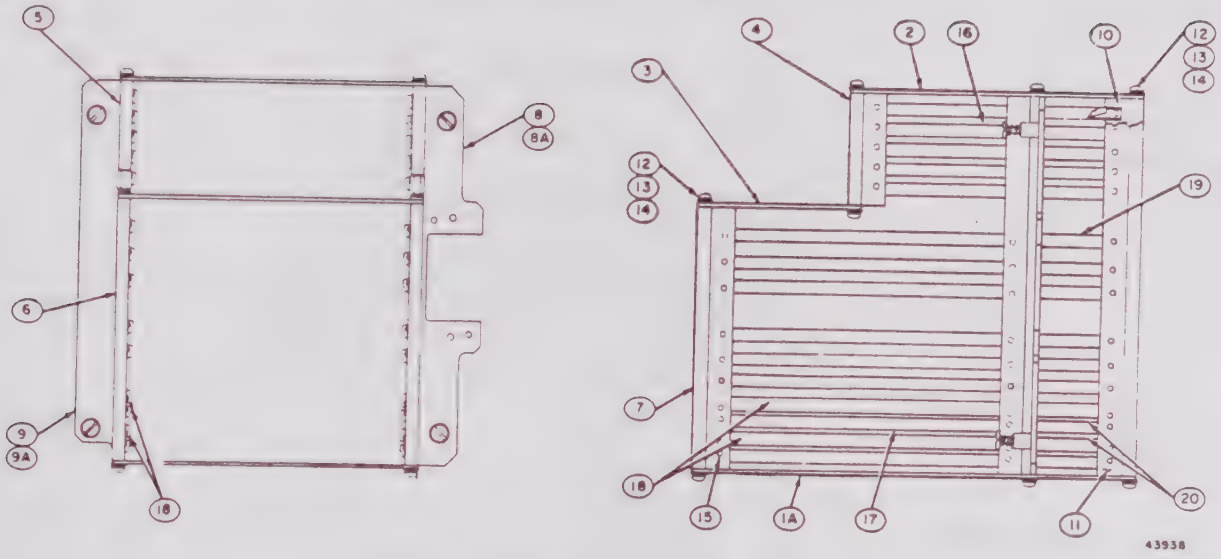

Card Rack Holder
Figure 5-10

FIG. ITEM	PART NUMBER	1234567 NOMENCLATURE	EFF CODE	UNITS PER ASSY
10- 1	4047711	HOLDER-CARD RACK (SEE FIG.9 ITEM 1A FOR NHA)		RF
1A	4022832	.PLATE		1
2	4022831	.PLATE		1
3	4022830	.PLATE		1
4	4022829	.RAIL		1
5	4022828	.RAIL		1
6	4048085	.SUPPORT,ELECTRICAL CARD HOLDER		1
7	4048092	.SUPPORT,ELECTRICAL CARD HOLDER		1
8	4047869	.SUPPORT, ELECTRICAL CARD HOLDER		1
8A	PFC2-832-72	..SCREW,CAPTIVE (V46384) (SPN 4014150)		2
9	4048091	.SUPPORT, ELECTRICAL CARD HOLDER		1
9A	PFC2-832-72	..CREW,CAPTIVE (V46384) (SPN 4014150)		2
10	4048083	.SUPPORT,ELECTRICAL CARD HOLDER		1

- ITEM NOT ILLUSTRATED

FIG. ITEM		PART NUMBER	NOMENCLATURE 1234567	EFF CODE	UNITS PER ASSY
10	11	4048084	.SUPPORT,ELECTRICAL CARD HOLDER		1
	12	MS51957-27	.SCREW PNH CRES 6-32X5-16 (SPN 0919-27)		16
	13	MS35338-136	.WASHER,LOCK CRES 0.138 ID (SPN 0164-7)		16
	14	NAS620C6	.WASHER,FLAT CRES 0.143 ID (SPN 2504638-10)		16
	15	MS16535-22	.RIVET (SPN 0800-117)		100
	16	35-183-10-1	.GUIDE (V18915) (SPN 4014221-50)		10
	17	35-183-11-1	.GUIDE,PRINTED WIRING BOARD (V18915) (SPN 4014221)		16
	18	2501279-55	.GUIDE,PRINTED WIRING BOARD		4
	19	4014221-20	.GUIDE,PRINTED WIRING BOARD		16
	20	2501279-20	.GUIDE, PRINTED WIRING BOARD		4

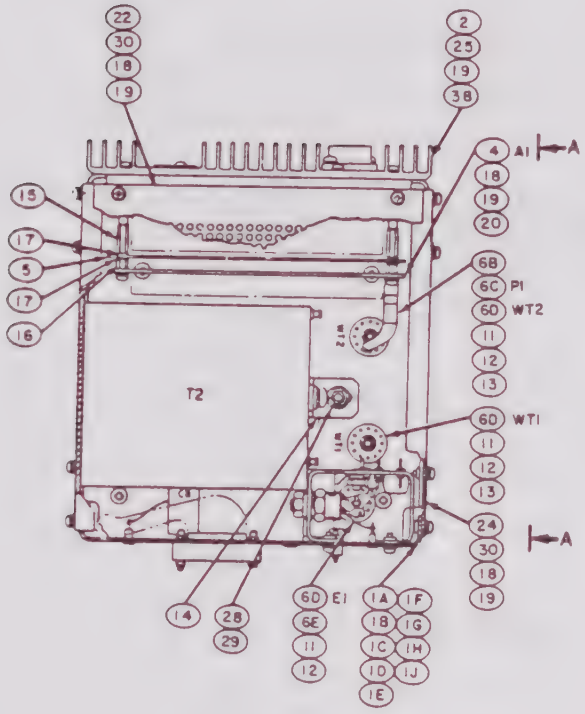

REF NO.	REF DES
9	R1
9	R2
41	R3
41	R4
40	R5
40	R6
10	C1
10	C2
21	C3
4	A1
2	A2
3	A3
6D	E1
6A	J2
6C	P1
7	T1
8	T2
6D	WT1
6D	WT2

43838 (1)

Power Supply
Figure 5-11 (Sheet 1 of 2)

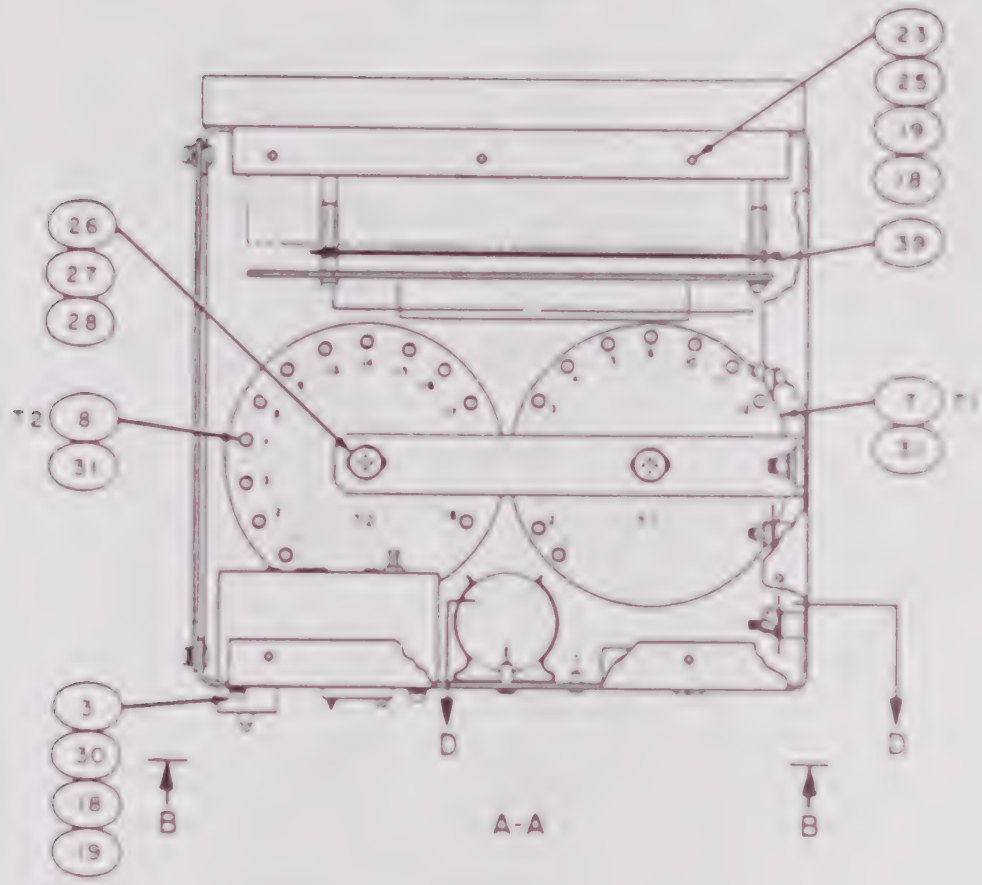

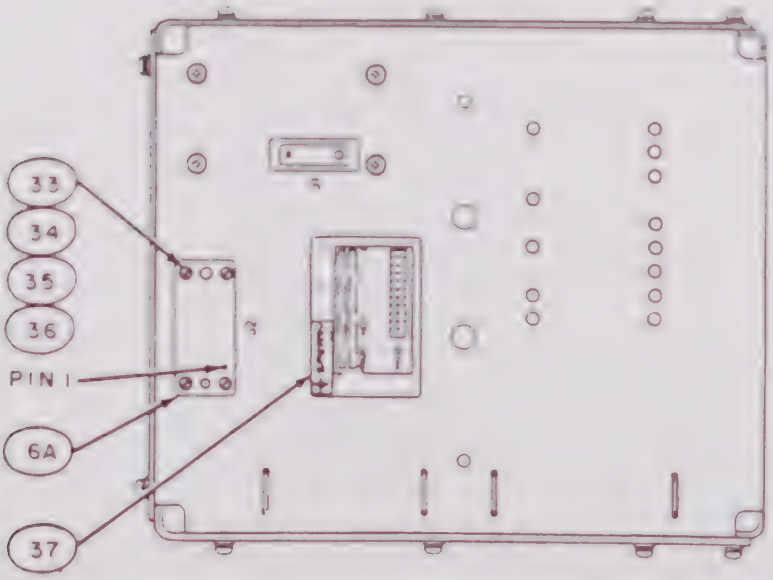

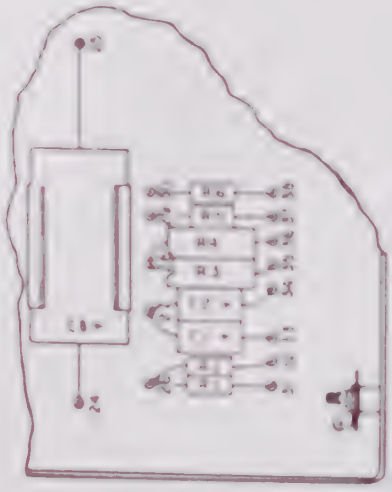

43939 (2)

Power Supply
Figure 5-11 (Sheet 2)

FIG. ITEM	PART NUMBER	NOMENCLATURE 1234567	EFF CODE	UNITS PER ASSY
11- 1	4048087-901	POWER SUPPLY (SEE FIG.2 ITEM 2 FOR NHA)		RF
1A	4048088	.CHASSIS, ELECTRICAL EQUIPMENT-POWER SUPPLY		1
1B	M45938-1-5	..NUT CLINCH STL 4-40 (SPN 0405-5)		22
1C	FHS632-12	..STUD (V46384) (SPN 2504345-212)		3
1D	BSOS440-30	..POST (V46384) (SPN 2504931-8)		4
1E	M45938-1-16	..NUT STL 10-32 (SPN 0405-20)		4
1F	M24066-2-146	..CLIP (SPN 336253-46)		1
1G	MS20470AD5-5	..RIVET UNIV HD AL ALY 5-32X5-16 (SPN 0674-325)		2
1H	FHS032-8	..STUD (V46384) (SPN 2504345-58)		1
1J	014-1004-000319	..TERMINAL,STUD (V98291) (SPN 2503521-8)		15
2	4048089-901	.ELECTRONIC COMPONENTS ASSEMBLY-HEAT SINK (SEE FIG.12 FOR DETAILS)		1
3	4030927	.ELECTRONIC COMPONENTS ASSEMBLY-TR (SEE FIG.13 FOR DETAILS)		1
4	4047701-901	.CIRCUIT CARD ASSEMBLY-POWER SUPPLY (SEE FIG.14 FOR DETAILS)		1
5	4048086	.SHIELD-RFI,POWER SUPPLY		1
- 6	4048986-901	.WIRING HARNESS,BRANCHED		1
6A	MMM75SGDS	..CONNECTOR (V95238) (SPN 2500311-75)		1
6B	2500S2A22	..CONTACT (V95238) (SPN 2500323-1)		75
6C	M55302-55A70M	..CONNECTOR (SPN 4022521-70)		1
6D	SE26XF01	..STUD (SPN 2503632)		3
6E	MS35431-3	..TERMINAL (SPN 092-3)		1

- ITEM NOT ILLUSTRATED

FIG. ITEM		PART NUMBER	NOMENCLATURE 1234567	EFF CODE	UNITS PER ASSY
11	7	H314	.TRANSFORMER (V09798) (SPN 4030913-1)		1
	8	H654	.TRANSFORMER (V09798) (SPN 4030913-3)		1
	9	RW69V330	.RESISTOR,WIREWOUND 33 OHMS ±5% 3 W (SPN 337708-61)		2
	10	CL67BL560MPG	.CAPACITOR,ELECTROLYTIC 56 UF ±20% 75 VDCW (SPN 4026910-50)		2
	11	MS21042L06	.NUT SLFLKG HEX STL 6-32 (SPN 2500929-3)		3
	12	MS15795-805	.WASHER,FLAT CRES 0.156 ID (SPN 0770-7)		3
	13	2678-17063N140	.SPACER (V06540) (SPN 2578829-13)		4
	14	4031672	.BRACKET		1
	15	9728SS0440-7	.POST (V06540) (SPN 2500394-8)		4
	16	9723SS0440-7	.POST (V06540) (SPN 2500394-12)		4
	17	NAS620C4	.WASHER,FLAT CRES 0.115 ID (SPN 2504638-6)		8
	18	MS15795-803	.WASHER,FLAT CRES 0.125 ID (SPN 0770-5)		28
	19	MS35338-135	.WASHER,LOCK CRES 0.112 ID (SPN 0164-5)		28
	20	MS51957-13	.SCREW PNH CRES 4-40X1-4 (SPN 0919-13)		4
	21	TVA1318-5	.CAPACITOR,ELECTROLYTIC 4000 UF +150% -10% 50 VDCW (V56289) (SPN 724057-7)		1
	22	4031669	.COVER,TOP		1
	23	4031670	.PLATE		1
	24	4031671	.PLATE		1
	25	MS51957-15	.SCREW PNH CRES 4-40X3-8 (SPN 0919-15)		18

FIG. ITEM	PART NUMBER	NOMENCLATURE 1234567	EFF CODE	UNITS PER ASSY
11 26	MS51958-62	.SCREW PNH CRES 10-32X7-16 (SPN 0919-62)		2
27	MS35338-138	.WASHER,LOCK CRES 0.190 ID (SPN 0164-9)		2
28	MS15795-808	.WASHER,FLAT CRES 0.219 ID (SPN 0770-9)		3
29	MS21042L3	.NUT SLFLKG HEX STL 10-32 (SPN 2500929-5)		1
30	MS51957-14	.SCREW PNH CRES 4-40X5-16 (SPN 0919-14)		8
31	2504188-355	.SCREW FLH CRES 10-32X11-32		2
33	0407-66	.SCREW FILH SST 2-56X3-8		4
34	NAS620C2	.WASHER,FLAT CRES 0.089 ID (SPN 2504638-2)		4
35	MS35338-134	.WASHER,LOCK CRES 0.086 ID (SPN 0164-3)		4
36	MS35649-224	.NUT HEX CRES 2-56 (SPN 0424-4)		4
37	4015724-100	.PLATE,IDENTIFICATION		1
38	1605-00	.WASHER,LOCK CRES 0.136 ID (V78189) (SPN 824636-2)		10
39	332773	.CHANNEL		AR
40	RW69V301	.RESISTOR,WIREWOUND 300 OHMS ±5% 3 W (SPN 337708-84)		2
41	RW67V560	.RESISTOR,WIREWOUND 56 OHMS (SPN 337457-67)		2

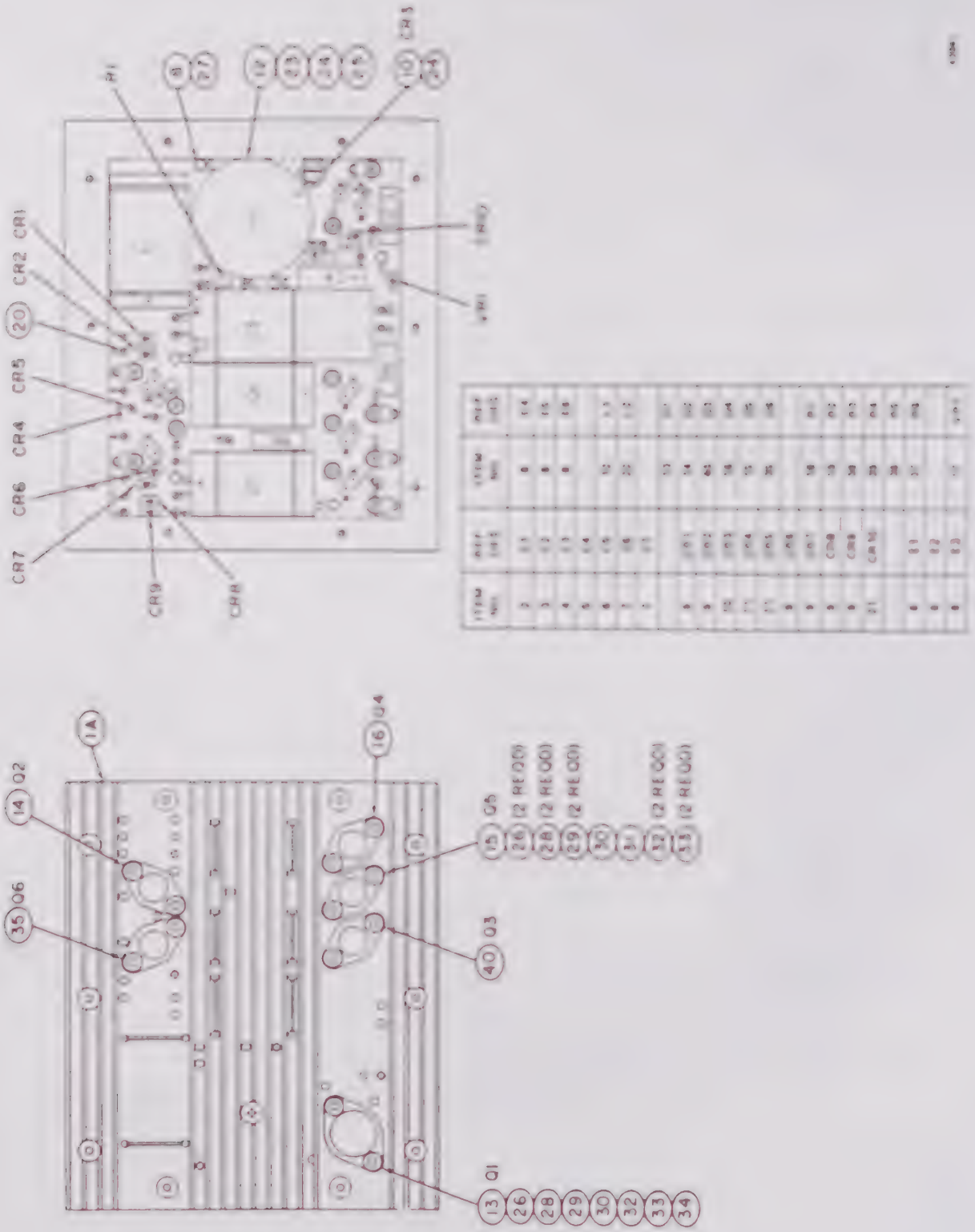

Heat Sink Electronic Components Assembly
Figure 5-12

	FIG. ITEM	PART NUMBER	NOMENCLATURE 1234567	EFF CODE	UNITS PER ASSY
12-	1	4048089-901	ELECTRONIC COMPONENTS ASSEMBLY-HEAT SINK (SEE FIG.11 ITEM 2 FOR NHA)		RF
	1A	4048090	.HEAT SINK		1
	2	TVA1319-9	.CAPACITOR,ELECTROLYTIC 2000 UF +100% -10% 75 VDCW (V56289) (SPN 724057-8)		1
	3	CL67BN220MPG	.CAPACITOR,ELECTROLYTIC 22 UF ±20% 100 VDCW (SPN 4026910-54)		1
	4	CK15BR154K	.CAPACITOR,CERAMIC 150,000 UUF ±10% 100 VDCW (SPN 2501629-69)		1
	5	CL67BE271MPG	.CAPACITOR,ELECTROLYTIC 270 UF ±20% 15 VDCW (SPN 4026910-22)		1
	6	TVA1578	.CAPACITOR,ELECTROLYTIC 200 UF ±50% -10% 300 VDCW (V56289) (SPN 4030915-1)		1
R	7	43D202G050KL1	.CAPACITOR,ELECTROLYTIC 2000 UF ±150% -10% 50 VDCW (V56289) (SPN 724057-9)		2
	8	MS17172-8	.TERMINAL (SPN 4019564-8)		6
	9	1N5550	.DIODE (V14099) (SPN 4009286-201)		6
	10	UTG1533	.DIODE (V12969) (SPN 4029639-251)		1
	11	1N5618	.DIODE (V14099) (SPN 4025887-203)		2
	12	H321-1	.INDUCTOR 0.7 MH (V09798) (SPN 4030914)		1
	13	2N6274	.TRANSISTOR (V04713) (SPN 4022894-200)		1
	14	2N3739	.TRANSISTOR (V04713) (SPN 4021504-2)		1
	15	2N6315	.TRANSISTOR (V04713) (SPN 4012597-21)		1
	16	2N6300	.TRANSISTOR (V04713) (SPN 4046860-298)		1
	17	UZ6110	.DIODE (V12969) (SPN 2504909-201)		1

- ITEM NOT ILLUSTRATED

FIG. ITEM		PART NUMBER	NOMENCLATURE 1234567	EFF CODE	UNITS PER ASSY
12	18	RW81UR120F	.RESISTOR,WIREWOUND 0.12 OHMS ±1% 1 W (SPN 2501300-3)		1
	19	RCR20G471JR	.RESISTOR,COMPOSITION 470 OHMS ±5% 1/2 W (SPN 2500931-41)		1
	20	013-1002-000319	.TERMINAL (V98291) (SPN 872053-11)		22
	21	JAN1N4148-1	.DIODE (SPN 2503517-101)		1
	22	MS75089-20	.COIL (SPN 2504709-46)		1
	23	MS51958-62	.SCREW PNH CRES 10-32X7-16 (SPN 0919-62)		1
	24	MS35338-138	.WASHER,LOCK CRES 0.190 ID (SPN 0164-9)		2
	25	NAS620C10L	.WASHER,FLAT CRES 0.195 ID (SPN 2504638-13)		1
	26	MS51957-31	.SCREW PNH CRES 6-32X5-8 (SPN 0919-31)		12
	27	MS35338-135	.WASHER,LOCK CRES 0.112 ID (SPN 0164-5)		6
	28	MS35338-136	.WASHER,LOCK CRES 0.138 ID (SPN 0164-7)		12
	29	MS15795-805	.WASHER,FLAT CRES 0.156 ID (SPN 0770-7)		12
	30	MS35431-3	.TERMINAL (SPN 092-3)		6
	31	43-66-2	.INSULATOR (V13103) (SPN 2500415-662)		6
	32	MS35649-264	.NUT HEX CRES 6-32 (SPN 0424-12)		12
	33	2678-17063N140	.SPACER (V06540) (SPN 2578829-13)		12
	34	43-03-2	.INSULATOR (V13103) (SPN 2500415-32)		1

FIG. ITEM		PART NUMBER	NOMENCLATURE 1234567	EFF CODE	UNITS PER ASSY
12	35	2N6316	.TRANSISTOR 2N6318 (V04713) (SPN 4012597-22)		1
	36	RWR84S2R61FR	.RESISTOR,WIREWOUND 2.61 OHMS ±1% 7 W (SPN 4005805-137)		1
	37	RWR84S2R74FR	.RESISTOR,WIREWOUND 2.74 OHMS ±1% 7 W (SPN 4005805-139)		1
	38	RCR32G913JR	.RESISTOR,COMPOSITION 91,000 OHMS ±5% 1 W (SPN 2500930-96)		1
	39	RCR20G751JR	.RESISTOR,COMPOSITION 750 OHMS ±5% 1/2 W (SPN 2500931-46)		1
	40	2N6298	.TRANSISTOR (V04713) (SPN 4046860-200)		1

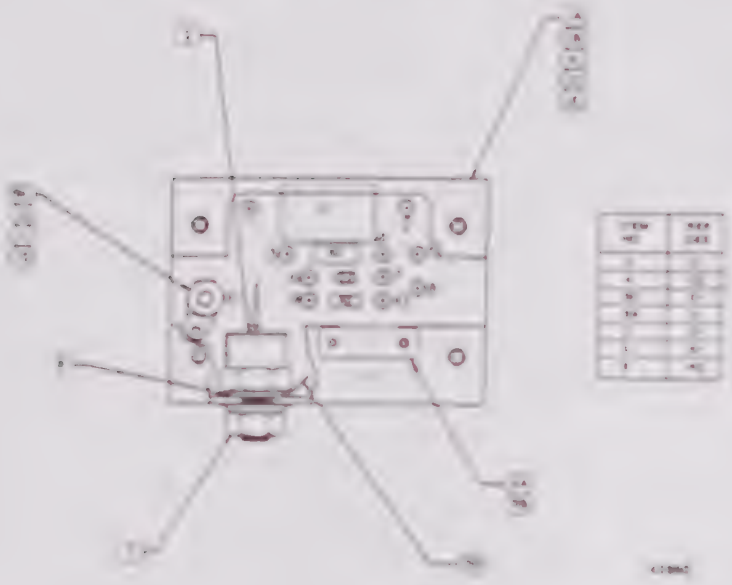

TR Electronic Components Assembly
Figure 5-13

FIG. ITEM	PART NUMBER	NOMENCLATURE 1234567	EFF CODE	UNITS PER ASSY
13- 1	4030927	ELECTRONIC COMPONENTS ASSEMBLY-TR (SEE FIG.11 ITEM 3 FOR NHA)		RF
1A	4031673	.CHASSIS,TRIAC		1
1B	014-1001-000319	..TERMINAL (V98291) (SPN 2503521-1)		7
1C	M45938-1-3	..NUT, CLINCH STL 4-40 (SPN 0405-25)		4
1D	FHS632-6	..STUD (V46384) (SPN 2504345-26)		1
1E	011-1015-000319	..TERMINAL,FEEDTHRU (V98291) (SPN 1752806-10)		3
2	T41150	.SEMICONDUCTOR DEVICE CONTROLLED RECTIFIER (V02735) (SPN 4025750-201)		1
3	M7-298-99	.CAPACITOR,PLASTIC 0.27 UF ±10% 200 VDCW (V54904) (SPN 2503771-99)		1

- ITEM NOT ILLUSTRATED

FIG. ITEM		PART NUMBER	NOMENCLATURE 1234567	EFF CODE	UNITS PER ASSY
13	4	CK12BX102K	.CAPACITOR,CERAMIC 1000 UUF ±10% 100 VDCW (SPN 2501629-25)		1
	5	RCR20G101JR	.RESISTOR,COMPOSITION 100 OHMS ±5% 1/2 W (SPN 2500931-25)		1
	6	RCR07G102JR	.RESISTOR,COMPOSITION 1000 OHMS ±5% 1/4 W (SPN 2500932-49)		1
	7	4840	.HARDWARE KIT (V13103) (SPN 4008784-61)		1
	8	NAS620C416L	.WASHER,FLAT CRES 0.255 ID (SPN 2504638-15)		1
-	9	4032047	.LEAD ASSEMBLY		1
	9A	MMM14SGDS	..CONNECTOR (V95238) (SPN 2500311-14) (PRODUCTION CRITICAL)		1
	9B	2500P2A22-61	..CONTACT (V95238) (SPN 2500322-1)		13
	9C	MS35431-3	..TERMINAL (SPN 092-3)		1
	9D	29-250	..TERMINAL (V79963) (SPN 092-9)		1
	10	MS15795-805	.WASHER,FLAT CRES 0.156 ID (SPN 0770-7)		1
	11	MS35338-136	.WASHER,LOCK CRES 0.138 ID (SPN 0164-7)		1
	12	MS35649-264	.NUT HEX CRES 6-32 (SPN 0424-12)		1

- ITEM NOT ILLUSTRATED

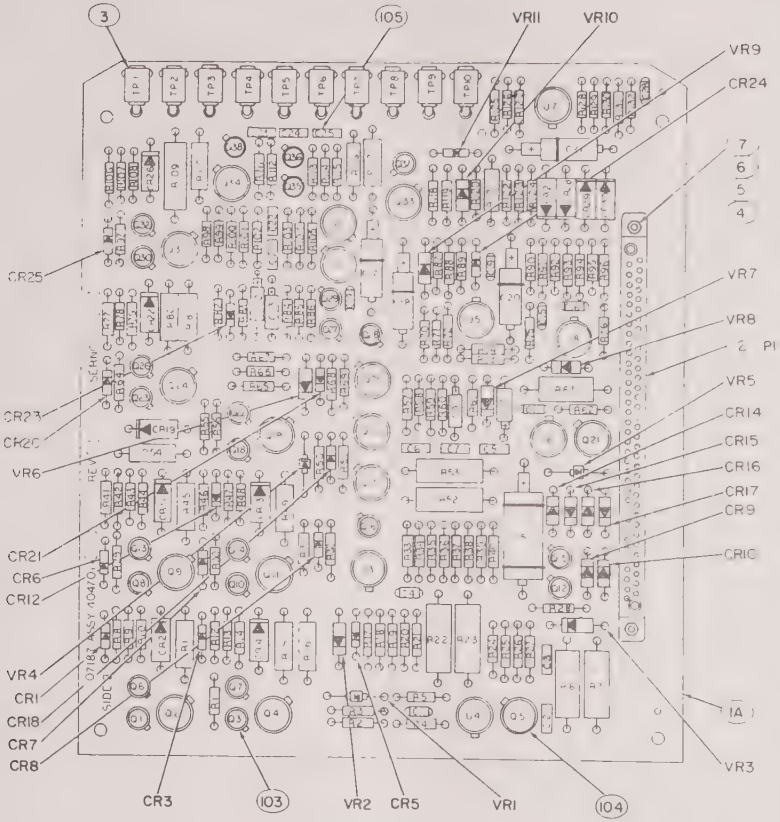

ITEM NO.	REF DES
11	C1
15	C2
15	C3
10	C4
8	C5
15	C6
15	C7
12	C8
9	C9
9	C10
10	C11
9	C12
9	C13
10	C14
10	C15
10	C16
16	C17
17	C18
10	C19
16	C20
14	C21
15	C22
15	C23
15	C24
13	C25
17	C27
29	CR1
31	CR2
29	CR3
31	CR4
29	CR5
29	CR6
29	CR7
29	CR8
30	CR9
30	CR10
31	CR11
29	CR12
29	CR13
30	CR14
30	CR15
30	CR16
30	CR17
29	CR18
31	CR19
29	CR20
29	CR21
31	CR22
29	CR23
29	CR24
29	CR25
31	CR26
31	CR27
31	CR28
31	CR29
31	CR30
2	P1
23	Q1
22	Q2
23	Q3
22	Q4
27	Q5
24	Q6
24	Q7
23	Q8
22	Q9
23	Q10
22	Q11
23	Q12
24	Q13
24	Q14
23	Q15
23	Q16
27	Q17
23	Q18
22	Q19
28	Q20
20	Q21
24	Q22
23	Q23
22	Q24
27	Q25
24	Q26
23	Q27
23	Q28
23	Q29
23	Q30
22	Q31
24	Q32
25	Q33
28	Q34
26	Q35
21	Q36
21	Q37
23	Q38
87	R1
102	R2
55	R3
85	R4
84	R5
75	R6
75	R7
87	R8
81	R9
87	R10
96	R11
87	R12
81	R13
48	R14
96	R15
78	R16
102	R17
66	R18
70	R19
55	R20
56	R21
74	R22
74	R23
93	R24
52	R25
42	R26
43	R27
68	R28
48	R29
87	R30
90	R31
42	R32
55	R33
64	R34
55	R35
54	R36
102	R37
44	R38
45	R39
47	R40
50	R41
48	R42
81	R43
50	R44
96	R45
48	R46
81	R47
87	R48
96	R49
46	R50
49	R51
71	R52
72	R53
96	R54
81	R55
81	R56
102	R57
85	R58
61	R59
69	R60
91	R61
92	R62
95	R63
50	R64
48	R65
85	R66
87	R67
63	R68
94	R69
98	R70
85	R71
65	R72
51	R73
61	R74
65	R75
82	R76
48	R77
81	R78
50	R79
96	R80
96	R81
88	R82
88	R83
82	R84
86	R85
85	R86
79	R87
50	R88
83	R89
79	R90
67	R91
86	R92
102	R93
60	R94
86	R95
59	R96
87	R97
85	R98
86	R99
57	R100
65	R101
61	R102
62	R103
65	R104
65	R105
48	R106
81	R107
87	R108
73	R109
77	R110
61	R111
64	R112
97	R113
98	R114
80	R115
100	R116
76	R117
47	R118
47	R119
89	R120
101	R121
102	R122
58	R123
47	R124
53	R125
85	R126
51	R127
85	R128
85	R129
95	R130
47	R131
85	R132
18	U1
18	U2
19	U3
19	U4
18	U5
19	U6
19	U7
19	U8
32	VR1
38	VR2
35	VR3
33	VR4
34	VR5
37	VR6
40	VR7
39	VR8
36	VR9
36	VR10
41	VR11

43942

Power Supply Circuit Card Assembly
Figure 5-14

FIG. ITEM		PART NUMBER	NOMENCLATURE 1234567	EFF CODE	UNITS PER ASSY
14-	1	4047701-901	CIRCUIT CARD ASSEMBLY- POWER SUPPLY (SEE FIG.11 ITEM 4 FOR NHA)		RF
	1A	4047702	.PRINTED WIRING BOARD- POWER SUPPLY		1
	2	4022522-70	.CONNECTOR (SEL FR PN WTB70PD9J MADE BY V10400)		1
	3	026-4005-000342	.JACK (V98291) (SPN 4018679-2)		10
	4	MS51957-17	.SCREW PNH CRES 4-40X1-2 (SPN 0919-17)		2
	5	MS35338-135	.WASHER,LOCK CRES 0.112 ID (SPN 0164-5)		2
	6	MS15795-803	.WASHER,FLAT CRES 0.125 ID (SPN 0770-5)		2
	7	NAS671C4	.NUT HEX CRES 4-40 (SPN 2504359-6)		1
	8	137D566X9075T2	.CAPACITOR,ELECTROLYTIC 56 UF ±10% 75 VDCW (V56289) (SPN 2503169-50)		1
	9	M39003-01-2356	.CAPACITOR,ELECTROLYTIC 1 UF ±10% 50 VDCW (SPN 2503220-1)		4
	10	M39014-01-1313	.CAPACITOR,CERAMIC 560 UUF ±10% 200 VDCW (SPN 4006200-14)		6
	11	M39014-01-1317	.CAPACITOR,CERAMIC 1000 UUF ±10% 200 VDCW (SPN 4006200-17)		2
	12	M39014-02-1292	.CAPACITOR,CERAMIC 4700 UUF ±10% 200 VDCW (SPN 4006200-25)		1
	13	M39014-02-1298	.CAPACITOR,CERAMIC 10,000 UUF ±10% 200 VDCW (SPN 4006200-29)		1
	14	M39014-02-1302	.CAPACITOR,CERAMIC 22,000 UUF ±10% 100 VDCW (SPN 4006200-53)		1

- ITEM NOT ILLUSTRATED

FIG. ITEM		PART NUMBER	NOMENCLATURE 1234567	EFF CODE	UNITS PER ASSY
14	15	M39014-02-1310	.CAPACITOR,CERAMIC 100,000 UUF ±10% 100 VDCW (SPN 4006200-61)		7
	16	CL67BG220MPG	.CAPACITOR,ELECTROLYTIC 22 UF ±20% 25 VDCW (SPN 4026910-24)		2
	17	CL67BJ100MPG	.CAPACITOR,ELECTROLYTIC 10 UF ±20% 50 VDCW (SPN 4026910-34)		2
	18	2501375-341	.MICROCIRCUIT (SEL FR PN SL20312 MADE BY V07263)		3
	19	SL20369	.AMPLIFIER (V07263) (SPN 2501477-323)		5
	20	2N2102	.TRANSISTOR (V02735) (SPN 2504076-2)		1
	21	2500264-24	.TRANSISTOR (SEL FR PN RS1742 MADE BY V49956)		2
	22	JANTX2N3421	.TRANSISTOR (SPN 2504280-504)		7
	23	2N2907A	.TRANSISTOR (V49956) (SPN 2504649-2)		14
	24	JAN2N718A	.TRANSISTOR (SPN 2504651-10)		7
	25	SS5709H	.TRANSISTOR (V04713) (SPN 4006809-55)		1
	26	4008219-20	.TRANSISTOR (SEL FR PN 2N3496 MADE BY V04713)		1
	27	2N3439	.TRANSISTOR (V02735) (SPN 4017572-20)		4
	28	MJ5416	.TRANSISTOR (V04713) (SPN 4024222-20)		1
	29	JAN1N4148-1	.DIODE (SPN 2503517-101)		13
	30	1N5618	.DIODE (V14099) (SPN 4025887-203)		6
	31	1N5550	.DIODE (V14099) (SPN 4009286-201)		11
	32	1N4467	.DIODE (V12969) (SPN 2503676-225)		1
	33	1N4469	.DIODE (V12969) (SPN 2503676-227)		1

FIG. ITEM		PART NUMBER	NOMENCLATURE 1234567	EFF CODE	UNITS PER ASSY
14	34	1N4475	.DIODE (V12969) (SPN 2503676-233)		1
	35	E2646-2	.DIODE (V01295) (SPN 2503687-208)		1
	36	E2651-2	.DIODE (V01295) (SPN 2503687-213)		2
	37	1N941B	.DIODE (V12954) (SPN 2503799-214)		1
	38	DZ740609G	.DIODE (V12954) (SPN 2504035-253)		1
	39	DZ40506J	.DIODE (V12954) (SPN 2586239-209)		1
	40	DZ40506M	.DIODE (V12954) (SPN 2586239-212)		1
	41	DZ40506R	.DIODE (V12954) (SPN 2586239-216)		1
	42	NA4-20PMD	.RESISTOR,FILM 20 OHMS ±0.5% 1/8 W (V14674) (SPN 2500169-229)		2
	43	NA4-20-50PMD	.RESISTOR,FILM 20.50 OHMS ±0.5% 1/8 W (V14674) (SPN 2500169-230)		1
	44	NA4-100PMD	.RESISTOR,FILM 100 OHMS ±0.5% 1/8 W (V14674) (SPN 2500169-296)		1
	45	NA4-499PMD	.RESISTOR,FILM 499 OHMS ±0.5% 1/8 W (V14674) (SPN 2500169-363)		1
	46	NA4-750PMD	.RESISTOR,FILM 750 OHMS ±0.5% 1/8 W (V14674) (SPN 2500169-380)		1
	47	NA4-1000PMD	.RESISTOR,FILM 1000 OHMS ±0.5% 1/8 W (V14674) (SPN 2500169-392)		5
	48	NA4-1300PMD	.RESISTOR,FILM 1300 OHMS ±0.5% 1/8 W (V14674) (SPN 2500169-403)		7
	49	NA4-1500PMD	.RESISTOR,FILM 1500 OHMS ±0.5% 1/8 W (V14674) (SPN 2500169-409)		1
	50	NA4-1820PMD	.RESISTOR,FILM 1820 OHMS ±0.5% 1/8 W (V14674) (SPN 2500169-417)		5

FIG. ITEM	PART NUMBER	NOMENCLATURE 1234567	EFF CODE	UNITS PER ASSY
14 51	NA4-2000PMD	.RESISTOR,FILM 2000 OHMS ±0.5% 1/8 W (V14674) (SPN 2500169-421)		2
52	NA4-2260PMD	.RESISTOR,FILM 2260 OHMS ±0.5% 1/8 W (V14674) (SPN 2500169-426)		1
53	NA4-2430PMD	.RESISTOR,FILM 2430 OHMS ±0.5% 1/8 W (V14674) (SPN 2500169-429)		1
54	NA4-2610PMD	.RESISTOR,FILM 2610 OHMS ±0.5% 1/8 W (V14674) (SPN 2500169-432)		1
55	NA4-3010PMD	.RESISTOR,FILM 3010 OHMS ±0.5% 1/8 W (V14674) (SPN 2500169-438)		4
56	NA4-3570PMD	.RESISTOR,FILM 3570 OHMS ±0.5% 1/8 W (V14674) (SPN 2500169-445)		1
57	NA4-6650PMD	.RESISTOR,FILM 6650 OHMS ±0.5% 1/8 W (V14674) (SPN 2500169-471)		1
58	NA4-7150PMD	.RESISTOR,FILM 7150 OHMS ±0.5% 1/8 W (V14674) (SPN 2500169-474)		1
59	NA4-7870PMD	.RESISTOR,FILM 7870 OHMS ±0.5% 1/8 W (V14674) (SPN 2500169-478)		1
60	NA4-9090PMD	.RESISTOR,FILM 9090 OHMS ±0.5% 1/8 W (V14674) (SPN 2500169-484)		1
61	NA4-10000PMD	.RESISTOR,FILM 10,000 OHMS ±0.5% 1/8 W (V14674) (SPN 2500169-488)		5
62	NA4-11300PMD	.RESISTOR,FILM 11,300 OHMS ±0.5% 1/8 W (V14674) (SPN 2500169-493)		1
63	NA4-11800PMD	.RESISTOR,FILM 11,800 OHMS ±0.5% 1/8 W (V14674) (SPN 2500169-495)		1
64	NA4-17400PMD	.RESISTOR,FILM 17,400 OHMS ±0.5% 1/8 W (V14674) (SPN 2500169-511)		1

FIG. ITEM		PART NUMBER	NOMENCLATURE 1234567	EFF CODE	UNITS PER ASSY
14	65	NA4-20000PMD	.RESISTOR,FILM 20,000 OHMS ±.1% 1/8 W (V14674) (SPN 2500169-517)		5
	66	NA4-21000PMD	.RESISTOR,FILM 21,000 OHMS ±0.5% 1/8 W (V14674) (SPN 2500169-519)		1
	67	NA4-30100PMD	.RESISTOR,FILM 30,100 OHMS ±0.5% 1/8 W (V14674) (SPN 2500169-534)		1
	68	NA4-0-100PMD	.RESISTOR,FILM 0.100 MEGO ±0.5% 1/8 W (V14674) (SPN 2500169-584)		1
	69	NA4-0-150PMD	.RESISTOR,FILM 0.150 MEGO ±0.5% 1/8 W (V14674) (SPN 2500169-601)		1
	70	NA4-0-174PMD	.RESISTOR,FILM 0.174 MEGO ±0.5% 1/8 W (V14674) (SPN 2500169-607)		1
	71	RCR32G102JR	.RESISTOR,COMPOSITION 1000 OHMS ±5% 1 W (SPN 2500930-49)		1
	72	RCR32G222JR	.RESISTOR,COMPOSITION 2200 OHMS ±5% 1 W (SPN 2500930-57)		1
	73	RCR32G622JR	.RESISTOR,COMPOSITION 6200 OHMS ±5% 1 W (SPN 2500930-68)		1
	74	RCR32G223JR	.RESISTOR,COMPOSITION 22,000 OHMS ±5% 1 W (SPN 2500930-81)		2
	75	RCR32G243JR	.RESISTOR,COMPOSITION 24,000 OHMS ±5% 1 W (SPN 2500930-82)		2
	76	RCR20G511JR	.RESISTOR,COMPOSITION 510 OHMS ±5% 1/2 W (SPN 2500931-42)		1
	77	RCR20G621JR	.RESISTOR,COMPOSITION 620 OHMS ±5% 1/2 W (SPN 2500931-44)		1
	78	RCR20G154JR	.RESISTOR,COMPOSITION 0.15 MEGO ±5% 1/2 W (SPN 2500931-101)		1

FIG. ITEM		PART NUMBER	NOMENCLATURE 1234567	EFF CODE	UNITS PER ASSY
14	79	RCR07G510JR	.RESISTOR,COMPOSITION 51 OHMS ±5% 1/4 W (SPN 2500932-18)		2
	80	RCR07G101JR	.RESISTOR,COMPOSITION 100 OHMS ±5% 1/4 W (SPN 2500932-25)		1
	81	RCR07G121JR	.RESISTOR,COMPOSITION 120 OHMS ±5% 1/4 W (SPN 2500932-27)		7
	82	RCR07G241JR	.RESISTOR,COMPOSITION 240 OHMS ±5% 1/4 W (SPN 2500932-34)		2
	83	RCR07G331JR	.RESISTOR,COMPOSITION 330 OHMS ±5% 1/4 W (SPN 2500932-37)		1
	84	RCR07G751JR	.RESISTOR,COMPOSITION 750 OHMS ±5% 1/4 W (SPN 2500932-46)		1
	85	RCR07G102JR	.RESISTOR,COMPOSITION 1000 OHMS ±5% 1/4 W (SPN 2500932-49)		11
	86	RCR07G132JR	.RESISTOR,COMPOSITION 1300 OHMS ±5% 1/4 W (SPN 2500932-52)		2
	87	RCR07G182JR	.RESISTOR,COMPOSITION 1800 OHMS ±5% 1/4 W (SPN 2500932-55)		10
	88	RCR07G202JR	.RESISTOR,COMPOSITION 2000 OHMS ±5% 1/4 W (SPN 2500932-56)		2
	89	RCR07G103JR	.RESISTOR,COMPOSITION 10,000 OHMS ±5% 1/4 W (SPN 2500932-73)		1
	90	RCR07G133JR	.RESISTOR,COMPOSITION 13,000 OHMS ±5% 1/4 W (SPN 2500932-76)		2
	91	RCR07G223JR	.RESISTOR,COMPOSITION 22,000 OHMS ±5% 1/4 W (SPN 2500932-81)		1
	92	RCR07G333JR	.RESISTOR,COMPOSITION 33,000 OHMS ±5% 1/4 W (SPN 2500932-85)		1

FIG. ITEM	PART NUMBER	NOMENCLATURE 1234567	EFF CODE	UNITS PER ASSY
14 93	RCR07G184JR	.RESISTOR,COMPOSITION 0.18 MEGO ±5% 1/4 W (SPN 2500932-103)		1
94	RCR07G224JR	.RESISTOR,COMPOSITION 0.22 MEGO ±5% 1/4 W (SPN 2500932-105)		1
95	RCR07G105JR	.RESISTOR,COMPOSITION 1 MEGO ±5% 1/4 W (SPN 2500932-121)		1
96	RLR20C68R0GR	.RESISTOR,FILM 68 OHMS ±2% 1/2 W (SPN 2501470-21)		7
97	RL07S510G	.RESISTOR,FILM 51 OHMS ±2% 1/4 W (SPN 2504364-18)		1
98	RL07S221G	.RESISTOR,FILM 220 OHMS ±2% 1/4 W (SPN 2504364-33)		2
99	RW69VR62	.RESISTOR,WIREWOUND 0.62 OHMS ±10% 3 W (SPN 337708-20)		1
100	SS-010-17	.RESISTOR,THERMAL 220 OHMS ±10% 1/2 W (V15454) (SPN 4007039-17)		1
101	SS-010-34	.RESISTOR,THERMAL 5600 OHMS ±10% 1/2 W (V15454) (SPN 4007039-34)		1
102	4014168-909	.RESISTOR ASSORTMENT (SELECT A RESISTANCE VALUE FROM 10 OHMS THRU .499 MEGOHMS AS SPN 2500169-200 THRU 2500169-651 AND 0.51 MEGOHMS THRU 22.0 MEGOHMS AS SPN 2500932-114 THRU 2500932-153)		1
103	10463-1DAP	.PAD (V07047) (SPN 2500185-1)		24
104	10462-1DAP	.PAD (V07047) (SPN 2500185)		22
105	516	.SPACER (V53101) (SPN 2504155-7)		22

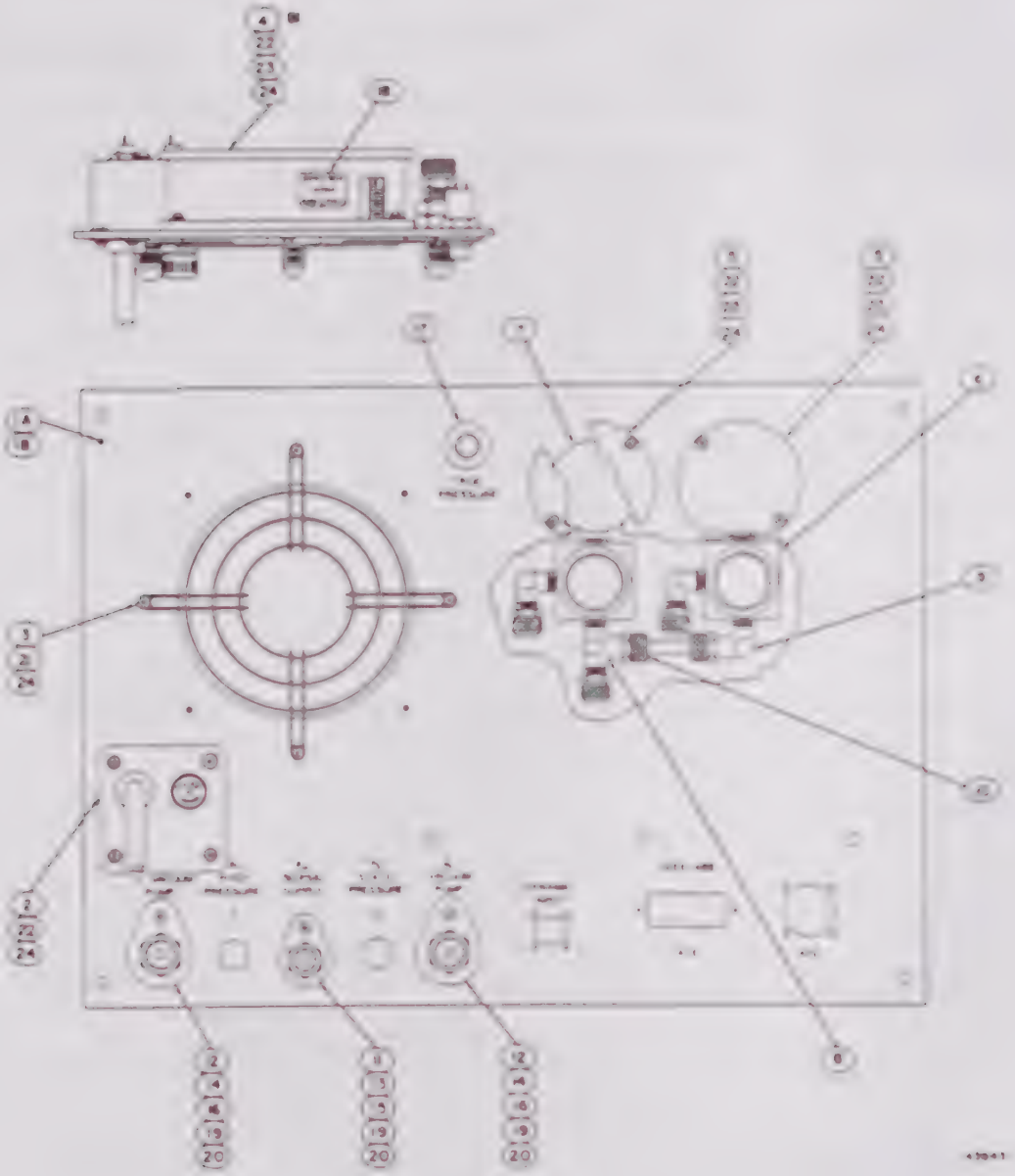

Test Rear Panel
Figure 5-15

	FIG. ITEM	PART NUMBER	NOMENCLATURE 1234567	EFF CODE	UNITS PER ASSY
15-	1	4047694	.PANEL,TEST,REAR (SEE FIG.2 ITEM 4 FOR NHA)		RF
	1A	4047872	.PANEL,TEST,ELECTRICAL- REAR		1
	1B	S440-3C	..NUT STL 4-40 (V46384) (SPN 0405-6)		7
	2	4032228	.POWER CORD ASSEMBLY (SEE FIG.16 FOR DETAILS) (DESIGN AND PRODUCTION CRITICAL)		1
	3	65-175	.GUARD (V92702) (SPN 4025998)		1
	4	026982	.FAN,TUBEAXIAL (V82877) (SPN 4030943) (PRODUCTION CRITICAL)		1
	5	4022950	.COVER		2
	6	R00-01LP0	.REGULATOR,PRESSURE (V98963) (SPN 4022524)		2
R	7	P500-1-8LM11-2	.GAUGE,PRESSURE,DIAL INDICATING (V61349) (SPN 4022523)		2
	8	B400-3TMTKN	.TEE (V02570) (SPN 4022513-1)		1
	9	B400-2-2KN	.ELBOW (V02570) (SPN 4022531-1)		3
	10	B405-170	.INSERT (V02570) (SPN 4013152-1)		2
	11	SS400-61-4AN	.UNION,TUBE (V02570) (SPN 4022527-1)		1
	12	SS600-61-6ANKN	.UNION,TUBE (V02570) (SPN 4022527-3)		2
	13	S402-61F	.RETAINER,BULKHEAD (V02570) (SPN 4012731)		1
	14	S602-61F	.RETAINER,BULKHEAD (V02570) (SPN 4012731-2)		2
	15	SS402-61	.NUT HEX SST 7-16 20 (V02570) (SPN 4022527-6)		1
	16	SS602-61	.NUT HEX SST 9-16 20 (V02570) (SPN 4022527-7)		2
	17	W101P6	.SWITCH,PUSH (V81640) (SPN 2500745-1)		1
	18	4012411	.PLATE,IDENTIFICATION		1

- ITEM NOT ILLUSTRATED

FIG. ITEM		PART NUMBER	NOMENCLATURE 1234567	EFF CODE	UNITS PER ASSY
15	19	MS51957-31	.SCREW PNH CRES 6-32X5-8 (SPN 0919-31)		3
	20	MS21042L06	.NUT SLFLKG HEX STL 6-32 (SPN 2500929-3)		3
	21	MS51957-14	.SCREW PNH CRES 4-40X5-16 (SPN 0919-14)		4
	22	MS51957-16	.SCREW PNH CRES 4-40X7-16 (SPN 0919-16)		11
	23	MS35338-135	.WASHER,LOCK CRES 0.112 ID (SPN 0164-5)		8
	24	MS15795-803	.WASHER,FLAT CRES 0.125 ID (SPN 0770-5)		15

This page was intentionally left blank.

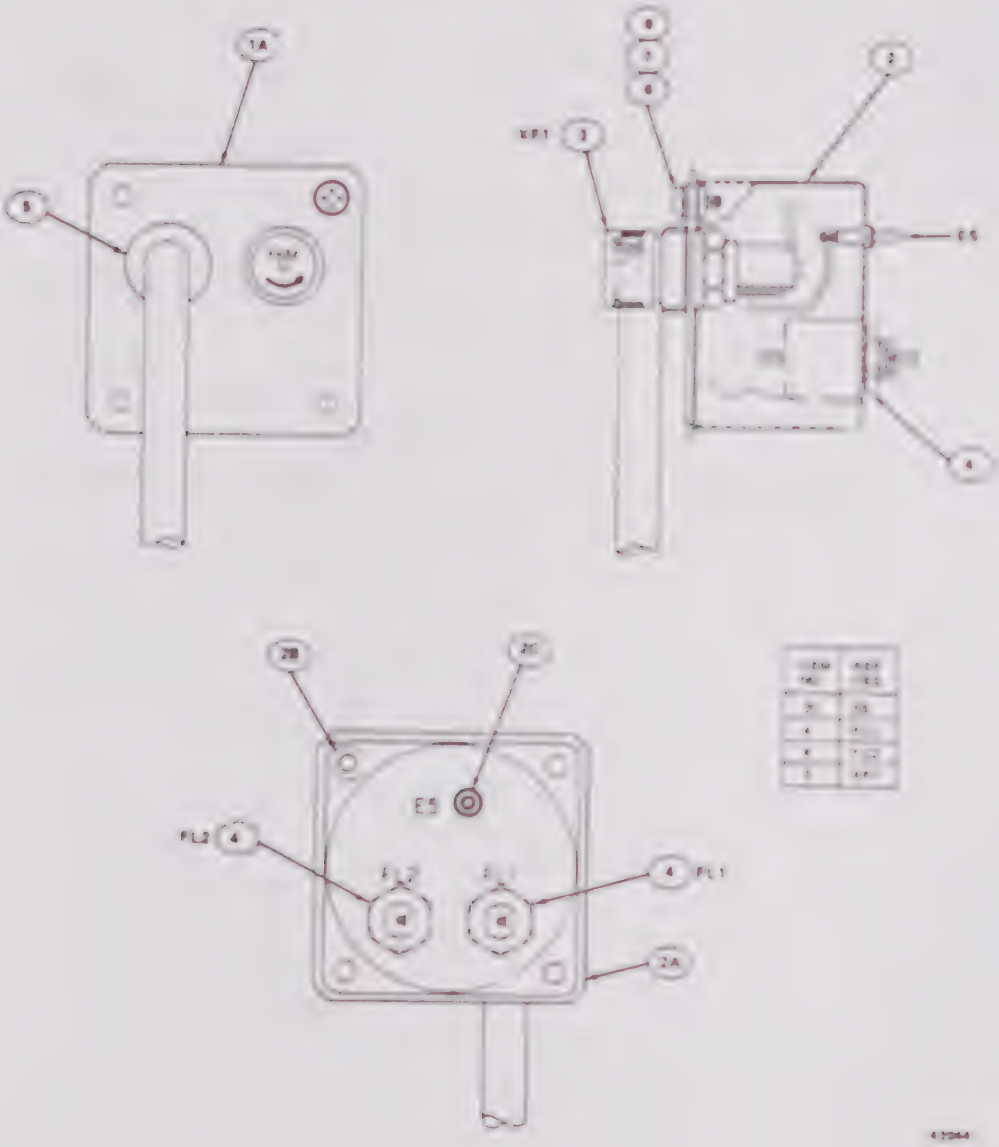

Power Cord Assembly
Figure 5-16

FIG. ITEM	PART NUMBER	NOMENCLATURE 1234567	EFF CODE	UNITS PER ASSY
16- 1	4032228	POWER CORD ASSEMBLY (SEE FIG.15 ITEM 2 FOR NHA)		RF
1A	4032227	.PLATE,POWER CORD		1
2	4032234	.CASE-RFI		1
2A	HU8470-1-500AL	..ENCLOSURE, ELECTROMAGNETIC SHIELDNG (V02875) (SPN 4022593-150)		1
2B	S632-0C	..NUT, STL 6-32 (V46384) (SPN 0405-26)		1
2C	2554039-1	..PROBE,TEST (SEL FR PN 011-4029-000319 MADE BY V98291)		1
3	FHN20G	.FUSEHOLDER (SPN 2500157)		1
4	51-320-025	.FILTER,RADIO FREQUENCY (V33095) (SPN 4032324)		2
5	SR7P2	.BUSHING (V28520) (SPN 2503692-5)		1
6	MS15795-805	.WASHER,FLAT CRES 0.156 ID (SPN 0770-7)		1
7	MS35338-136	.WASHER,LOCK CRES 0.138 ID (SPN 0164-7)		1
9	MS51957-27	.SCREW PNH CRES 6-32X5-16 (SPN 0919-27)		1

- ITEM NOT ILLUSTRATED

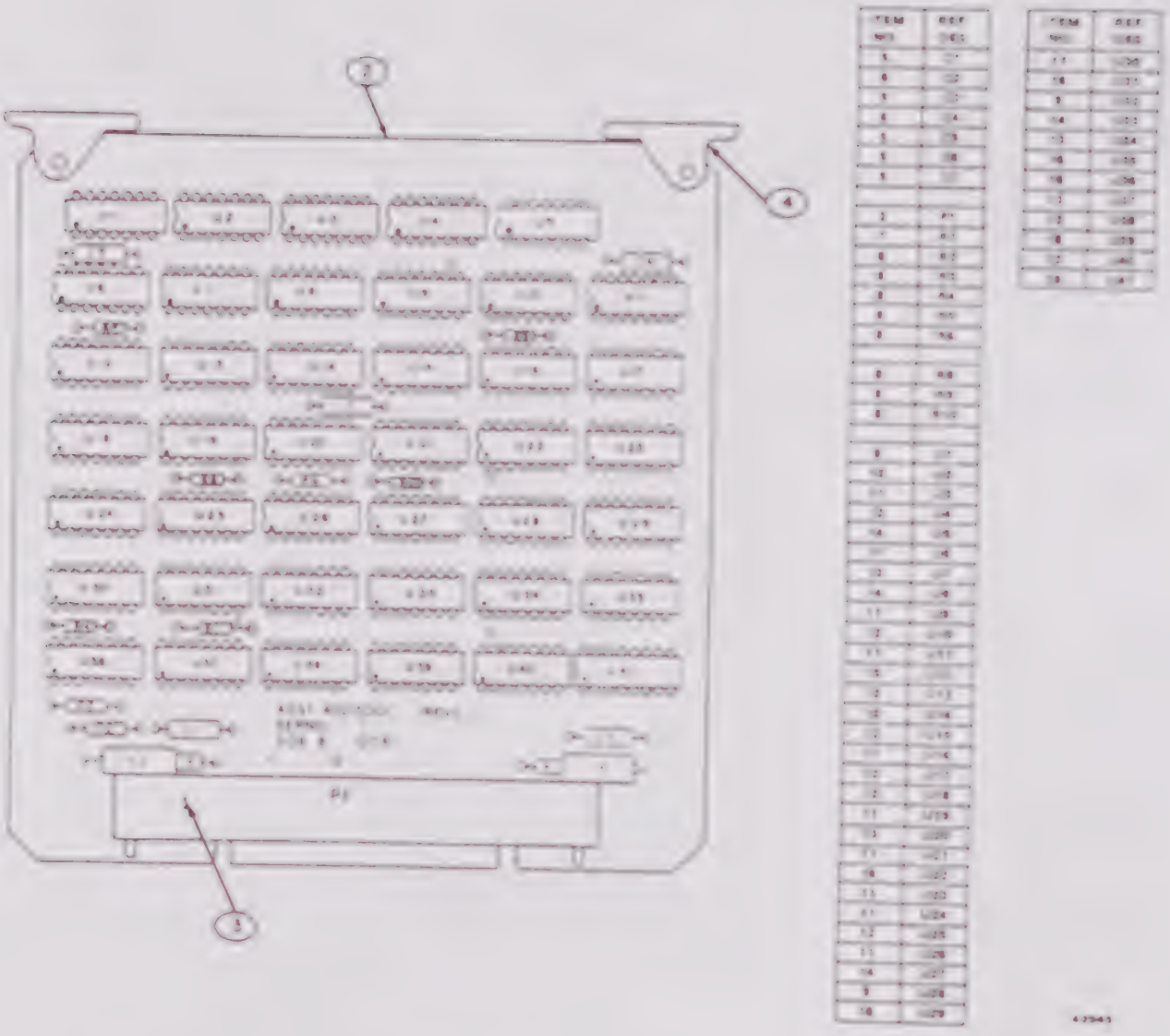

Timing Control Circuit Card Assembly
Figure 5-17

FIG. ITEM		PART NUMBER	NOMENCLATURE 1234567	EFF CODE	UNITS PER ASSY
17-	1	4021530-901	CIRCUIT CARD ASSEMBLY- TIMING CONTROL (SEE FIG.2 ITEM 9 FOR NHA)		RF
	2	4021531	.PRINTED WIRING BOARD- TIMING CONTROL		1
	3	000403-0100	.CONNECTOR (V05041) (SPN 4004551)		1
	4	S203BLACK	.EXTRACTOR (V18677) (SPN 2500397-2)		2
	5	CK14BR104K	.CAPACITOR,CERAMIC 100,000 UUF ±10% 100 VDCW (SPN 2501629-61)		5
	6	CL67BE330MPG	.CAPACITOR,ELECTROLYTIC 33 UF ±20% 15 VDCW (SPN 2503221-18)		2
	7	NA4-301PMD	.RESISTOR,FILM 301 OHMS ±0.5% 1/8 W (V14674) (SPN 2500169-342)		1
	8	RL07S102G	.RESISTOR,FILM 1000 OHMS ±2% 1/4 W (SPN 2504364-49)		8
	9	SN23806J	.INTEGRATED CIRCUIT (V01295) (SPN 4003165-402)		3
	10	CL630F	.MICROCIRCUIT,DIGITAL (V18324) (SPN 4011305-400)		2
	11	SN23809J	.INTEGRATED CIRCUIT (V01295) (SPN 4003165-410)		10
	12	SN23805J	.INTEGRATED CIRCUIT (V01295) (SPN 4003165-400)		9
	13	SN23808J	.INTEGRATED CIRCUIT (V01295) (SPN 4003165-404)		4
	14	4003485-474	.MICROCIRCUIT (SEL FR PN SN33250 MADE BY V01295)		4
	15	SN23810J	.INTEGRATED CIRCUIT (V01295) (SPN 4003165-420)		1
	16	SN24244J	.INTEGRATED CIRCUIT (V01295) (SPN 4005545-450)		5
	17	CL631F	.MICROCIRCUIT,DIGITAL (V18324) (SPN 4011305-404)		1
	18	CL634F	.MICROCIRCUIT,DIGITAL (V18324) (SPN 4011305-420)		1
	19	4002669-475	.INTEGRATED CIRCUIT (SEL FR PN SN23799J MADE BY V01295)		1

- ITEM NOT ILLUSTRATED

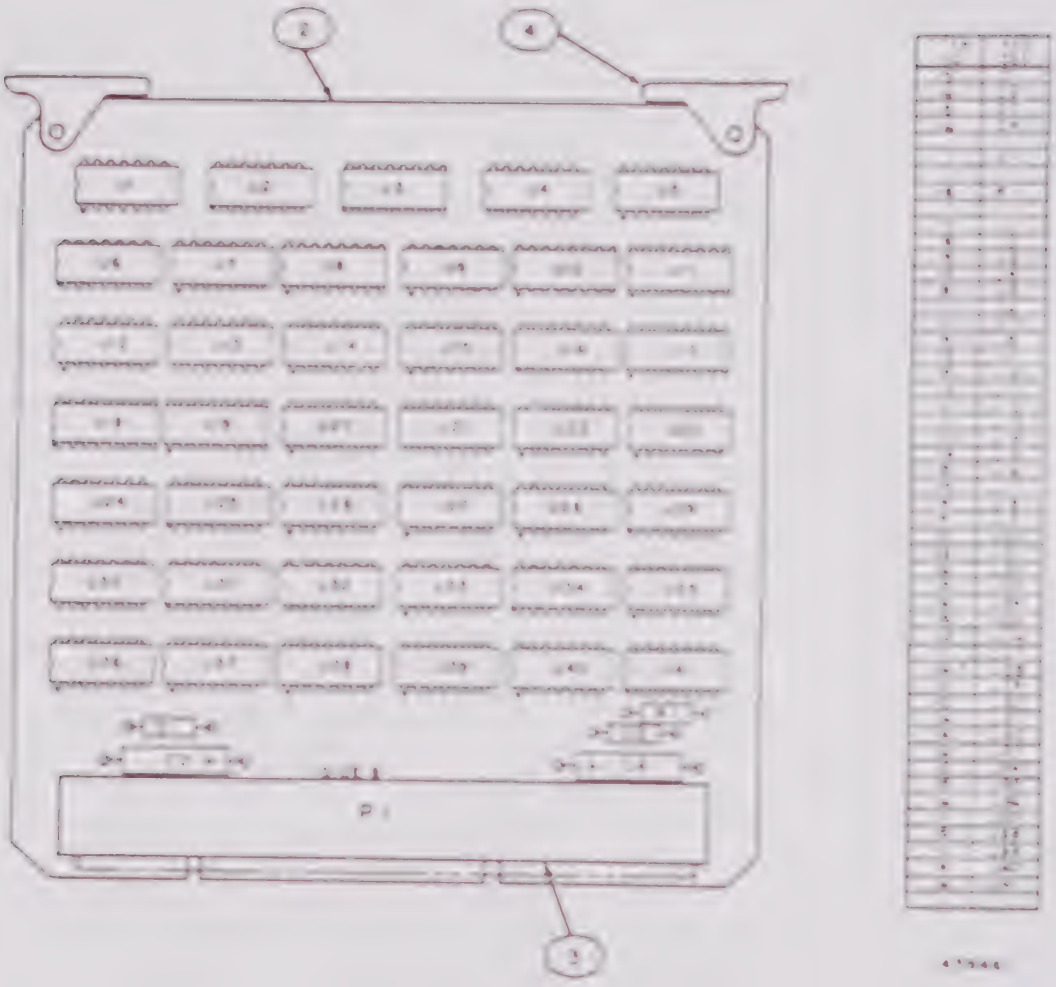

Program Control Circuit Card Assembly
Figure 5-18

FIG. ITEM		PART NUMBER	NOMENCLATURE 1234567	EFF CODE	UNITS PER ASSY
18-	1	4021532-901	CIRCUIT CARD ASSEMBLY- PROGRAM CONTROL (SEE FIG.2 ITEM 10 FOR NHA)		RF
	2	4021533	.PRINTED WIRING BOARD- PROGRAM CONTROL		1
	3	4008387	.CONNECTOR (SEL FR PN 000-403-0166 MADE BY V05041)		1
	4	S203BLACK	.EXTRACTOR (V18677) (SPN 2500397-2)		2
	5	CK14BR104K	.CAPACITOR,CERAMIC 100,000 UUF ±10% 100 VDCW (SPN 2501629-61)		2
	6	CL67BE330MPG	.CAPACITOR,ELECTROLYTIC 33 UF ±20% 15 VDCW (SPN 2503221-18)		2
	7	CL631F	.MICROCIRCUIT,DIGITAL (V18324) (SPN 4011305-404)		1
	8	CL630F	.MICROCIRCUIT,DIGITAL (V18324) (SPN 4011305-400)		3
	9	4002669-475	.INTEGRATED CIRCUIT (SEL FR PN SN23799J MADE BY V01295)		5
	10	CL634F	.MICROCIRCUIT,DIGITAL (V18324) (SPN 4011305-420)		2
	11	SN24244J	.INTEGRATED CIRCUIT (V01295) (SPN 4005545-450)		9
	12	SN23809J	.INTEGRATED CIRCUIT (V01295) (SPN 4003165-410)		4
	13	4002646-442	.INTEGRATED CIRCUIT (SEL FR PN SN23812 MADE BY V01295)		2
	14	SN23808J	.INTEGRATED CIRCUIT (V01295) (SPN 4003165-404)		3
	15	SN23805J	.INTEGRATED CIRCUIT (V01295) (SPN 4003165-400)		5
	16	SN23806J	.INTEGRATED CIRCUIT (V01295) (SPN 4003165-402)		7
	18	NA4-294PMD	.RESISTOR,FILM 294 OHMS ±0.5% 1/8 W (V14674) (SPN 2500169-341)		1

- ITEM NOT ILLUSTRATED

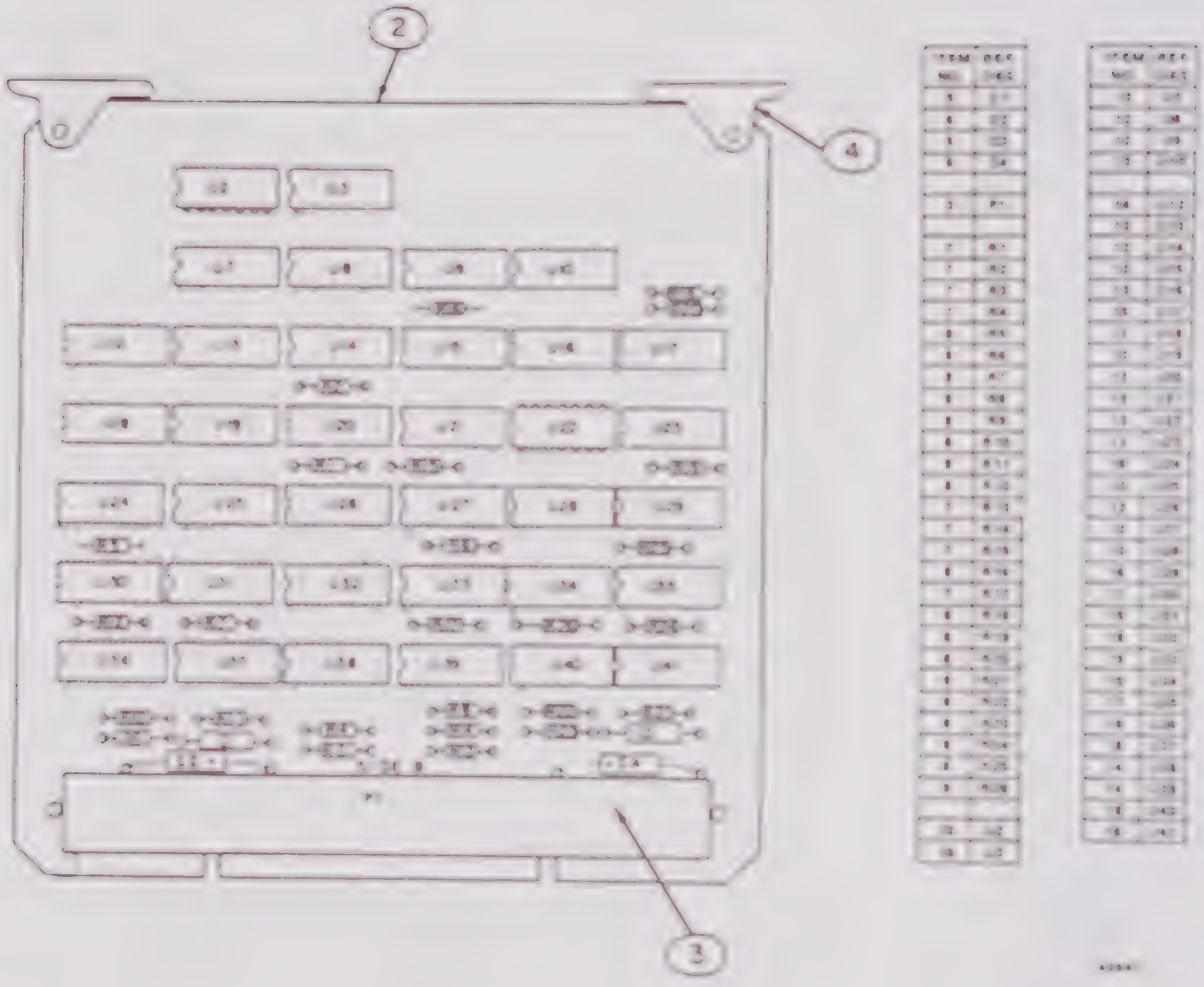

Arithmetic A or B Circuit Card Assembly
Figure 5-19

	FIG. ITEM	PART NUMBER	NOMENCLATURE 1234567	EFF CODE	UNITS PER ASSY
19-	1	4021534-901	CIRCUIT CARD ASSEMBLY- ARITHMETIC A OR B (SEE FIG.2 ITEM 11 FOR NHA)		RF
	2	4021535	.PRINTED WIRING BOARD- ARITHMETIC NO. 1 OR NO. 2		1
	3	4008387	.CONNECTOR (SEL FR PN 000-403-0166 MADE BY V05041)		1
	4	S203BLACK	.EXTRACTOR (V18677) (SPN 2500397-2)		2
	5	CK14BR104K	.CAPACITOR,CERAMIC 100,000 UUF ±10% 100 VDCW (SPN 2501629-61)		2
	6	CL67BE330MPG	.CAPACITOR,ELECTROLYTIC 33 UF ±20% 15 VDCW (SPN 2503221-18)		2
	7	RCR07G821JR	.RESISTOR,COMPOSITION 820 OHMS ±5% 1/4 W (SPN 2500932-47)		8
	8	RL07S102G	.RESISTOR,FILM 1000 OHMS ±2% 1/4 W (SPN 2504364-49)		17
	9	NA4-287PMD	.RESISTOR,FILM 287 OHMS ±0.5% 1/8 W (V14674) (SPN 2500169-340)		1
	10	4003485-474	.MICROCIRCUIT (SEL FR PN SN33250 MADE BY V01295)		2
	11	SN23806J	.INTEGRATED CIRCUIT (V01295) (SPN 4003165-402)		2
	12	SN54H62J	.MICROCIRCUIT,DIGITAL (V01295) (SPN 4021562-462)		8
	13	SN24244J	.INTEGRATED CIRCUIT (V01295) (SPN 4005545-450)		8
	14	SN23809J	.INTEGRATED CIRCUIT (V01295) (SPN 4003165-410)		3
	15	4002669-475	.INTEGRATED CIRCUIT (SEL FR PN SN23799J MADE BY V01295)		3
R	16	AM27S02ADM	.MICROCIRCUIT,DIGITAL (V34335) (SPN 4021563-460)		4
	17	SN5483AJ00	.INTEGRATED CIRCUIT,ADDER (V01295) (SPN 4012658-483)		2
	18	CL631F	.MICROCIRCUIT,DIGITAL (V18324) (SPN 4011305-404)		3
	19	SN23808J	.INTEGRATED CIRCUIT (V01295) (SPN 4003165-404)		1

- ITEM NOT ILLUSTRATED

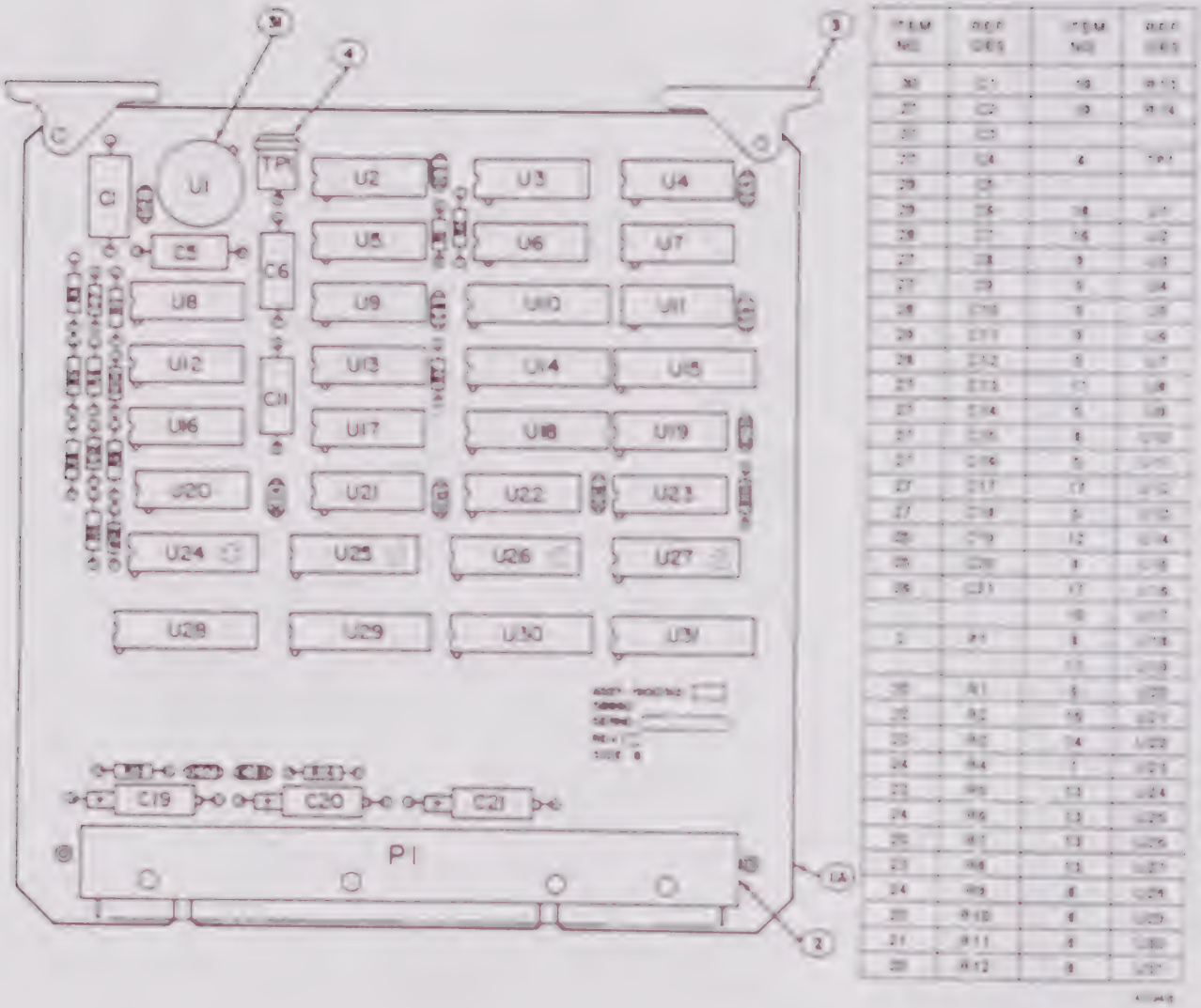

Control and Scratchpad Circuit Card Assembly
Figure 5-20

FIG. ITEM		PART NUMBER	NOMENCLATURE 1234567	EFF CODE	UNITS PER ASSY
20-	1	1900312-901	CIRCUIT CARD ASSEMBLY- CONTROL AND SCRATCHPAD (SEE FIG.2 ITEM 84 FOR NHA)		RF
	1A	1900311	.PRINTED WIRING BOARD		1
	2	4008387	.CONNECTOR (SEL FR PN 000-403-0166 MADE BY V05041)		1
	3	S203WHITE	.EXTRACTOR (V18677) (SPN 2500397-1)		2
	4	026-4005-000342	.JACK (V98291) (SPN 4018679-2)		1
	5	SNJ54LS00J	.MICROCIRCUIT (V01295) (SPN 4026864-401)		6
	6	SNJ54LS04J	.MICROCIRCUIT (V01295) (SPN 4026864-403)		1
	7	SN13717	.MICROCIRCUIT (V01295) (SPN 2501675-445)		1
	8	SNJ54LS244J	.MICROCIRCUIT (V01295) (SPN 4045321-444)		7
	9	SNJ54LS10J	.MICROCIRCUIT (V01295) (SPN 4026864-405)		2
	10	M38510-30007BCX	.MICROCIRCUIT (SPN 4030899-607)		1
	11	M38510-30703BEX	.MICROCIRCUIT (SPN 4032609-603)		1
	12	SNJ54LS273J	.MICROCIRCUIT,DIGITAL (V01295) (SPN 4045320-473)		1
	13	IM7114L2CJN	.MICROCIRCUIT (V32293) (SPN 4034708-14) **STATIC SENSITIVE DEVICE**		4
	14	SNJ54LS157J	.MICROCIRCUIT (V01295) (SPN 4026872-403)		1
	15	M38510-30301BCX	.MICROCIRCUIT (SPN 4030898-601)		1
	16	SN24336J	.INTEGRATED CIRCUIT (V01295) (SPN 4003165-405)		1
	17	SNJ54LS123J	.MICROCIRCUIT (V01295) (SPN 4038692-423)		3
	18	LH0023CG	.MICROCIRCUIT (V27014) (SPN 4022353-323)		1
	19	RCR07G510JR	.RESISTOR,COMPOSITION 51 OHMS ±5% 1/4 W (SPN 2500932-18)		2

- ITEM NOT ILLUSTRATED

FIG.	ITEM	PART NUMBER	NOMENCLATURE 1234567	EFF CODE	UNITS PER ASSY
20	20	RCR05G103JS	.RESISTOR,COMPOSITION 10,000 OHMS ±5% 1/8 W (SPN 4006559-73)		4
	21	RCR07G102JR	.RESISTOR,COMPOSITION 1000 OHMS ±5% 1/4 W (SPN 2500932-49)		1
	22	NA4-100PMD	.RESISTOR,FILM 100 OHMS ±0.5% 1/8 W (V14674) (SPN 2500169-296)		1
	23	NA4-18200PMD	.RESISTOR,FILM 18,200 OHMS ±0.5% 1/8 W (V14674) (SPN 2500169-513)		3
	24	NA4-13000PMD	.RESISTOR,FILM 13,000 OHMS ±0.5% 1/8 W (V14674) (SPN 2500169-499)		3
	25	M39006-09-8283	.CAPACITOR,ELECTROLYTIC 22 UF ±20% 25 VDCW (SPN 4006205-24)		2
	26	M39006-09-8260	.CAPACITOR,ELECTROLYTIC 15 UF ±20% 15 VDCW (SPN 4006205-17)		1
	27	M39014-01-1553	.CAPACITOR,CERAMIC 100,000 UUF ±10% 50 VDCW (SPN 4006200-73)		11
	28	M39014-05-2043	.CAPACITOR,CERAMIC 2200 UUF ±10% 100 VDCW (SPN 4001750-23)		3
	29	M39014/05-2116	.CAPACITOR,CERAMIC 220UF ±20% 100 VDCW (SPN 4001750-116)		3
	30	SP7-474-9-5	.CAPACITOR,PLASTIC 0.470 UF ±10% 50 VDCW (V84411) (SPN 2500652-33)		1
	31	516	.SPACER (V53101) (SPN 2504155-7)		4

This page was intentionally left blank.

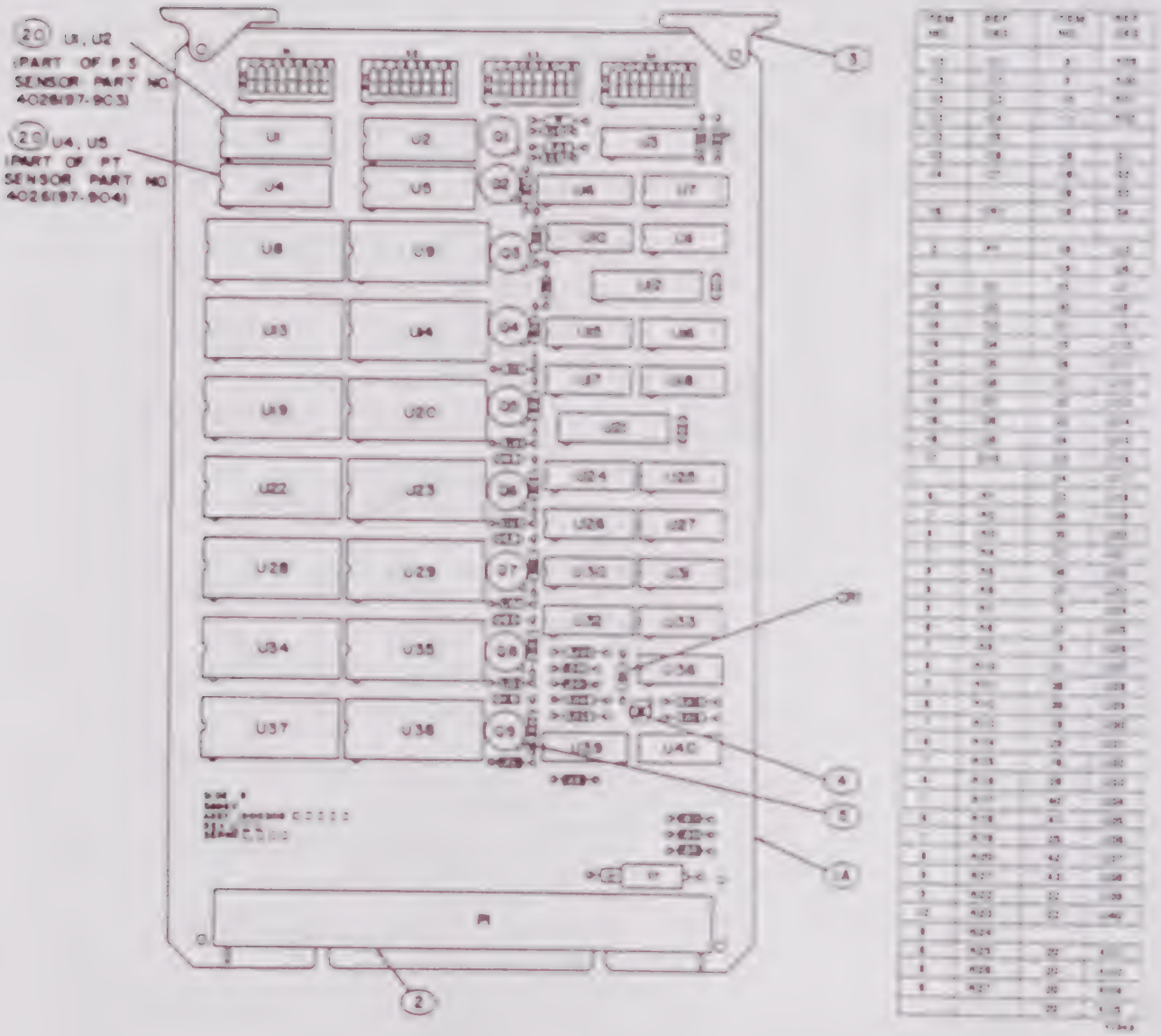

Program and Sensor Memory Board CCA
Figure 5-21

FIG. ITEM	PART NUMBER	NOMENCLATURE 1234567	EFF CODE	UNITS PER ASSY
21- 1	1900308-901	CCA-PROGRAM AND SENSOR MEMORY BOARD (SEE FIG.2 ITEM 12 FOR NHA)		RF
1A	1900307	.PRINTED WIRING BOARD		1
2	4008387	.CONNECTOR (SEL FR PN 000-403-0166 MADE BY V05041)		1
3	S203WHITE	.EXTRACTOR (V18677) (SPN 2500397-1)		2
4	10325DAP	.PAD (V07047) (SPN 2500180-1)		1
5	10463-1DAP	.PAD (V07047) (SPN 2500185-1)		9
6	RCR07G151JR	.RESISTOR,COMPOSITION 150 OHMS ±5% 1/4 W (SPN 2500932-29)		9
7	RCR05G241JS	.RESISTOR,COMPOSITION 240 OHMS ±5% 1/8 W (SPN 4006559-34)		9
8	RCR07G102JR	.RESISTOR,COMPOSITION 1000 OHMS ±5% 1/4 W (SPN 2500932-49)		4
9	RCR05G103JS	.RESISTOR,COMPOSITION 10,000 OHMS ±5% 1/8 W (SPN 4006559-73)		7
10	RCR05G622JS	.RESISTOR,COMPOSITION 6200 OHMS ±5% 1/8 W (SPN 4006559-68)		1
11	RCR05G302JS	.RESISTOR,COMPOSITION 3000 OHMS ±5% 1/8 W (SPN 4006559-60)		1
12	RCR07G122JR	.RESISTOR,COMPOSITION 1200 OHMS ±5% 1/4 W (SPN 2500932-51)		1
13	M39014-01-1553	.CAPACITOR,CERAMIC 100,000 UUF ±10% 50 VDCW (SPN 4006200-73)		6
14	CL67BE150MPG	.CAPACITOR,ELECTROLYTIC 15 UF ±20% 15 VDCW (SPN 4026910-17)		1
15	JAN1N4148-1	.DIODE (SPN 2503517-101)		1
16	2N3762	.TRANSISTOR (V49956) (SPN 4006809-21)		9

- ITEM NOT ILLUSTRATED

FIG. ITEM	PART NUMBER	NOMENCLATURE 1234567	EFF CODE	UNITS PER ASSY
21 17	S18429	.TRANSISTOR (V07263) (SPN 2504651-20)		1
18	CTS206-008	.SWITCH,SLIDE,MULI-POLE (V11237) (SPN 4021678-8)		4
19	SN13717	.MICROCIRCUIT (V01295) (SPN 2501675-445)		6
20	4003102-228	.SOCKET		4
21	M38510-305028CX	.MICROCIRCUIT (SPN 4031325-602)		1
22	SNJ54LS04J	.MICROCIRCUIT (V01295) (SPN 4026864-403)		3
23	M38510-300078CX	.MICROCIRCUIT (SPN 4030899-607)		2
24	SNJ54LS10J	.MICROCIRCUIT (V01295) (SPN 4026864-405)		2
25	SNJ54LS00J	.MICROCIRCUIT (V01295) (SPN 4026864-401)		3
26	M38510-303028CX	.MICROCIRCUIT (SPN 4030898-602)		1
27	SNJ54LS244J	.MICROCIRCUIT (V01295) (SPN 4045321-444)		2
28	SD70578	.INTEGRATED CIRCUIT (V27014) (SPN 4016987-438)		1
29	M38510-303018CX	.MICROCIRCUIT (SPN 4030898-601)		1
30	4050400-101	.MICROCIRCUIT		1
31	4050400-102	.MICROCIRCUIT		1
32	4050400-103	.MICROCIRCUIT		1
33	4050400-104	.MICROCIRCUIT		1
34	4050400-105	DELETED		1
35	4050400-106	DELETED		1
36	4050400-107	.MICROCIRCUIT		1
37	4050400-108	.MICROCIRCUIT		1
38	4050400-109	.MICROCIRCUIT		1
39	4050400-110	.MICROCIRCUIT		1
40	4050400-111	.MICROCIRCUIT		1
41	4050400-112	.MICROCIRCUIT		1
42	4050400-113	.MICROCIRCUIT		1
43	4050400-114	.MICROCIRCUIT		1

This page was intentionally left blank.

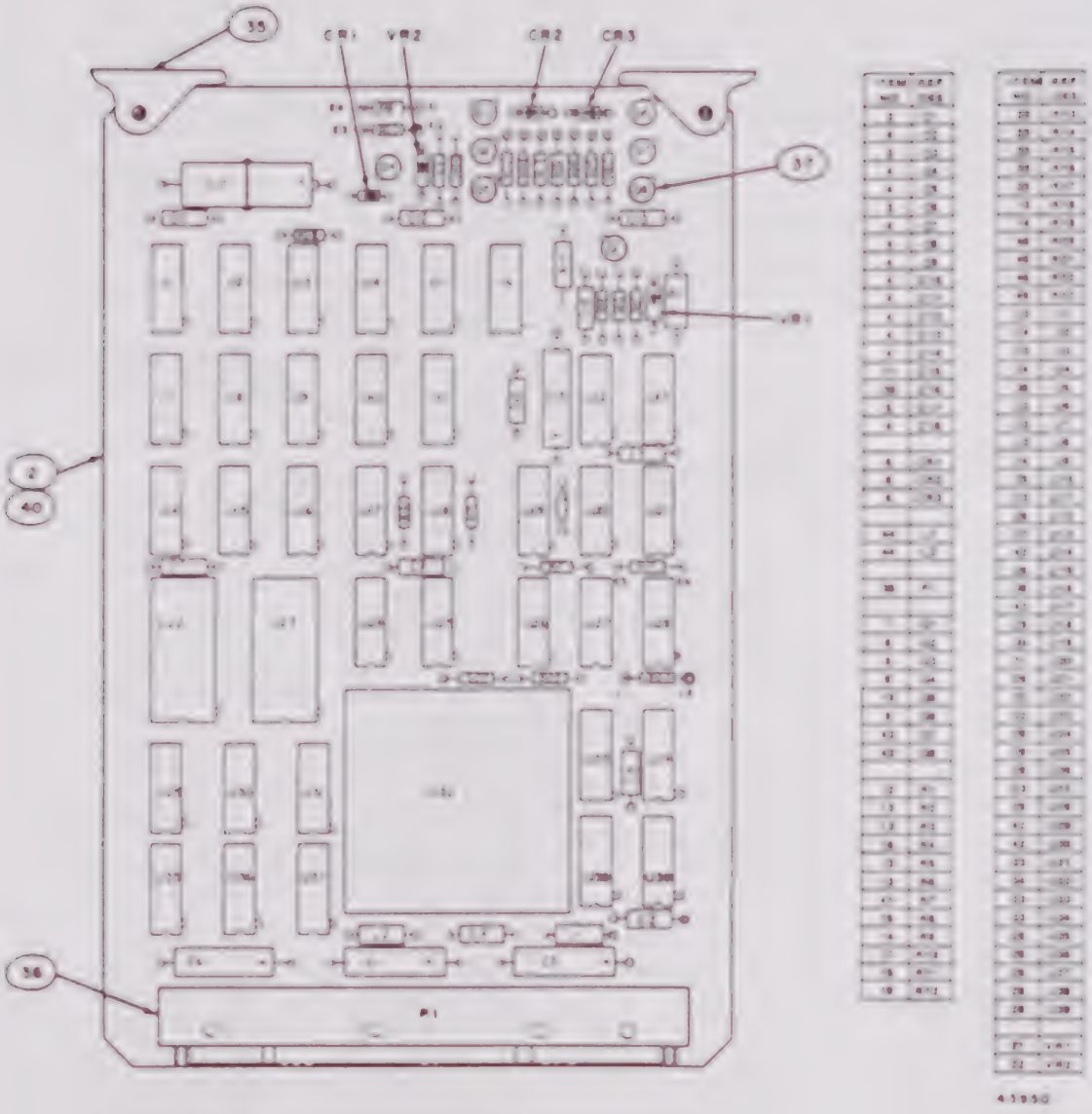

Control and D/A and Central Address
Circuit Card Assembly
Figure 5-22

FIG. ITEM	PART NUMBER	NOMENCLATURE 1234567	EFF CODE	UNITS PER ASSY
22- 1	4022594-901	CIRCUIT CARD ASSEMBLY- CONT AND D/A AND CTL ADRS (SEE FIG.2 ITEM 13 FOR NHA)		RF
2	4022595	.PRINTED WIRING BOARD- CONTROL AND D/A		1
3	CL67BG220MPG	.CAPACITOR,ELECTROLYTIC 22 UF ±20% 25 VDCW (SPN 2503221-24)		3
4	CK14BR104K	.CAPACITOR,CERAMIC 100,000 UUF ±10% 100 VDCW (SPN 2501629-61)		12
5	CL67BH151MPG	.CAPACITOR,ELECTROLYTIC 150 UF ±20% 30 VDCW (SPN 2503221-32)		1
6	JAN1N4148-1	.DIODE (SPN 2503517-101)		3
7	S18429	.TRANSISTOR (V07263) (SPN 2504651-20)		1
8	2500835-21	.TRANSISTOR (SEL FR PN FN1463 MADE BY V17856)		2
9	2N2907A	.TRANSISTOR (V49956) (SPN 2504649-2)		2
10	2N4858	.TRANSISTOR (V27014) (SPN 2501502-601)		1
11	CL67BJ050MPG	.CAPACITOR,ELECTROLYTIC 5 UF ±20% 50 VDCW (SPN 2503221-33)		1
12	RCR20G622JR	.RESISTOR,COMPOSITION 6200 OHMS ±5% 1/2 W (SPN 2500931-68)		1
13	RCR07G102JR	.RESISTOR,COMPOSITION 1000 OHMS ±5% 1/4 W (SPN 2500932-49)		5
14	RCR07G203JR	.RESISTOR,COMPOSITION 20,000 OHMS ±5% 1/4 W (SPN 2500932-80)		2
15	4014168-909	.RESISTOR ASSORTMENT (SELECT A RESISTANCE VALUE FROM 10 OHMS THRU .499 MEGOHMS AS SPN 2500169-200 THRU 2500169-651 AND 0.51 MEGOHMS THRU 22.0 MEGOHMS AS SPN 2500932-114 THRU 2500932-153)		2

- ITEM NOT ILLUSTRATED

FIG. ITEM		PART NUMBER	NOMENCLATURE 1234567	EFF CODE	UNITS PER ASSY
22	16	RL07S511G	.RESISTOR,FILM 510 OHMS ±2% 1/4 W (SPN 2504364-42)		1
	17	RL07S202G	.RESISTOR,FILM 2000 OHMS ±2% 1/4 W (SPN 2504364-56)		1
	19	RL07S104G	.RESISTOR,FILM 100,000 OHMS ±2% 1/4 W (SPN 2504364-97)		1
	20	RL07S103G	.RESISTOR,FILM 10,000 OHMS ±2% 1/4 W (SPN 2504364-73)		5
	21	E2641-2	.DIODE (V01295) (SPN 2503687-203)		1
	22	E2651-2	.DIODE (V01295) (SPN 2503687-213)		1
	23	SN23805J	.INTEGRATED CIRCUIT (V01295) (SPN 4003165-400)		7
	24	SN23809J	.INTEGRATED CIRCUIT (V01295) (SPN 4003165-410)		3
	25	SN54H05J	.MICROCIRCUIT (V01295) (SPN 4023701-405)		2
	26	SD20218	.ELECTRONIC SWITCH (V27014) (SPN 2501402-409)		2
	27	SN54132J00	.MICROCIRCUIT (V01295) (SPN 4022628-432)		1
	28	SN23808J	.INTEGRATED CIRCUIT (V01295) (SPN 4003165-404)		10
	29	SN5433J	.MICROCIRCUIT (V01295) (SPN 4025243-433)		1
	30	DM54L04J	.MICROCIRCUIT (V27014) (SPN 4024019-404)		1
	31	SN24772	.INTEGRATED CIRCUIT (V01295) (SPN 4006195-421)		1
	32	SN87462J	.INTEGRATED CIRCUIT (V01295) (SPN 4003661-454)		2
	33	4002669-475	.INTEGRATED CIRCUIT (SEL FR PN SN23799J MADE BY V01295)		3
	34	700685	.BINDARY,CONVERTER DIGITAL TO ANALOG (V29832) (SPN 4022629)		1
	35	S203BLACK	.EXTRACTOR (V18677) (SPN 2500397-2)		2

FIG. ITEM		PART NUMBER	NOMENCLATURE 1234567	EFF CODE	UNITS PER ASSY
22	36	4008387	.CONNECTOR (SEL FR PN 000-403-0166 MADE BY V05041)		1
	37	10463-1DAP	.PAD (V07047) (SPN 2500185-1)		8
	38	SN23807J	.INTEGRATED CIRCUIT (V01295) (SPN 4003165-403)		1
	39	CK12BX102K	.CAPACITOR,CERAMIC 1000 UUF ±10% 100 VDCW (SPN 2501629-25)		1
	41	RL07S203G	.RESISTOR,FILM 20,000 OHMS ±2% 1/4 W (SPN 2504364-80)		1
	42	SN54H04J	.MICROCIRCUIT (V01295) (SPN 4011573-404)		4
	43	RS1741	.TRANSISTOR (V49956) (SPN 2500264-22)		2
	44	MS75089-23	.COIL (SPN 2504709-49)		2
	45	4003509-915	.RESISTOR,SELECT (SELECT A RESISTANCE VALUE FROM 1000 OHMS THRU 3240 OHMS AS SPN 2500169-392 THRU 2500169-441, 8060 OHMS THRU 12100 OHMS AS SPN 2500169-479 THRU 2500169-496, 19600 OHMS THRU 21500 OHMS AS SPN 2500169-515 THRU 2500169-520, 30100 OHMS THRU 121 MEGOHMS AS SPN 2500169-535 THRU 2500169-592, 140 MEGOHMS THRU 499 MEGOHMS AS SPN 2500169-598 THRU 2500169-651)		2
	46	NA4-20000PMD	.RESISTOR,FILM 20,000 OHMS ±.1% 1/8 W (V14674) (SPN 2500169-517)		2

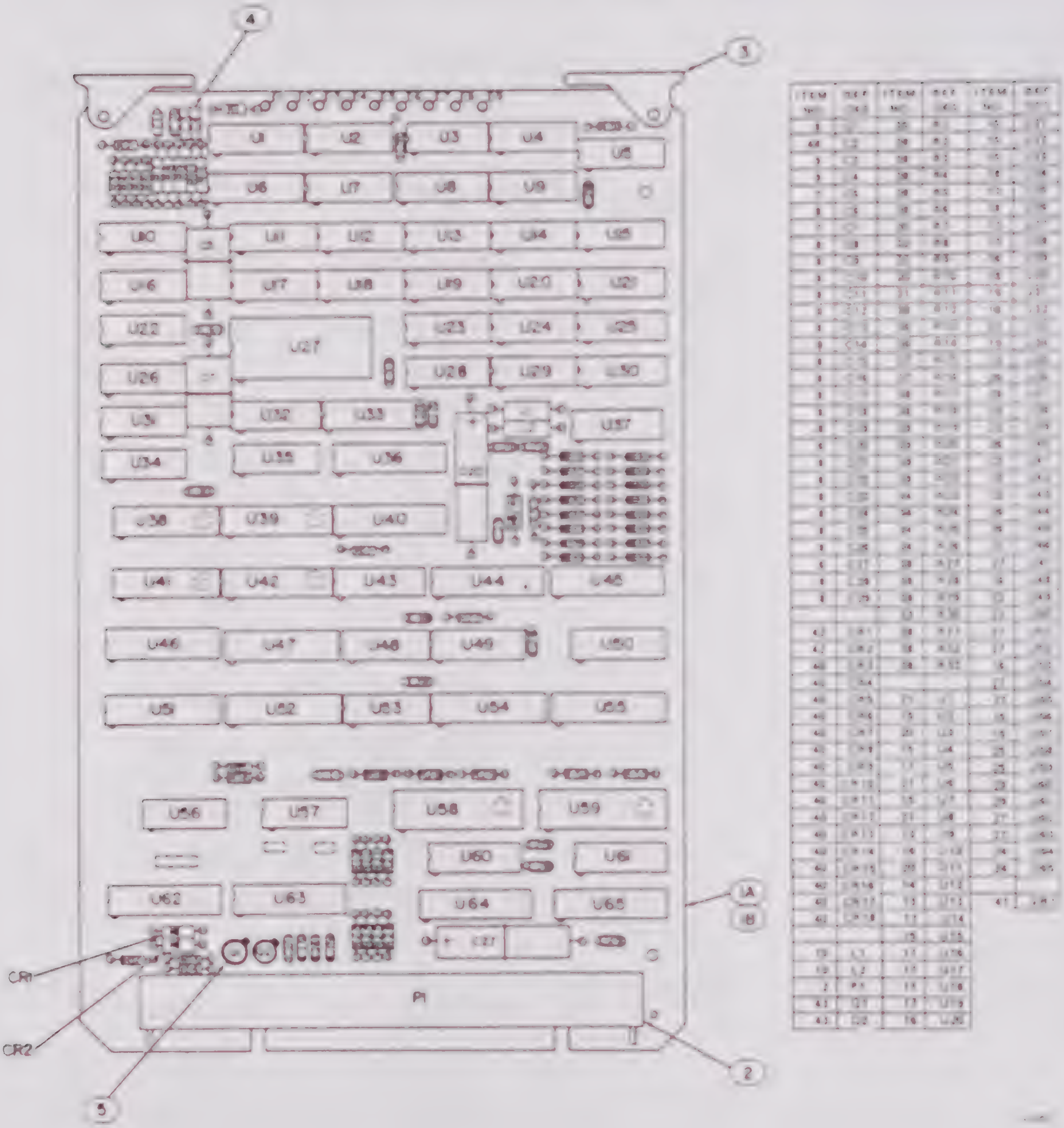

Scratch Pad/Cal Memory Circuit Card Assembly
Figure 5-23

FIG. ITEM		PART NUMBER	NOMENCLATURE 1234567	EFF CODE	UNITS PER ASSY
23-	1	4047699-901	CIRCUIT CARD ASSEMBLY- SCRATCH PAD/CAL MEMORY (SEE FIG.2 ITEM 14 FOR NHA)		RF
	1A	4047700	.PRINTED WIRING BOARD- SCRATCH PAD AND CAL MEM		1
	1B	1006-5	..TERMINAL (V21355) (SPN 2504814-5)		9
	2	4008387	.CONNECTOR (SEL FR PN 000-403-0166 MADE BY V05041)		1
	3	S203BLACK	.EXTRACTOR (V18677) (SPN 2500397-2)		2
	4	516	.SPACER (V53101) (SPN 2504155-7)		4
	5	10463-1DAP	.PAD (V07047) (SPN 2500185-1)		2
	6	M39018-01-0731	.CAPACITOR,ELECTROLYTIC 22 UF +75% -10% 50 VDCW (SPN 2501212-32)		2
	7	M7-298-136	.CAPACITOR,PLASTIC .82 UF ±10% 100 VDCW (V54904) (SPN 2503771-136)		2
	8	M39014-01-1553	.CAPACITOR,CERAMIC 100,000 UUF ±10% 50 VDCW (SPN 4006200-73)		22
	9	M39014-02-1310	.CAPACITOR,CERAMIC 100,000 UUF ±10% 100 VDCW (SPN 4006200-61)		2
	10	MS75089-23	.COIL (SPN 2504709-49)		2
	11	SN24336J	.INTEGRATED CIRCUIT (V01295) (SPN 4003165-405)		1
	12	SN34251J	.INTEGRATED CIRCUIT (V01295) (SPN 4007152-402)		1
	13	M38510-30301BCX	.MICROCIRCUIT (SPN 4030898-601)		5
	14	M38510-30302BCX	.MICROCIRCUIT (SPN 4030898-602)		1
	15	M38510-30001BCX	.MICROCIRCUIT (SPN 4030899-601)		10
	16	M38510-30003BCX	.MICROCIRCUIT (SPN 4030899-603)		6
	17	M38510-30005BCX	.MICROCIRCUIT (SPN 4030899-605)		5

- ITEM NOT ILLUSTRATED

FIG. ITEM		PART NUMBER	NOMENCLATURE 1234567	EFF CODE	UNITS PER ASSY
23	18	M38510-30007BCX	.MICROCIRCUIT (SPN 4030899-607)		3
	19	M38510-30502BCX	.MICROCIRCUIT (SPN 4031325-602)		1
	20	M38510-30102BCX	.MICROCIRCUIT (SPN 4031662-602)		2
	21	M38510-314018EX	.MICROCIRCUIT (SPN 4032615-601)		1
	22	M38510-30903BEX	.MICROCIRCUIT (SPN 4032616-603)		4
	23	IM7114L2CJN	.MICROCIRCUIT (V32293) (SPN 4034708-14) **STATIC SENSITIVE DEVICE**		4
	24	SNJ54LS373J	.MICROCIRCUIT (V01295) (SPN 4038555-473)		2
	25	ER2055S	.MICROCIRCUIT (V14936) (SPN 4045271-255) **STATIC SENSITIVE DEVICE**		2
	26	SNJ54LS273J	.MICROCIRCUIT,DIGITAL (V01295) (SPN 4045320-473)		4
	27	SNJ54LS244J	.MICROCIRCUIT (V01295) (SPN 4045321-444)		4
	28	316A472	.RESISTOR,NETWORK (V01121) (SPN 4014787-15)		1
	29	316A103	.RESISTOR,NETWORK (V01121) (SPN 4014787-19)		2
	30	NA4-5110PMD	.RESISTOR,FILM 5110 OHMS ±0.5% 1/8 W (V14674) (SPN 2500169-460)		2
	31	NA4-60400PMD	.RESISTOR,FILM 60,400 OHMS ±0.5% 1/8 W (V14674) (SPN 2500169-563)		1
	32	NA4-0-200PMD	.RESISTOR,FILM 0.200 MEGO ±0.5% 1/8 W (V14674) (SPN 2500169-613)		2
	33	RCR07G472JR	.RESISTOR,COMPOSITION 4700 OHMS ±5% 1/4 W (SPN 2500932-65)		1
	34	RCR05G241JS	.RESISTOR,COMPOSITION 240 OHMS ±5% 1/8 W (SPN 4006559-34)		4
	35	RCR05G102JS	.RESISTOR,COMPOSITION 1000 OHMS ±5% 1/8 W (SPN 4006559-49)		1

FIG. ITEM		PART NUMBER	NOMENCLATURE 1234567	EFF CODE	UNITS PER ASSY
23	36	RCR05G112JS	.RESISTOR,COMPOSITION 1100 OHMS ±5% 1/8 W (SPN 4006559-50)		2
	37	RCR05G222JS	.RESISTOR,COMPOSITION 2200 OHMS ±5% 1/8 W (SPN 4006559-57)		2
	38	RCR05G103JS	.RESISTOR,COMPOSITION 10,000 OHMS ±5% 1/8 W (SPN 4006559-73)		14
	39	RCR05G303JS	.RESISTOR,COMPOSITION 30,000 OHMS ±5% 1/8 W (SPN 4006559-84)		4
	40	JAN1N4148-1	.DIODE (SPN 2503517-101)		16
	41	JANTX1N750A	.DIODE (SPN 2503687-505)		1
	42	1N5618	.DIODE (V14099) (SPN 4025887-203)		2
	43	S18429	.TRANSISTOR (V07263) (SPN 2504651-20)		2
	44	M39014-01-1299	.CAPACITOR,CERAMIC 100 UUF ±10% 200 VDCW (SPN 4006200-5)		1

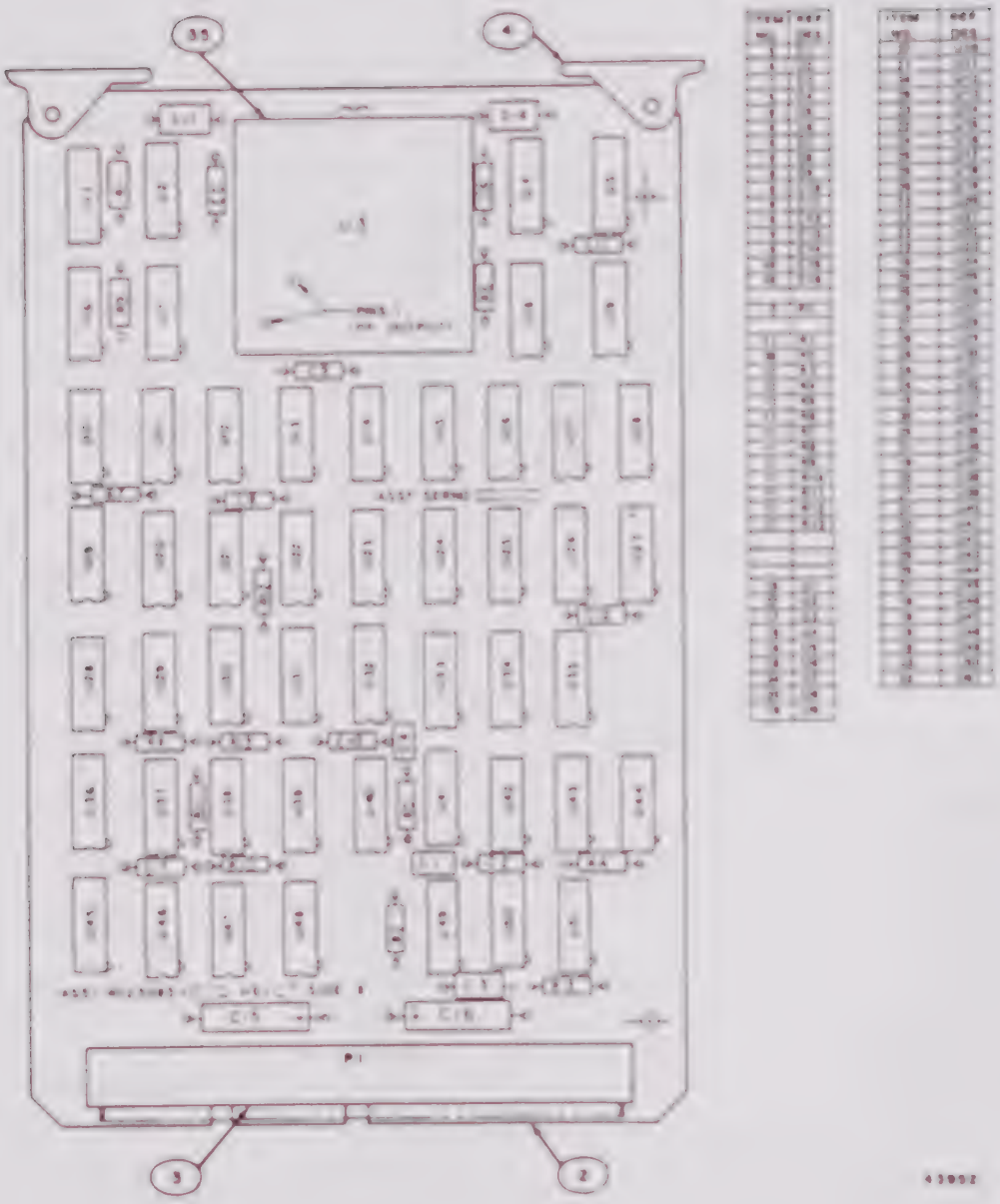

Clock/Freq to Count Circuit Card Assembly
Figure 5-24

FIG. ITEM		PART NUMBER	NOMENCLATURE 1234567	EFF CODE	UNITS PER ASSY
24-	1	4023083-901	CIRCUIT CARD ASSEMBLY- CLOCK/FREQ TO COUNT (SEE FIG.2 ITEM 15 FOR NHA)		RF
	2	4023084	.PRINTED WIRING BOARD- CLOCK AND F/C		1
	3	4008387	.CONNECTOR (SEL FR PN 000-403-0166 MADE BY V05041)		1
	4	S203BLACK	.EXTRACTOR (V18677) (SPN 2500397-2)		2
	5	CK12BX101K	.CAPACITOR,CERAMIC 100 UUF ±10% 100 VDCW (SPN 2501629-13)		2
	6	CK12BX222K	.CAPACITOR,CERAMIC 2200 UUF ±10% 100 VDCW (SPN 2501629-29)		1
	7	CK14BR224K	.CAPACITOR,CERAMIC 220,000 UUF ±10% 50 VDCW (SPN 2501629-65)		1
	8	CK14BR104K	.CAPACITOR,CERAMIC 100,000 UUF ±10% 100 VDCW (SPN 2501629-61)		8
	9	CK12BX103K	.CAPACITOR,CERAMIC 10,000 UUF ±10% 50 VDCW (SPN 2501629-37)		2
	10	CL67BG220MPG	.CAPACITOR,ELECTROLYTIC 22 UF ±20% 25 VDCW (SPN 2503221-24)		2
	11	RCR07G102JR	.RESISTOR,COMPOSITION 1000 OHMS ±5% 1/4 W (SPN 2500932-49)		9
	12	NA4-20000PMD	.RESISTOR,FILM 20,000 OHMS ±.1% 1/8 W (V14674) (SPN 2500169-517)		2
	13	NA4-4990PMD	.RESISTOR,FILM 4990 OHMS ±.1% 1/8 W (V14674) (SPN 2500169-459)		1
	15	SN54393J	.MICROCIRCUIT (V01295) (SPN 4023098-493)		3
	16	SN54197J	.MICROCIRCUIT (V01295) (SPN 4023751-497)		2
	17	970-3575-0	.OSCILLATOR (V75378) (SPN 4023091)		1

- ITEM NOT ILLUSTRATED

FIG. ITEM		PART NUMBER	NOMENCLATURE 1234567	EFF CODE	UNITS PER ASSY
24	18	CL632F	.MICROCIRCUIT (V18324) (SPN 4011305-410)		1
	19	SN23808J	.INTEGRATED CIRCUIT (V01295) (SPN 4003165-404)		7
	20	SN54H74J	.MICROCIRCUIT (V01295) (SPN 4023096-474)		1
	21	SN54H103J00	.MICROCIRCUIT (V01295) (SPN 4023093-403)		1
	22	SN23805J	.INTEGRATED CIRCUIT (V01295) (SPN 4003165-400)		2
	23	SN54293J00	.MICROCIRCUIT (V01295) (SPN 4023094-493)		5
	24	SN54132J00	.MICROCIRCUIT (V01295) (SPN 4022628-432)		1
	25	SN23806J	.INTEGRATED CIRCUIT (V01295) (SPN 4003165-402)		8
	26	4017936-457	.MICROCIRCUIT (SEL FR PN DM9322J MADE BY V27014)		4
	27	SN24336J	.INTEGRATED CIRCUIT (V01295) (SPN 4003165-405)		3
	28	SN23810J	.INTEGRATED CIRCUIT (V01295) (SPN 4003165-420)		1
	29	CL630F	.MICROCIRCUIT (V18324) (SPN 4011305-400)		1
	30	SN5427J	.INTEGRATED CIRCUIT (V01295) (SPN 4011575-427)		1
	31	4002669-475	.INTEGRATED CIRCUIT (SEL FR PN SN23799J MADE BY V01295)		2
	32	SN54H05J	.MICROCIRCUIT (V01295) (SPN 4023701-405)		1
	33	SN54123J00	.MICROCIRCUIT (V01295) (SPN 4023097-423)		2
	34	CL631F	.MICROCIRCUIT (V18324) (SPN 4011305-404)		2
	35	512	.SPACER (V53101) (SPN 2504155-3)		5
	37	SN74S197N	.MICROCIRCUIT (V01295) (SPN 4026054-497)		2
	38	NA4-7150PMD	.RESISTOR,FILM 7150 OHMS ±0.5% 1/8 W (V14674) (SPN 2500169-474)		1

This page was intentionally left blank.

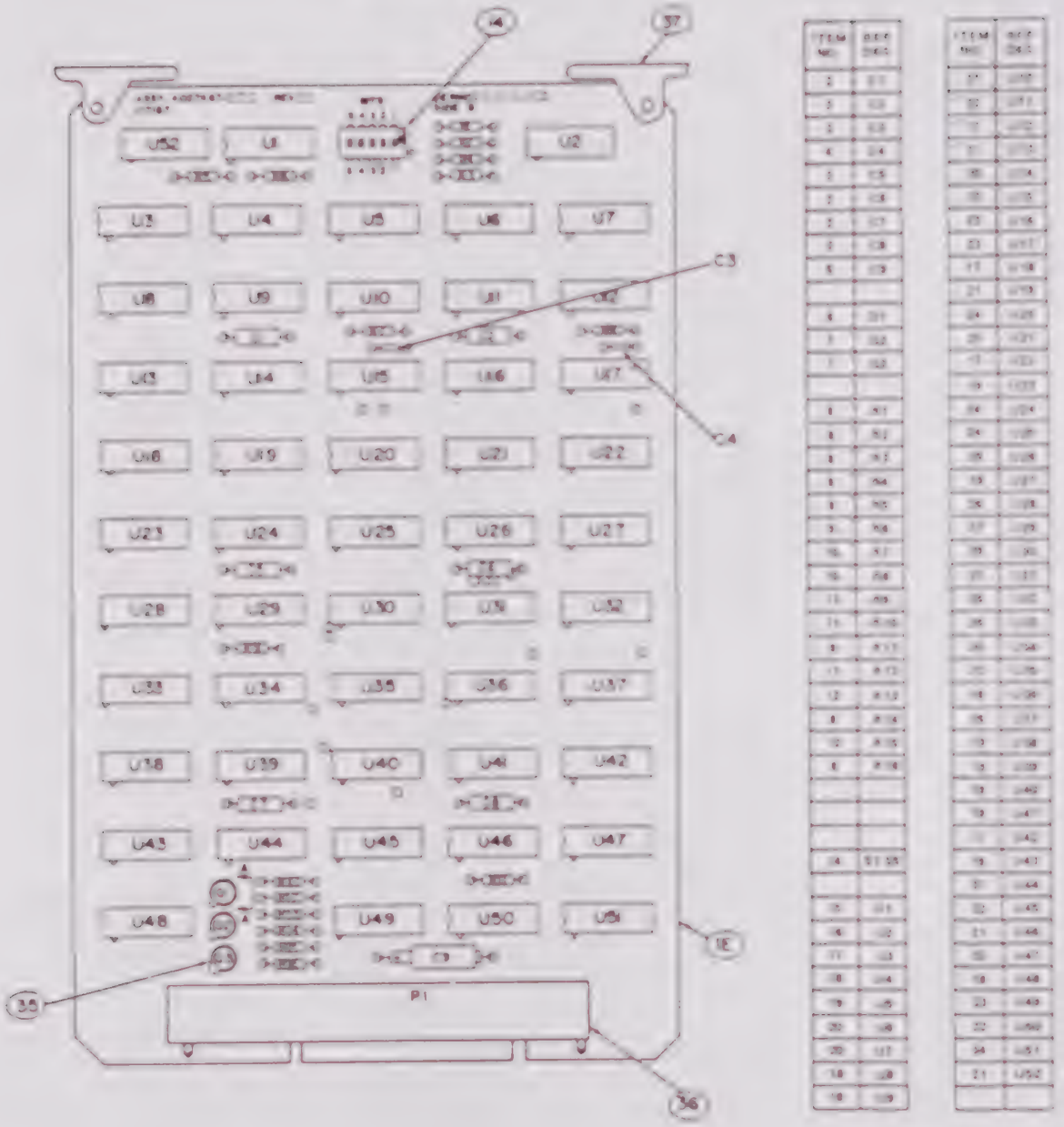

ASCII Interface Option
Figure 5-25

FIG. ITEM	PART NUMBER	NOMENCLATURE 1234567	EFF CODE	UNITS PER ASSY
25- 1	4027467-901	.CIRCUIT CARD ASSEMBLY- ECA ASCII INTERFACE		1
1A	4027468	..PRINTED WIRING BOARD- ASCII INTERFACE		1
2	CK14BR104K	..CAPACITOR,CERAMIC 100,000 UUF ±10% 100 VDCW (SPN 2501629-61)		6
3	CK13BX103K	..CAPACITOR,CERAMIC 10,000 UUF ±10% 100 VDCW (SPN 2501629-41)		1
4	CK12BX101K	..CAPACITOR,CERAMIC 100 UUF ±10% 100 VDCW (SPN 2501629-13)		1
5	CL67BG100MPG	..CAPACITOR,ELECTROLYTIC 10 UF ±20% 25 VDCW (SPN 2503221-23)		1
6	2N2907A	..TRANSISTOR (V49956) (SPN 2504649-2)		1
7	2N2222A	..TRANSISTOR (V07263) (SPN 4002240-202)		2
8	RCR07G102JR	..RESISTOR,COMPOSITION 1000 OHMS ±5% 1/4 W (SPN 2500932-49)		8
9	RCR07G202JR	..RESISTOR,COMPOSITION 2000 OHMS ±5% 1/4 W (SPN 2500932-56)		1
10	RCR07G472JR	..RESISTOR,COMPOSITION 4700 OHMS ±5% 1/4 W (SPN 2500932-65)		2
11	RCR07G222JR	..RESISTOR,COMPOSITION 2200 OHMS ±5% 1/4 W (SPN 2500932-57)		3
12	RCR07G391JR	..RESISTOR,COMPOSITION 390 OHMS ±5% 1/4 W (SPN 2500932-39)		2
14	CTS206-005	..SWITCH,SLIDE,MULI-POLE (V11237) (SPN 4021678-5)		1

- ITEM NOT ILLUSTRATED

FIG. ITEM		PART NUMBER	NOMENCLATURE 1234567	EFF CODE	UNITS PER ASSY
25	15	4017938-485	..MICROCIRCUIT (SEL FR PN SN48282J MADE BY V01295)		1
	16	4002668-486	..INTEGRATED CIRCUIT (SEL FR PN SN23800 MADE BY V01295)		1
	17	SN23805J	..INTEGRATED CIRCUIT (V01295) (SPN 4003165-400)		5
	18	SN5427J	..MICROCIRCUIT (V01295) (SPN 4023702-427)		5
	19	SN23808J	..INTEGRATED CIRCUIT (V01295) (SPN 4003165-404)		8
	20	SN23806J	..INTEGRATED CIRCUIT (V01295) (SPN 4003165-402)		6
	21	SN23809J	..INTEGRATED CIRCUIT (V01295) (SPN 4003165-410)		4
	22	4003485-474	..MICROCIRCUIT (SEL FR PN SN33250 MADE BY V01295)		3
	23	SN24772	..INTEGRATED CIRCUIT (V01295) (SPN 4006195-421)		2
	24	4002669-475	..INTEGRATED CIRCUIT (SEL FR PN SN23799J MADE BY V01295)		3
	25	SD20218	..ELECTRONIC SWITCH (V27014) (SPN 2501402-409)		1
	26	27502ADM	..MICROCIRCUIT (V34335) (SPN 4021563-460)		4
	27	4017936-457	..MICROCIRCUIT (SEL FR PN DM9322J MADE BY V27014)		2
	29	314A102	..RESISTOR,NETWORK 1000 OHMS ±2% .1 W (V01121) (SPN 4014785-10)		1
	30	4003486-407	..INTEGRATED CIRCUIT (SEL FR PN MADE BY V01295)		1
	31	SD70578	..INTEGRATED CIRCUIT (V27014) (SPN 4016987-438)		2
	32	316A332	..RESISTOR,NETWORK (V01121) (SPN 4014787-14)		1
	33	316A682	..RESISTOR,NETWORK (V01121) (SPN 4014787-18)		1

FIG. ITEM		PART NUMBER	1234567 NOMENCLATURE	EFF CODE	UNITS PER ASSY
25	34	SN24336J	..INTEGRATED CIRCUIT (V01295) (SPN 4003165-405)		1
	35	10463-1DAP	..PAD (V07047) (SPN 2500185-1)		3
	36	000403-0100	..CONNECTOR (V05041) (SPN 4004551)		1
	37	S203BLACK	..EXTRACTOR (V18677) (SPN 2500397-2)		2

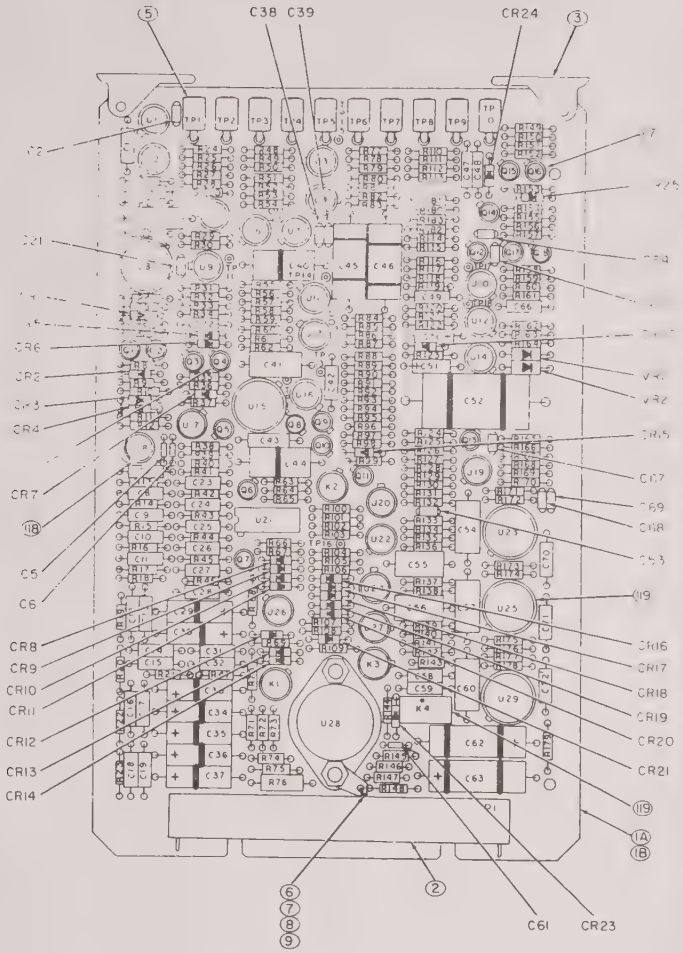

ITEM NO	REF DES	ITEM NO	REF DES	ITEM NO	REF DES	ITEM NO	REF DES	ITEM NO	REF DES	ITEM NO	REF DES	ITEM NO	REF DES	ITEM NO	REF DES
18	C1	13	C46	46	CR18	71	R11	97	R56	73	R101	110	R145	5	TP6
24	C2	19	C47	46	CR19	81	R12	92	R57	71	R102	112	R146	5	TP7
18	C3	19	C48	46	[illegible]	101	R13	87	R58	73	R103	112	R147	5	TP8
10	C4	18	C49	46	CR21	101	R14	96	R59	60	R104	63	R148	5	TP9
15	C5	22	C50	46	CR22	101	R15	93	R60	71	R105	77	R149	5	TP10
13	C6	23	C51	46	CR23	101	R16	98	R61	71	R106	77	R150		
14	C7	28	C52	46	CR24	101	R17	98	R62	91	R107	83	R151	29	U1
8	C8	24	C53	46	CR25	1	R18	100	R63	91	R108	83	R152	29	U2
16	C9	11	C54			101	R19	107	R64	78	R109	98	R153	35	U3
18	C10	4	C55	50	K1	101	R20	106	R65	77	R110	87	R154	29	U4
18	C11	4	C56	50	K2	103	R21	107	R66	77	R111	74	R155	29	U5
18	C12	11	C57	51	K3	101	R22	106	R67	83	R112	87	R156	29	U6
12	C13	13	C58	50	K4	101	R23	116	R68	83	R113	98	R157	33	U7
18	C14	18	C59			73	R24	78	R69	87	R114	73	R158	34	U8
18	C15	11	C60			2	R25	1	R70	87	R115	73	R159	29	U9
12	C16	11	C61			101	R26	114	R71	98	R116	73	R160	29	U10
18	C17	3	CR1	44	J1	3	R27	1	R72	98	R117	73	R161	29	U11
18	C18	27	C63	44	J2	22	R28	111	R73	73	R118	71	R162	29	U12
18	C19	24	C64	41	J3	89	R29	110	R74	102	R119	73	R163	33	U13
17	C20	24	C65	39	J4	25	R30	65	R75	73	R120	115	R164	29	U14
24	C21	18	C66	42	J5	84	R31	114	R76	73	R121	79	R165	34	U15
13	C22	24	C67	42	J6	93	R32	73	R77	87	R122	115	R166	29	U16
18	C23	24	C68	42	J7	88	R33	78	R78	87	R123	115	R167	31	U17
18	C24	24	C69	40	J8	71	R34	90	R79	58	R124	98	R168	29	U18
8	C25	18	C70	40	J9	65	R35	115	R80	59	R125	87	R169	35	U19
18	C26	18	C71	44	Q10	71	R36	115	R81	85	R126	87	R170	29	U20
18	C27	18	C72	45	Q11	105	R37	70	R82	98	R127	55	R171	36	U21
18	C28			40	Q12	73	R38	71	R83	57	R128	86	R172	35	U22
16	C29	46	CR1	43	Q13	81	R39	115	R84	67	R129	56	R173	34	U23
6	C30	46	CR2	47	Q14	75	R40	115	R85	91	R130	67	R174	30	U24
18	C31	46	CR3	40	J15	101	R41	87	R86	61	R131	55	R175	34	U25
18	C32	46	CR4	45	Q16	101	R42	87	R87	80	R132	54	R176	29	U26
26	C33	46	CR5	40	Q17	101	R43	69	R88	99	R133	82	R177	30	U27
26	C34	46	CR6	40	Q18	101	R44	69	R89	115	R134	66	R178	37	U28
26	C35	46	CR7			101	R45	87	R90	115	R135	62	R179	34	U29
26	C36	46	CR8	115	R1	101	R46	87	R91	99	R136	73	R180		
26	C37	46	CR9	61	R2	101	R47	83	R92	68	R137	71	R181	47	VR1
24	C38	49	CR10	73	R3	73	R48	83	R93	86	R138	73	R182	48	VR2
24	C39	49	CR11	68	R4	115	R49	83	R94	71	R139	71	R183		
20	C40	49	CR12	104	R5	74	R50	83	R95	68	R140				
11	C41	49	CR13	105	R6	73	R51	77	R96	86	R141	5	TP1		
18	C42	46	CR14	108	R7	68	R52	77	R97	71	R142	5	TP2		
25	C43	46	CR15	104	R8	94	R53	83	R98	111	R143	5	TP3		
12	C44	46	CR16	103	R9	89	R54	102	R99	71	R144	5	TP4		
13	C45	46	CR17	71	R10	95	R55	77	R100			5	TP5		

43954

PT Inner Loop Board Circuit Card Assembly
Figure 5-26

FIG. ITEM		PART NUMBER	NOMENCLATURE 1234567	EFF CODE	UNITS PER ASSY
26-	1	4047705-901	CIRCUIT CARD ASSEMBLY- PT INNER LOOP BOARD (SEE FIG.2 ITEM 16 FOR NHA)		RF
	1A	4047706	.PRINTED WIRING BOARD		1
	1B	1006-5	..TERMINAL (V21355) (SPN 2504814-5)		8
	2	000403-0100	.CONNECTOR (V05041) (SPN 4004551)		1
	3	S203BLACK	.EXTRACTOR (V18677) (SPN 2500397-2)		2
	4	CK15BR474K	.CAPACITOR,CERAMIC 470,000 UUF ±10% 50 VDCW (SPN 2501629-74)		2
	5	026-4005-000342	.JACK (V98291) (SPN 4018679-2)		10
	6	4009638-6	.SCREW,EXTERNALLY RELIEVED BODY HEX CRES 6-32X7-16		2
	7	MS21042L06	.NUT SLFLKG HEX STL 6-32 (SPN 2500929-3)		2
	8	MS35431-3	.TERMINAL (SPN 092-3)		1
	9	NAS620C6L	.WASHER,FLAT CRES 0.143 ID (SPN 2504638-9)		2
	10	SP7-334-9-5	.CAPACITOR,PLASTIC 0.330 UF ±10% 50 VDCW (V84411) (SPN 2500652-31)		1
	11	SP7-474-9-5	.CAPACITOR,PLASTIC 0.470 UF ±10% 50 VDCW (V84411) (SPN 2500652-33)		4
	12	SP7-105-1-5	.CAPACITOR,PLASTIC 1 UF ±1% 50 VDCW (V84411) (SPN 2501315-37)		1
	13	SP7-205-1-5	.CAPACITOR,PLASTIC 2 UF ±1% 50 VDCW (V84411) (SPN 2501315-41)		2
	14	CK12BX221K	.CAPACITOR,CERAMIC 220 UUF,±10% 100 VDCW (SPN 2501629-17)		1
	15	CK12BX102K	.CAPACITOR,CERAMIC 1000 UUF ±10% 100 VDCW (SPN 2501629-25)		1

- ITEM NOT ILLUSTRATED

FIG. ITEM	PART NUMBER	NOMENCLATURE 1234567	EFF CODE	UNITS PER ASSY
26 16	CK12BX332K	.CAPACITOR,CERAMIC 3300 UUF ±10% 100 VDCW (SPN 2501629-31)		1
17	CK13BX103K	.CAPACITOR,CERAMIC 10,000 UUF ±10% 100 VDCW (SPN 2501629-41)		1
18	CK14BR104K	.CAPACITOR,CERAMIC 100,000 UUF ±10% 100 VDCW (SPN 2501629-61)		31
19	M39014-02-1415	.CAPACITOR,CERAMIC 1,000,000 UUF ±10% 50 VDCW (SPN 4006200-85)		2
20	CK16BR474K	.CAPACITOR,CERAMIC 470,000 UUF ±10% 100 VDCW (SPN 2501629-76)		1
21	M7-298-116	.CAPACITOR,PLASTIC 0.033 UF ±10% 100 VDCW (V54904) (SPN 2503771-116)		1
22	TNS105X075KI	.CAPACITOR,ELECTROLYTIC 1 UF ±10% 75 VDCW (V26769) (SPN 2504225-95)		1
23	TNS106X020KI	.CAPACITOR,ELECTROLYTIC 10 UF ±10% 20 VDCW (V26769) (SPN 2504225-147)		1
24	M39014-01-1553	.CAPACITOR,CERAMIC 100,000 UUF ±10% 50 VDCW (SPN 4006200-73)		10
25	4012993-242	.CAPACITOR,CERAMIC 5100 UUF ±3% 50 VDCW		1
26	CL67BG220MPG	.CAPACITOR,ELECTROLYTIC 22 UF ±20% 25 VDCW (SPN 4026910-24)		7
27	CL67BG181MPG	.CAPACITOR,ELECTROLYTIC 180 UF ±20% 25 VDCW (SPN 4026910-26)		2
28	W650B1A106F	.CAPACITOR,PLASTIC 10 UF ±1% 50 VDCW (V14752) (SPN 4026911-2)		1
29	2501375-341	.MICROCIRCUIT (SEL FR PN SL20312 MADE BY V07263)		14
30	LM111H	.MICROCIRCUIT (V27014) (SPN 4009281-311)		2

FIG. ITEM		PART NUMBER	NOMENCLATURE 1234567	EFF CODE	UNITS PER ASSY
26	31	SL20447	.INTEGRATED CIRCUIT (V27014) (SPN 4010430-325)		1
	33	4213SM	.MICROCIRCUIT (V13919) (SPN 4015749-313)		2
	34	LH0023CG	.MICROCIRCUIT (V27014) (SPN 4022353-323)		5
	35	4024991-341	.MICROCIRCUIT (SEL FR PN 131901 MADE BY V29832)		3
	36	SN5433J	.MICROCIRCUIT (V01295) (SPN 4025243-433)		1
	37	SH76296	.MICROCIRCUIT (V27014) (SPN 4032785-421)		1
	39	MU270	.TRANSISTOR (V17856) (SPN 2500426-2) **STATIC SENSITIVE DEVICE**		1
	40	JAN2N4860	.TRANSISTOR (SPN 2501502-141)		6
	41	JAN2N4858	.TRANSISTOR (SPN 2501502-160)		1
	42	2N2907A	.TRANSISTOR (V49956) (SPN 2504649-2)		3
	43	JAN2N718A	.TRANSISTOR (SPN 2504651-10)		1
	44	2N2222A	.TRANSISTOR (V07263) (SPN 4002240-202)		3
	45	JAN2N2946A	.TRANSISTOR (SPN 4002246-101)		3
	46	JAN1N4148-1	.DIODE (SPN 2503517-101)		21
	47	E2645-2	.DIODE (V01295) (SPN 2503687-207)		1
	48	1N823	.DIODE (V12954) (SPN 2503799-202)		1
	49	4030058-201	.DIODE		4
	50	M39016-9-024L	.RELAY (SPN 4006785-30)		2
	51	M39016-9-052L	.RELAY (SPN 4006785-52)		1
	52	M39016-13-082L	.RELAY (SPN 4040876-10)		1
	54	NA4-100PMD	.RESISTOR,FILM 100 OHMS ±0.5% 1/8 W (V14674) (SPN 2500169-296)		1

FIG. ITEM	PART NUMBER	NOMENCLATURE 1234567	EFF CODE	UNITS PER ASSY
26 55	NA4-200PMD	.RESISTOR,FILM 200 OHMS ±0.5% 1/8 W (V14674) (SPN 2500169-325)		2
56	NA4-255PMD	.RESISTOR,FILM 255 OHMS ±0.5% 1/8 W (V14674) (SPN 2500169-335)		1
57	NA4-549PMD	.RESISTOR,FILM 549 OHMS ±0.5% 1/8 W (V14674) (SPN 2500169-367)		1
58	NA4-750PMD	.RESISTOR,FILM 750 OHMS ±0.5% 1/8 W (V14674) (SPN 2500169-380)		1
59	NA4-909PMD	.RESISTOR,FILM 909 OHMS ±0.5% 1/8 W (V14674) (SPN 2500169-388)		1
60	NA4-1000PMD	.RESISTOR,FILM 1000 OHMS ±0.5% 1/8 W (V14674) (SPN 2500169-392)		1
61	NA4-2000PMD	.RESISTOR,FILM 2000 OHMS ±0.5% 1/8 W (V14674) (SPN 2500169-421)		2
62	NA4-2210PMD	.RESISTOR,FILM 2210 OHMS ±0.5% 1/8 W (V14674) (SPN 2500169-425)		1
63	NA4-2430PMD	.RESISTOR,FILM 2430 OHMS ±0.5% 1/8 W (V14674) (SPN 2500169-429)		1
64	NA4-3090PMD	.RESISTOR,FILM 3090 OHMS ±0.5% 1/8 W (V14674) (SPN 2500169-439)		1
65	NA4-3920PMD	.RESISTOR,FILM 3920 OHMS ±0.5% 1/8 W (V14674) (SPN 2500169-449)		1
66	NA4-4530PMD	.RESISTOR,FILM 4530 OHMS ±0.5% 1/8 W (V14674) (SPN 2500169-455)		1
67	NA4-4870PMD	.RESISTOR,FILM 4870 OHMS ±0.5% 1/8 W (V14674) (SPN 2500169-458)		2
68	NA4-4990PMD	.RESISTOR,FILM 4990 OHMS ±.1% 1/8 W (V14674) (SPN 2500169-459)		4

FIG. ITEM	PART NUMBER	NOMENCLATURE 1234567	EFF CODE	UNITS PER ASSY
26 69	NA4-5620PMD	.RESISTOR,FILM 5620 OHMS ±0.5% 1/8 W (V14674) (SPN 2500169-464)		2
70	NA4-9090PMD	.RESISTOR,FILM 9090 OHMS ±0.5% 1/8 W (V14674) (SPN 2500169-484)		1
71	NA4-10000PMD	.RESISTOR,FILM 10,000 OHMS ±0.5% 1/8 W (V14674) (SPN 2500169-488)		16
72	NA4-10500PMD	.RESISTOR,FILM 10,500 OHMS ±0.5% 1/8 W (V14674) (SPN 2500169-490)		1
73	NA4-20000PMD	.RESISTOR,FILM 20,000 OHMS ±.1% 1/8 W (V14674) (SPN 2500169-517)		22
74	NA4-23200PMD	.RESISTOR,FILM 23,200 OHMS ±0.5% 1/8 W (V14674) (SPN 2500169-523)		1
75	NA4-24300PMD	.RESISTOR,FILM 24,300 OHMS ±0.5% 1/8 W (V14674) (SPN 2500169-525)		1
76	NA4-25500PMD	.RESISTOR,FILM 25,500 OHMS ±0.5% 1/8 W (V14674) (SPN 2500169-527)		1
77	NA4-5110PMD	.RESISTOR,FILM 5110 OHMS ±0.5% 1/8 W (V14674) (SPN 2500169-460)		7
78	NA4-33200PMD	.RESISTOR,FILM 33,200 OHMS ±0.5% 1/8 W (V14674) (SPN 2500169-538)		2
79	NA4-36500PMD	.RESISTOR,FILM 36,500 OHMS ±0.5% 1/8 W (V14674) (SPN 2500169-542)		1
80	NA4-38300PMD	.RESISTOR,FILM 38,300 OHMS ±0.5% 1/8 W (V14674) (SPN 2500169-544)		1
81	NA4-40200PMD	.RESISTOR,FILM 40,200 OHMS ±0.5% 1/8 W (V14674) (SPN 2500169-546)		2
82	NA4-47500PMD	.RESISTOR,FILM 47,500 OHMS ±0.5% 1/8 W (V14674) (SPN 2500169-553)		1

FIG. ITEM		PART NUMBER	NOMENCLATURE 1234567	EFF CODE	UNITS PER ASSY
26	83	NA4-49900PMD	.RESISTOR,FILM 49,900 OHMS ±0.5% 1/8 W (V14674) (SPN 2500169-555)		12
	84	NA4-66500PMD	.RESISTOR,FILM 66,500 OHMS ±0.5% 1/8 W (V14674) (SPN 2500169-567)		1
	85	NA4-68100PMD	.RESISTOR,FILM 68,100 OHMS ±0.5% 1/8 W (V14674) (SPN 2500169-568)		1
	86	NA4-95300PMD	.RESISTOR,FILM 95,300 OHMS ±0.5% 1/8 W (V14674) (SPN 2500169-582)		3
	87	NA4-0-100PMD	.RESISTOR,FILM 0.100 MEGO ±0.5% 1/8 W (V14674) (SPN 2500169-584)		18
	88	NA4-0-121PMD	.RESISTOR,FILM 0.121 MEGO ±0.5% 1/8 W (V14674) (SPN 2500169-592)		1
	89	NA4-0-150PMD	.RESISTOR,FILM 0.150 MEGO ±0.5% 1/8 W (V14674) (SPN 2500169-601)		4
	90	NA4-0-165PMD	.RESISTOR,FILM 0.165 MEGO ±0.5% 1/8 W (V14674) (SPN 2500169-605)		1
	91	NA4-0-200PMD	.RESISTOR,FILM 0.200 MEGO ±0.5% 1/8 W (V14674) (SPN 2500169-613)		3
	92	NA4-0-221PMD	.RESISTOR,FILM 0.221 MEGO ±0.5% 1/8 W (V14674) (SPN 2500169-617)		1
	93	NA4-0-261PMD	.RESISTOR,FILM 0.261 MEGO ±0.5% 1/8 W (V14674) (SPN 2500169-624)		1
	94	NA4-0-402PMD	.RESISTOR,FILM 0.402 MEGO ±0.5% 1/8 W (V14674) (SPN 2500169-642)		1
	95	NA4-0-412PMD	.RESISTOR,FILM 0.412 MEGO ±0.5% 1/8 W (V14674) (SPN 2500169-643)		1
	96	NA4-0-442PMD	.RESISTOR,FILM 0.442 MEGO ±0.5% 1/8 W (V14674) (SPN 2500169-646)		1

FIG. ITEM	PART NUMBER	NOMENCLATURE 1234567	EFF CODE	UNITS PER ASSY
26 97	NA4-0-487PMD	.RESISTOR,FILM 0.487 MEGO ±0.5% 1/8 W (V14674) (SPN 2500169-650)		1
98	NA4-0-499PMD	.RESISTOR,FILM 0.499 MEGO ±0.5% 1/8 W (V14674) (SPN 2500169-651)		8
99	GE10-1	.RESISTOR,FILM 1 MEGO ±2% 1/8 W (V80031) (SPN 2500482-1)		2
100	RCR07G220JR	.RESISTOR,COMPOSITION 22 OHMS ±5% 1/4 W (SPN 2500932-9)		1
101	RCR07G510JR	.RESISTOR,COMPOSITION 51 OHMS ±5% 1/4 W (SPN 2500932-18)		18
102	RCR07G101JR	.RESISTOR,COMPOSITION 100 OHMS ±5% 1/4 W (SPN 2500932-25)		2
103	RCR07G102JR	.RESISTOR,COMPOSITION 1000 OHMS ±5% 1/4 W (SPN 2500932-49)		2
104	RCR07G122JR	.RESISTOR,COMPOSITION 1200 OHMS ±5% 1/4 W (SPN 2500932-51)		2
105	RCR07G152JR	.RESISTOR,COMPOSITION 1500 OHMS ±5% 1/4 W (SPN 2500932-53)		1
106	RCR07G472JR	.RESISTOR,COMPOSITION 4700 OHMS ±5% 1/4 W (SPN 2500932-65)		2
107	RCR07G622JR	.RESISTOR,COMPOSITION 6200 OHMS ±5% 1/4 W (SPN 2500932-68)		2
108	RCR07G103JR	.RESISTOR,COMPOSITION 10,000 OHMS ±5% 1/4 W (SPN 2500932-73)		1
110	RW81U1R00F	.RESISTOR,WIREWOUND 1 OHMS ±1% 1 W (SPN 2501300-25)		2
111	RW81U1R30F	.RESISTOR,WIREWOUND 1.3 OHMS ±1% 1 W (SPN 2501300-28)		2

FIG. ITEM	PART NUMBER	NOMENCLATURE 1234567	EFF CODE	UNITS PER ASSY
26 112	RWR1U4R3DF	.RESISTOR,WIREWOUND 4.3 OHMS ±1% 1 W (SPN 2501300-40)		2
113	RWR1U20RDF	.RESISTOR,WIREWOUND 20 OHMS ±1% 1 W (SPN 2501300-56)		2
114	RLR20C1201GR	.RESISTOR,FILM 1200 OHMS ±2% 1/2 W (SPN 2501470-51)		1
115	4014168-909	.RESISTOR ASSORTMENT (SELECT A RESISTANCE VALUE FROM 10 OHMS THRU .499 MEGOHMS AS SPN 2500169-200 THRU 2500169-651 AND 0.51 MEGOHMS THRU 22.0 MEGOHMS AS SPN 2500932-114 THRU 2500932-153)		11
116	NA4-0-332PMD	.RESISTOR,FILM 0.332 MEGO ±0.5% 1/8 W (V14674) (SPN 2500169-634)		1
117	10463-1DAP	.PAD (V07047) (SPN 2500185-1)		18
118	10462-1DAP	.PAD (V07047) (SPN 2500185)		25
119	516	.SPACER (V53101) (SPN 2504155-7)		24

ITEM NO	REF DES	ITEM NO	REF DES
19	C1	46	CR1
25	C2	46	CR2
18	C3	46	CR3
10	C4	46	CR4
15	C5	46	CR5
14	C6	46	CR6
19	C7	46	CR7
19	C8	46	CR8
19	C9	46	CR9
19	C10	49	CR10
19	C11	49	CR11
19	C12	49	CR12
19	C13	49	CR13
19	C14	46	CR14
19	C15	46	CR15
19	C16	46	CR16
19	C17	46	CR17
19	C18	46	CR18
19	C19	46	CR19
17	C20	46	CR20
25	C21	46	CR21
22	C22	46	CR22
19	C23	46	CR23
19	C24	46	CR24
19	C25	46	CR25
19	C26		
19	C27		J1
19	C28		
27	C29	50	K1
27	C30	50	K2
19	C31	51	K3
19	C32	52	K4
27	C33		
27	C34	44	Q1
27	C35	44	Q2
27	C36	41	Q3
27	C37	39	Q4
25	C38	42	Q5
25	C39	42	Q6
21	C40	42	Q7
11	C41	40	Q8
19	C42	40	Q9
26	C43	44	Q10
12	C44	45	Q11
13	C45	40	Q12
13	C46	43	Q13
20	C47	45	Q14
20	C48	40	Q15
19	C49	45	Q16
23	C50	40	Q17
24	C51	40	Q18
29	C52		
25	C53	117	R1
11	C54	62	R2
4	C55	75	R3
4	C56	70	R4
11	C57	106	R5
19	C58	107	R6
19	C59	110	R7
11	C60	106	R8
16	C61	105	R9
28	C62	72	R10
28	C63	72	R11
25	C64	84	R12
25	C65	103	R13
19	C66	103	R14
25	C67	103	R15
25	C68	103	R16
25	C69	103	R17
19	C70	103	R18
19	C71	103	R19
19	C72	103	R20

ITEM NO	REF DES	ITEM NO	REF DES
103	R21	86	R93
103	R22	86	R94
103	R23	86	R95
75	R24	111	R96
72	R25	111	R97
75	R26	86	R98
77	R27	104	R99
73	R28	111	R100
91	R29	75	R101
80	R30	72	R102
89	R31	75	R103
86	R32	61	R104
90	R33	72	R105
72	R34	72	R106
68	R35	93	R107
72	R36	93	R108
105	R37	82	R109
75	R38	111	R110
84	R39	111	R111
75	R40	86	R112
103	R41	86	R113
103	R42	89	R114
103	R43	89	R115
103	R44	100	R116
103	R45	100	R117
103	R46	75	R118
103	R47	104	R119
75	R48	75	R120
117	R49	75	R121
76	R50	89	R122
75	R51	89	R123
70	R52	58	R124
96	R53	60	R125
122	R54	87	R126
97	R55	100	R127
99	R56	57	R128
94	R57	69	R129
89	R58	93	R130
98	R59	62	R131
95	R60	79	R132
100	R61	101	R133
100	R62	117	R134
102	R63	117	R135
109	R64	101	R136
108	R65	70	R137
109	R66	88	R138
108	R67	72	R139
118	R68	70	R140
82	R69	88	R141
72	R70	72	R142
115	R71	113	R143
115	R72	72	R144
113	R73	112	R145
112	R74	114	R146
67	R75	114	R147
116	R76	64	R148
75	R77	111	R149
78	R78	111	R150
92	R79	86	R151
117	R80	86	R152
117	R81	100	R153
71	R82	89	R154
72	R83	75	R155
117	R84	89	R156
117	R85	100	R157
86	R86	75	R158
86	R87	75	R159
66	R88	75	R160
66	R89	75	R161
86	R90	72	R162
86	R91	75	R163
86	R92	117	R164

ITEM NO	REF DES
83	R165
117	R166
117	R167
100	R168
89	R169
89	R170
56	R171
85	R172
69	R173
74	R174
55	R175
54	R176
81	R177
65	R178
63	R179
75	R180
72	R181
75	R182
72	R183
30	U1
30	U2
35	U3
30	U4
30	U5
30	U6
33	U7
34	U8
30	U9
30	U10
30	U11
30	U12
33	U13
30	U14
34	U15
30	U16
32	U17
30	U18
35	U19
30	U20
36	U21
35	U22
34	U23
31	U24
34	U25
30	U26
31	U27
37	U28
34	U29
47	VR1
48	VR2

43955

PS Inner Loop Board Circuit Card Assembly
Figure 5-27

FIG. ITEM	PART NUMBER	NOMENCLATURE 1234567	EFF CODE	UNITS PER ASSY
27- 1	4047707-901	CIRCUIT CARD ASSEMBLY- PS INNER LOOP BOARD		RF
1A	4047708	.PRINTED WIRING BOARD- PS INNER LOOP BOARD		1
1B	1006-5	..TERMINAL (V21355) (SPN 2504814-5)		8
2	000403-0100	.CONNECTOR (V05041) (SPN 4004551)		1
3	S203BLACK	.EXTRACTOR (V18677) (SPN 2500397-2)		2
4	CK15BR474K	.CAPACITOR,CERAMIC 470,000 UUF ±10% 50 VDCW (SPN 2501629-74)		2
5	026-4005-000342	.JACK,TIP (V98291) (SPN 4018679-2)		10
6	4009638-6	.SCREW,EXTERNALLY RELIEVED BODY HEX CRES 6-32X7-16		2
7	MS21042L06	.NUT SLFLKG HEX STL 6-32 (SPN 2500929-3)		2
8	MS35431-3	.TERMINAL (SPN 092-3)		1
9	NAS620C6L	.WASHER,FLAT CRES 0.143 ID (SPN 2504638-9)		2
10	SP7-334-9-5	.CAPACITOR,PLASTIC 0.330 UF ±10% 50 VDCW (V84411) (SPN 2500652-31)		1
11	SP7-474-9-5	.CAPACITOR,PLASTIC 0.470 UF ±10% 50 VDCW (V84411) (SPN 2500652-33)		4
12	SP7-105-1-5	.CAPACITOR,PLASTIC 1 UF ±1% 50 VDCW (V84411) (SPN 2501315-37)		1
13	SP7-205-1-5	.CAPACITOR,PLASTIC 2 UF ±1% 50 VDCW (V84411) (SPN 2501315-41)		2
14	CK12BX221K	.CAPACITOR,CERAMIC 220 UUF,±10% 100 VDCW (SPN 2501629-17)		1
15	CK12BX102K	.CAPACITOR,CERAMIC 1000 UUF ±10% 100 VDCW (SPN 2501629-25)		1

- ITEM NOT ILLUSTRATED

FIG. ITEM	PART NUMBER	NOMENCLATURE 1234567	EFF CODE	UNITS PER ASSY
27 16	CK12BX332K	.CAPACITOR,CERAMIC 3300 UUF ±10% 100 VDCW (SPN 2501629-31)		1
17	CK13BX103K	.CAPACITOR,CERAMIC 10,000 UUF ±10% 100 VDCW (SPN 2501629-41)		1
18	CK14BX223K	.CAPACITOR,CERAMIC 22,000 UUF ±10% 100 VDCW (SPN 2501629-53)		1
19	CK14BR104K	.CAPACITOR,CERAMIC 100,000 UUF ±10% 100 VDCW (SPN 2501629-61)		30
20	M39014-02-1415	.CAPACITOR,CERAMIC 1,000,000 UUF ±10% 50 VDCW (SPN 4006200-85)		2
21	CK16BR474K	.CAPACITOR,CERAMIC 470,000 UUF ±10% 100 VDCW (SPN 2501629-76)		1
22	M7-298-116	.CAPACITOR,PLASTIC 0.033 UF ±10% 100 VDCW (V54904) (SPN 2503771-116)		1
23	TNS105X075KI	.CAPACITOR,ELECTROLYTIC 1 UF ±10% 75 VDCW (V26769) (SPN 2504225-95)		1
24	TNS106X020KI	.CAPACITOR,ELECTROLYTIC 10 UF ±10% 20 VDCW (V26769) (SPN 2504225-147)		1
25	M39014-01-1553	.CAPACITOR,CERAMIC 100,000 UUF ±10% 50 VDCW (SPN 4006200-73)		10
26	4012993-242	.CAPACITOR,CERAMIC 5100 UUF ±3% 50 VDCW		1
27	CL67BG220MPG	.CAPACITOR,ELECTROLYTIC 22 UF ±20% 25 VDCW (SPN 4026910-24)		7
28	CL67BG181MPG	.CAPACITOR,ELECTROLYTIC 180 UF ±20% 25 VDCW (SPN 4026910-26)		2
29	W650B1A106F	.CAPACITOR,PLASTIC 10 UF ±1% 50 VDCW (V14752) (SPN 4026911-2)		1
30	2501375-341	.MICROCIRCUIT (SEL FR PN SL20312 MADE BY V07263)		14

FIG.	ITEM	PART NUMBER	NOMENCLATURE 1234567	EFF CODE	UNITS PER ASSY
27	31	LM111H	.MICROCIRCUIT (V27014) (SPN 4009281-311)		2
	32	SL20447	.INTEGRATED CIRCUIT (V27014) (SPN 4010430-325)		1
	33	4213SM	.MICROCIRCUIT (V13919) (SPN 4015749-313)		2
	34	LH0023CG	.MICROCIRCUIT (V27014) (SPN 4022353-323)		5
	35	4024991-341	.MICROCIRCUIT (SEL FR PN 131901 MADE BY V29832)		3
	36	SN5433J	.MICROCIRCUIT (V01295) (SPN 4025243-433)		1
	37	SH76296	.MICROCIRCUIT (V27014) (SPN 4032785-421)		1
	39	MU270	.TRANSISTOR (V17856) (SPN 2500426-2) **STATIC SENSITIVE DEVICE**		1
	40	JAN2N4860	.TRANSISTOR (SPN 2501502-141)		6
	41	JAN2N4858	.TRANSISTOR (SPN 2501502-160)		1
	42	2N2907A	.TRANSISTOR (V49956) (SPN 2504649-2)		3
	43	JAN2N718A	.TRANSISTOR (SPN 2504651-10)		1
	44	2N2222A	.TRANSISTOR (V07263) (SPN 4002240-202)		3
	45	JAN2N2946A	.TRANSISTOR (SPN 4002246-101)		3
	46	JAN1N4148-1	.DIODE (SPN 2503517-101)		21
	47	E2645-2	.DIODE (V01295) (SPN 2503687-207)		1
	48	1N823	.DIODE (V12954) (SPN 2503799-202)		1
	49	4030058-201	.DIODE		4
	50	M39016-9-024L	.RELAY (SPN 4006785-30)		2
	51	M39016-9-052L	.RELAY (SPN 4006785-52)		1
	52	M39016-13-082L	.RELAY (SPN 4040876-10)		1

FIG. ITEM		PART NUMBER	NOMENCLATURE 1234567	EFF CODE	UNITS PER ASSY
27	54	NA4-150PMD	.RESISTOR,FILM 150 OHMS ±0.5% 1/8 W (V14674) (SPN 2500169-313)		1
	55	NA4-200PMD	.RESISTOR,FILM 200 OHMS ±0.5% 1/8 W (V14674) (SPN 2500169-325)		1
	56	NA4-243PMD	.RESISTOR,FILM 243 OHMS ±0.5% 1/8 W (V14674) (SPN 2500169-333)		1
	57	NA4-549PMD	.RESISTOR,FILM 549 OHMS ±0.5% 1/8 W (V14674) (SPN 2500169-367)		1
	58	NA4-750PMD	.RESISTOR,FILM 750 OHMS ±0.5% 1/8 W (V14674) (SPN 2500169-380)		1
	59	NA4-866PMD	.RESISTOR,FILM 866 OHMS ±0.5% 1/8 W (V14674) (SPN 2500169-386)		1
	60	NA4-909PMD	.RESISTOR,FILM 909 OHMS ±0.5% 1/8 W (V14674) (SPN 2500169-388)		1
	61	NA4-1000PMD	.RESISTOR,FILM 1000 OHMS ±0.5% 1/8 W (V14674) (SPN 2500169-392)		1
	62	NA4-2000PMD	.RESISTOR,FILM 2000 OHMS ±0.5% 1/8 W (V14674) (SPN 2500169-421)		2
	63	NA4-2210PMD	.RESISTOR,FILM 2210 OHMS ±0.5% 1/8 W (V14674) (SPN 2500169-425)		1
	64	NA4-2430PMD	.RESISTOR,FILM 2430 OHMS ±0.5% 1/8 W (V14674) (SPN 2500169-429)		1
	65	NA4-2670PMD	.RESISTOR,FILM 2670 OHMS ±0.5% 1/8 W (V14674) (SPN 2500169-433)		1
	66	NA4-2800PMD	.RESISTOR,FILM 2800 OHMS ±0.5% 1/8 W (V14674) (SPN 2500169-435)		2
	67	NA4-3090PMD	.RESISTOR,FILM 3090 OHMS ±0.5% 1/8 W (V14674) (SPN 2500169-439)		1

FIG.	ITEM	PART NUMBER	NOMENCLATURE 1234567	EFF CODE	UNITS PER ASSY
27	68	NA4-3920PMD	.RESISTOR,FILM 3920 OHMS ±0.5% 1/8 W (V14674) (SPN 2500169-449)		1
	69	NA4-4870PMD	.RESISTOR,FILM 4870 OHMS ±0.5% 1/8 W (V14674) (SPN 2500169-458)		1
	70	NA4-4990PMD	.RESISTOR,FILM 4990 OHMS ±.1% 1/8 W (V14674) (SPN 2500169-459)		4
	71	NA4-9090PMD	.RESISTOR,FILM 9090 OHMS ±0.5% 1/8 W (V14674) (SPN 2500169-484)		1
	72	NA4-10000PMD	.RESISTOR,FILM 10,000 OHMS ±0.5% 1/8 W (V14674) (SPN 2500169-488)		16
	73	NA4-10500PMD	.RESISTOR,FILM 10,500 OHMS ±0.5% 1/8 W (V14674) (SPN 2500169-490)		1
	74	NA4-11000PMD	.RESISTOR,FILM 11,000 OHMS ±0.5% 1/8 W (V14674) (SPN 2500169-492)		1
	75	NA4-20000PMD	.RESISTOR,FILM 20,000 OHMS ±.1% 1/8 W (V14674) (SPN 2500169-517)		21
	76	NA4-23200PMD	.RESISTOR,FILM 23,200 OHMS ±0.5% 1/8 W (V14674) (SPN 2500169-523)		1
	77	NA4-23700PMD	.RESISTOR,FILM 23,700 OHMS ±0.5% 1/8 W (V14674) (SPN 2500169-524)		1
	78	NA4-25500PMD	.RESISTOR,FILM 25,500 OHMS ±0.5% 1/8 W (V14674) (SPN 2500169-527)		1
	79	NA4-26100PMD	.RESISTOR,FILM 26,100 OHMS ±0.5% 1/8 W (V14674) (SPN 2500169-528)		1
	80	NA4-27400PMD	.RESISTOR,FILM 27,400 OHMS ±0.5% 1/8 W (V14674) (SPN 2500169-530)		1
	81	NA4-30100PMD	.RESISTOR,FILM 30,100 OHMS ±0.5% 1/8 W (V14674) (SPN 2500169-534)		1

FIG. ITEM	PART NUMBER	NOMENCLATURE 1234567	EFF CODE	UNITS PER ASSY
27 82	NA4-33200PMD	.RESISTOR,FILM 33,200 OHMS ±0.5% 1/8 W (V14674) (SPN 2500169-538)		6
83	NA4-36500PMD	.RESISTOR,FILM 36,500 OHMS ±0.5% 1/8 W (V14674) (SPN 2500169-542)		1
84	NA4-40200PMD	.RESISTOR,FILM 40,200 OHMS ±0.5% 1/8 W (V14674) (SPN 2500169-546)		2
85	NA4-48700PMD	.RESISTOR,FILM 48,700 OHMS ±0.5% 1/8 W (V14674) (SPN 2500169-554)		1
86	NA4-49900PMD	.RESISTOR,FILM 49,900 OHMS ±0.5% 1/8 W (V14674) (SPN 2500169-555)		14
87	NA4-68100PMD	.RESISTOR,FILM 68,100 OHMS ±0.5% 1/8 W (V14674) (SPN 2500169-568)		1
88	NA4-95300PMD	.RESISTOR,FILM 95,300 OHMS ±0.5% 1/8 W (V14674) (SPN 2500169-582)		4
89	NA4-0-100PMD	.RESISTOR,FILM 0.100 MEGO ±0.5% 1/8 W (V14674) (SPN 2500169-584)		20
90	NA4-0-121PMD	.RESISTOR,FILM 0.121 MEGO ±0.5% 1/8 W (V14674) (SPN 2500169-592)		1
91	NA4-0-147PMD	.RESISTOR,FILM 0.147 MEGO ±5% 1/8 W (V14674) (SPN 2500169-600)		1
92	NA4-0-165PMD	.RESISTOR,FILM 0.165 MEGO ±0.5% 1/8 W (V14674) (SPN 2500169-605)		1
93	NA4-0-200PMD	.RESISTOR,FILM 0.200 MEGO ±0.5% 1/8 W (V14674) (SPN 2500169-613)		3
94	NA4-0-221PMD	.RESISTOR,FILM 0.221 MEGO ±0.5% 1/8 W (V14674) (SPN 2500169-617)		1
95	NA4-0-261PMD	.RESISTOR,FILM 0.261 MEGO ±0.5% 1/8 W (V14674) (SPN 2500169-624)		1

FIG. ITEM	PART NUMBER	NOMENCLATURE 1234567	EFF CODE	UNITS PER ASSY
27 96	NA4-0-340PMD	.RESISTOR,FILM 0.340 MEGO ±0.5% 1/8 W (V14674) (SPN 2500169-635)		1
97	NA4-0-412PMD	.RESISTOR,FILM 0.412 MEGO ±0.5% 1/8 W (V14674) (SPN 2500169-643)		1
98	NA4-0-442PMD	.RESISTOR,FILM 0.442 MEGO ±0.5% 1/8 W (V14674) (SPN 2500169-646)		1
99	NA4-0-487PMD	.RESISTOR,FILM 0.487 MEGO ±0.5% 1/8 W (V14674) (SPN 2500169-650)		1
100	NA4-0-499PMD	.RESISTOR,FILM 0.499 MEGO ±0.5% 1/8 W (V14674) (SPN 2500169-651)		8
101	GE10-1	.RESISTOR,FILM 1 MEGO ±2% 1/8 W (V80031) (SPN 2500482-1)		2
102	RCR07G220JR	.RESISTOR,COMPOSITION 22 OHMS ±5% 1/4 W (SPN 2500932-9)		1
103	RCR07G510JR	.RESISTOR,COMPOSITION 51 OHMS ±5% 1/4 W (SPN 2500932-18)		18
104	RCR07G101JR	.RESISTOR,COMPOSITION 100 OHMS ±5% 1/4 W (SPN 2500932-25)		2
105	RCR07G102JR	.RESISTOR,COMPOSITION 1000 OHMS ±5% 1/4 W (SPN 2500932-49)		2
106	RCR07G122JR	.RESISTOR,COMPOSITION 1200 OHMS ±5% 1/4 W (SPN 2500932-51)		2
107	RCR07G152JR	.RESISTOR,COMPOSITION 1500 OHMS ±5% 1/4 W (SPN 2500932-53)		1
108	RCR07G472JR	.RESISTOR,COMPOSITION 4700 OHMS ±5% 1/4 W (SPN 2500932-65)		2
109	RCR07G622JR	.RESISTOR,COMPOSITION 6200 OHMS ±5% 1/4 W (SPN 2500932-68)		2

FIG. ITEM	PART NUMBER	NOMENCLATURE 1234567	EFF CODE	UNITS PER ASSY
27 110	RCR07G103JR	.RESISTOR,COMPOSITION 10,000 OHMS ±5% 1/4 W (SPN 2500932-73)		1
111	NA4-5110PMD	.RESISTOR,FILM 5110 OHMS ±0.5% 1/8 W (V14674) (SPN 2500169-460)		7
112	RW81U1R00F	.RESISTOR,WIREWOUND 1 OHMS ±1% 1 W (SPN 2501300-25)		2
113	RW81U1R30F	.RESISTOR,WIREWOUND 1.3 OHMS ±1% 1 W (SPN 2501300-28)		2
114	RWRW81U4R30F	.RESISTOR,WIREWOUND 4.3 OHMS ±1% 1 W (SPN 2501300-40)		2
115	RW81U20R0F	.RESISTOR,WIREWOUND 20 OHMS ±1% 1 W (SPN 2501300-56)		2
116	RLR20C1201GR	.RESISTOR,FILM 1200 OHMS ±2% 1/2 W (SPN 2501470-51)		1
117	4014168-909	.RESISTOR ASSORTMENT (SELECT A RESISTANCE VALUE FROM 10 OHMS THRU .499 MEGOHMS AS SPN 2500169-200 THRU 2500169-651 AND 0.51 MEGOHMS THRU 22.0 MEGOHMS AS SPN 2500932-114 THRU 2500932-153)		11
118	NA4-0-332PMD	.RESISTOR,FILM 0.332 MEGO ±0.5% 1/8 W (V14674) (SPN 2500169-634)		1
119	10463-1DAP	.PAD (V07047) (SPN 2500185-1)		18
120	10462-1DAP	.PAD (V07047) (SPN 2500185)		25
121	516	.SPACER (V53101) (SPN 2504155-7)		24
122	NA4-0-150PMD	.RESISTOR,FILM 0.150 MEGO ±0.5% 1/8 W (V14674) (SPN 2500169-601)		1

www.manualsplus.com
1037045